Standard Schedules Information Manual

Issued March 2013

International Air Transport Association
Montreal—Geneva

23rd Edition

NOTICE

DISCLAIMER. The information contained in this publication is subject to constant review in the light of changing government requirements and regulations. No subscriber or other reader should act on the basis of any such information without referring to applicable laws and regulations and/or without taking appropriate professional advice. Although every effort has been made to ensure accuracy, the International Air Transport Association shall not be held responsible for any loss or damage caused by errors, omissions, misprints or misinterpretation of the contents hereof. Furthermore, the International Air Transport Association expressly disclaims any and all liability to any person or entity, whether a purchaser of this publication or not, in respect of anything done or omitted, and the consequences of anything done or omitted, by any such person or entity in reliance on the contents of this publication.

© International Air Transport Association. All Rights Reserved. No part of this publication may be reproduced, recast, reformatted or transmitted in any form by any means, electronic or mechanical, including photocopying, recording or any information storage and retrieval system, without the prior written permission from:

Senior Vice President
Marketing and Commercial Services
International Air Transport Association
800 Place Victoria
P.O. Box 113
Montreal, Quebec
CANADA H4Z 1M1

Standard Schedules Information Manual
Material No.: 9179-23
ISBN 978-92-9252-135-6
© 2013 International Air Transport Association. All rights reserved.
Montreal—Geneva

Table of Contents

	Page
Foreword	v
Summary of Changes	vi
Introduction	viii
The Objectives of the Manual	ix
The Benefits of Implementation	ix
Amendment Procedure	x
Description of the Contents—the Chapters	x
Appendices to the SSIM	xi
Attachments to the SSIM	xiii
Chapter 1—DEFINITIONS	1
Chapter 2—INFORMATION REQUIRED FOR STANDARD SCHEDULES	7
Chapter 3—STANDARD PRINT LAYOUTS FOR SCHEDULES INFORMATION	103
Chapter 4—STANDARD SCHEDULES MESSAGE PROCEDURE	107
Chapter 5—AD HOC SCHEDULES MESSAGE PROCEDURE	165
Chapter 6—AIRPORT COORDINATION PROCEDURES	221
Chapter 7—PRESENTATION AND TRANSFER OF A SCHEDULE DATA SET	373
Appendix A—IATA Aircraft Types	383
Appendix B—Meal Service Codes	415
Appendix C—Service Types	417
Appendix D—Passenger Terminal Indicators	419
Appendix E—Reject Reason	435
Appendix F—UTC—Local Time Comparisons and ISO Two Letter Country Codes	439
Appendix G—Traffic Restriction Codes Table	457
Appendix H—Explanatory Notes on SSIM Applications	461
Appendix I—Region Codes	511
Appendix J—Information Codes for Use in the Airport Coordination Process	527
Appendix K—General Aviation Slot Clearance Request	529
Appendix X—IATA PADIS XML Standards	541
Attachment 1—SISC Participants	545
Section I—Airline Members	545
Section II—Non-Airline Observers	552

Attachment 2—Participants in IATA Slot Conferences 557
Section I—Airlines 557
Section II—Airport Coordinators and Facilitators 594
Section III—Non Airline Contacts 606
Attachment 3—MCT Coordinator Contacts 609

FOREWORD

The Standard Schedules Information Manual (SSIM) is constituted under IATA Passenger Services Conference Recommended Practice 1761b that was declared effective on 01 July 1972.

The Manual is designed to help originators and recipients of schedule information in terms of electronic data processing and message procedures. Its use is encouraged for all IATA Member airlines and their business partners as the standard for the exchange of Slot and Scheduling information throughout the industry.

This issue of the Standard Schedules Information Manual (SSIM) is effective as of 01 March 2013. △

SSIM is published on a yearly basis in March.

Further information on SSIM, Schedules Information Standards Committee (SISC) and related scheduling matters can be obtained from the IATA Internet site at www.iata.org/slotlink. All SSIM enquiries are to be forwarded to SSIM@iata.org.

△ SUMMARY OF CHANGES

Important Information

The following is a summary of the main enhancements reflected in this issue:

Chapter/Section	Explanation
Introduction	• Addition of Appendix K—General Aviation Slot Clearance Request (GIR)
Chapter 2	• Meal Service Segment Override DEI 111: Changes to text with regard to usage with DEI 101 • Traffic Restriction Code Information—Free Format DEI 713–799: removal from SSIM • Plane Change without Aircraft Type Change (DEI 210): Change to add extra example of usage
Chapter 6	• SSIM 6.8.1 Flow Diagram: Changes to amend the diagram • Passenger Terminal Indicators: Changes to include Passenger Terminal Identifiers in SAL and SMA messages • WSG & SSIM consistency: 6.6.4 text change to match WSG & SSIM
Appendix A	• Manufacturer and Aircraft Names updated—the numerous amendments have no change symbol indication • New Aircraft Types (group codes): 32C(32S); 32D(32S); CS9(CS9); EC5(EC5); TRS(TRN) • Revised Aircraft Types (group codes): G2B(GRJ); G2S(GRJ); GJ2(GRJ); GJ3(GRJ); GJ4(GRJ); GJ5(GRJ); GJ6(GRJ); GR1(GRJ); GR2(GRJ); GR3(GRJ); MA6(MA6); TRN(TRN) • Deleted Aircraft Types: AT5(ATR); ATD(ATR)
Appendix D	• Enhancements reflecting the new Worldwide Slot Guidelines (WSG) principle amendments in terminology • New entries: ACC—Accra; CTU—Chengdu; DAL—Dallas; GDN—Gdansk; GRU—Sao Paulo; IEV—Kiev; KIX—Osaka; KTW—Katowice; MPM—Maputo; SHE—Shenyang; SJD—San Jose Del Cabo; VTE—Vientiane • Revised entries: BOM—Mumbai; CNS—Cairns; OVB—Novosibirsk; PER—Perth; XIY—Xi An • Deleted entries: ALC—Alicante; BUD—Budapest Terminal 1; KBP—Kiev Terminal A; LAS—Las Vegas Terminal 2; ORD—Terminal 4; SIN—Budget Terminal; WAW—Warsaw • Content reflects changes up to Notification message APP/D/013/16JAN13

Chapter/Section	Explanation
Appendix F	• Amendment of ISO Palestine country name • Content reflects changes up to Notification message APP/F/015/08FEB13
Appendix I	• Amendment of ISO Palestine country name
Appendix K	• GIR message: Modification of GIR message • T Action Code: Editorial change
Appendix X	• IATA PADIS XML: Text updated

To facilitate identification of changes from the previous issue, the position and kind of change is indicated by a symbol on the margin of the page.

When the change affects a major part or all of any chapter, appendix or page, the symbol will be placed at its heading.

If a change involves a single paragraph, sentence or line, the symbol will appear beside the item concerned.

The following symbols are used:

☐—Revised and/or inclusion of additional text;

△—Editing change only;

⊗—Deleted text, appears normally between two lines.

Any suggestions for changes or additional subjects that you would like to be incorporated into future editions, should be addressed to the IATA Management (E-mail: SSIM@iata.org).

INTRODUCTION

Airline schedules data (timetable information) is distributed throughout the airline industry to a growing number of recipients such as airline reservations systems, timetable agencies, airline partnerships, traffic handling agencies, airport coordinators, air traffic control authorities and Government departments.

Airline schedules data is initially associated with airline reservations and ticketing systems and subsequently with the exchange of other data required for timetable planning and production, and for airline operational purposes.

It is recommended that at least 360 days of advance schedules data, including Minimum Connect Time data, should be distributed on an equal basis to all schedules aggregators, reservations and ticketing systems in which a carrier participates, to maximise the efficiencies of such systems.

Due to the ever-increasing volume of data being exchanged, the industry requires speedier and more efficient methods of exchanging this data.

The airlines considered it essential that compatible timetable systems needed to be developed to ensure that airline timetable information was exchanged on a cost-effective basis within the airline industry. As such, all parties have needed to make use of computer facilities and established procedures to ease the burden of handling the significant amounts of data being exchanged within the industry.

To facilitate the exchange of data, the IATA Member Airlines initiated the development of an official set of Recommended Practices to guide the industry along mutually compatible lines for schedule/slot data handling procedures. These Recommended Practices and associated industry code sets are published in the Standard Schedules Information Manual (SSIM).

The responsibility for maintaining the Standard Schedules Information Manual (SSIM) is mandated to the Schedules Information Standards Committee (SISC).

The Schedules Information Standards Committee (SISC) is established by the IATA Passenger Services Conference (PSC) with the following Terms of Reference:

- Develop and maintain a set of common standards for the exchange of schedule/slot data, including industry standard code sets for a variety of schedule related data elements;
- Review and propose amendments to SSIM Appendix A (IATA Aircraft Types); Appendix D (Passenger Terminal Indicators); Appendix F (UTC—Local Time Comparisons) and Appendix I (Region Codes);
- Disseminate and encourage the use of common schedule/slot data handling procedures and standard formats for the exchange of schedule/slot information as published in the Standard Schedules Information Manual (SSIM);
- Liaise with other IATA committees and working groups, in particular the Slot Policy Working Group (SPWG), as well as other organisations as appropriate to meet changing industry requirements and to further the objectives of the SISC;
- The Joint Slot Advisory Group (JSAG) will ensure formal liaison between the airport coordinator community and SISC;
- SISC will provide an annual report to the PSC comprising all proposed and adopted changes to SSIM. In addition a written report of the work of SISC will be made to the Heads of Delegation Meeting of the regularly scheduled IATA Slot Conferences;
- The PSC will be responsible for final endorsement of proposed changes to SSIM;
- Participation is by schedules specialists from IATA airlines and industry experts in the IATA Strategic Partnership programme;

- A rapporteur will be established to provide liaison for non-IATA airlines participating in the Slot Conference;
- Airport Coordinators participating in the IATA Slot Conference are invited to participate in SISC.

The Objectives of the Manual

The primary objective of the Manual is to provide the airline industry with an official set of neutral Recommended Practices to guide the industry along mutually compatible lines in the development of schedule/slot data handling procedures.

The secondary objective is to achieve the highest possible degree of standardisation in technique, format and conventions and to incorporate, to the maximum possible extent, all relevant IATA standards and Recommended Practices in common use.

The Manual does not dictate the way in which airlines, or other organisations, should handle their own internal schedule information. It aims to set common standards for external exchanges; each individual organisation will determine the extent to which it will adopt SSIM standards internally.

It is very important to maintain a degree of flexibility of expression in all the media described in the subsequent Chapters. Rigid rules describe the presentation of the fixed basic data elements, but provision has been made for the inclusion of additional explanatory data in Variable Data Elements. This facilitates clarification or enlargement of the fixed data, or the addition of specialised information not otherwise allowed for in the SSIM standards. It is believed that this will help many potential users.

The ultimate objective, of course, is that the Manual should be widely disseminated and used throughout the world. IATA is actively pursuing this aim and a growing number of airlines and agencies have already implemented many of the recommendations in the Manual.

The Benefits of Implementation

As increasing use is made of these practices, significant benefits will accrue to the industry; some of these are:

(a) faster more efficient input procedures will save manpower and time for both airlines and agencies;

(b) timetable agency publication lead times will reduce making it possible to include more up-to-date information;

(c) the “down” time of computer reservations systems for updating processes will be very greatly reduced;

(d) new season's timetables will be processed faster and more accurately and can be updated much more efficiently;

(e) airlines or agencies with computer facilities adapted to handle information in the standard format will be able to process and forward this information on behalf of airlines which do not have such facilities;

(f) the wider the recommended practices are implemented, the more feasible it becomes to set up schedule data banks for many analytical purposes;

(g) the exchange and consolidation of computerised timetable data will greatly facilitate operational control, airport and airspace coordination, both on a day-to-day basis and for future seasons. This will also facililitate fast-time ATC Simulation.

This Manual is the first step towards realisation of these benefits that are considered essential for maximum efficiency and cost effectiveness in the air transport industry.

Note: *All SSIM Chapters provide for the use of three-letter Airline Designators.*

Amendment Procedures

Once a new Issue of the Standard Schedules Information Manual (SSIM) has become effective, new business requirements and amendments must follow PSC adoption procedures in order to be included in the next issue of the SSIM.

All proposals to amend the SSIM shall be addressed to SSIM@iata.org using the agenda template from the SISC webpage for consideration by the next meeting of the SISC. SISC Participants are listed in Attachment 1.

Proposed amendments to SSIM discussed and agreed at SISC will be submitted to the PSC for adoption.

SSIM amendments will be circulated to the PSC accredited representatives who will be given 30 days to comment on any proposal. If a majority of votes received from industry representatives agree with the standards, they will be adopted.

All agreed amendments become effective on the date recommended and shall be published in the next issue of SSIM, promulgated as RP 1761b.

Additionally, a report on the amendments to SSIM agreed by SISC will be submitted to JSAG.

A minimum of six months notice shall normally be provided for major amendments. However, for circumstances where a new SSIM business requirement or an amendment necessitates urgent implementation and needs to be addressed between SISC meetings (e.g. a change in government regulation), the following electronic procedure may be used to expedite the change:

- The proposed amendment must be submitted to the SISC Secretary (SSIM@iata.org)
- The proposal will be circulated to the committee for review and approval
- If a majority of votes received from the SISC within 30 days of the proposal being distributed is in agreement, the recommendation to amend SSIM will then follow the PSC Mail Vote Procedure for adoption as an IATA Standard
- SSIM amendments will be submitted to the PSC accredited representatives who will be given 30 days to comment on any proposal. If a majority of votes received from industry representatives agree with the standards, they will be adopted
- Agreed amendments become effective on the date recommended and shall be published as a SSIM Addendum.

All amendments to the SSIM, however published, require the approval of the PSC. Proposed amendments to SSIM Appendix A, D and F shall also be advised to SSIM@iata.org.

Description of the Contents—the Chapters

Chapter 1: Definitions

Chapter 2: Information Required for Standard Schedules

The elements of information essential for the full presentation of airline schedules, are set out in alphabetical order. Construction rules are described and subsequent chapters deal with the formatting of these elements in order to perform specific data transmittal functions.

Chapter 3: Standard Print Layouts for Schedules Information

Two examples of layouts are shown. One of these illustrates a horizontal presentation, which best suits single sector operations, while the other shows a vertical presentation more suitable for multi-sector operations.

These presentations serve as examples of how the minimum data requirements of printed schedules can be arranged to create printed schedules used for interline exchange, information and working purposes, particularly at IATA Slot Conferences.

Chapter 4: Standard Schedules Message Procedure

Some schedule information is passed between airlines and to timetable agencies by telegraph message. The standard telegraph message format described is mainly used for amendment to previously disseminated schedules; such amendments may cover long term or short term periods.

The format, although primarily aimed at automated handling, can also be manually interpreted and will be of more general interest, since the recommended practice is not dependent on automation.

Chapter 5: Ad Hoc Schedules Message Procedure

This is an extension of Chapter 4, to cover “ad hoc” or “occasional” changes to established and previously disseminated schedules, but which affect a flight on single dates. Such an “ad hoc” change of plan may be notified at any stage in advance of the operation and may refer to an “extra” flight.

In the case of a previously advised flight, it may reflect the cancellation of the whole or part of a flight, or a change of routing, timing, equipment or configuration.

The telegraph message formats described in this chapter are intended to cover a wider variety of planning and operations control functions than are necessary in the case of the more basic schedule changes covered in the previous chapter.

It should be noted that procedures for the reporting of unplanned eventualities such as diversions are covered in the IATA Airport Handling Manual.

Chapter 6: Airport Coordination Movement Procedures

Standard procedures are recommended where it is necessary to obtain clearance or provide information of schedule times of arrival and departure.

Submissions may be by telegraph or email message. A standard layout, which covers both telegraph and email, is described.

Chapter 7: Presentation and Transfer of a Schedule Data Set

The current standards to be applied for the exchange of complete schedules for processing by computerized systems are described.

It is used as the main method of bulk transfer of full schedules between those airlines and agencies who are developing schedule databases and scheduling systems, built around the use of computers.

This schedule transfer also involves other organisations, such as air traffic control authorities and timetable agencies.

Appendices to the SSIM

Appendices cover the basic table data commonly employed in airline scheduling and general information which users will find useful.

Appendix A—IATA Aircraft Types

This comprises encoding and decoding lists for current (and future) operational aircraft. The codes are the standard IATA 3-character codes.

In normal circumstances the Subtype Code should be used. However, this does not preclude the use of the more commonly understood General Designator for publication purposes.

Appendix B—Meal Service Codes

Coding of the Meal Service Codes that indicate meal services provided on each flight leg.

Appendix C—Service Types

Coding list of the Service Types for the classification of a Flight or Flight Leg as well as the type of service provided.

Appendix D—Passenger Terminal Indicators

Coding of Passenger Terminals at airports having more than one terminal.

Appendix E—Reject Reason

Standard texts to be used as Reject Reason on SSM and ASM messages.

Appendix F—UTC–Local Time Comparisons and ISO Two Letter Country Codes

The time differences from UTC for all countries of the world are summarised. The list includes the periods of validity of Daylight Saving Time where applicable.

The list is updated periodically.

This Appendix includes ISO 2-letter country codes, and a decoding list (ISO 3166, as amended).

Appendix G—Traffic Restriction Codes Table

Coding of all Traffic Restriction codes and their associated appropriate texts.

Appendix H—Explanatory Notes on SSIM Application

Currently this Appendix gives the user of SSIM useful information on how to deal with the following subjects:

- Ad Hoc Schedules Messages in the Operations Control Environment
- Airline Seating Description
- Clearances/Movement Advices for Flights Partly out of Scheduling Season
- Commercial Agreements Between Two or More Airlines
- Daylight Saving Time
- Defaults
- Duplicate Flight Legs
- Electronic Ticketing Information
- Fictitious Points
- Legs/Segments
- Minimum Connecting Time
- Partial Cancellation of Flights
- Partnership Specification
- Time Mode
- Traffic Restriction Codes D, E and G
- Traffic Restriction Code Qualifiers 710–712
- Train Stations at Multi-Terminal Airports
- Withdrawal of Ad Hoc Schedule Changes

Appendix I—Region Codes

Coding of Region Codes, and the Countries and US States that constitute these Regions.

This Appendix includes ISO 2-letter country codes and IATA TC areas.

Appendix J—Information Codes for Use in the Airport Coordination Process

Coding of Information Codes for Additional Information Codes, Coordinator Reason Codes (SAL/SAQW/SCR) and Coordinator Reason Codes (SHL).

Appendix K—General Aviation Slot Clearance Request (GIR)

This appendix provides standard procedures for the application for slots at Level 3 airports by General Aviation operators.

Appendix X—IATA PADIS XML Standards

References to IATA PADIS XML Standards.

Attachments to the SSIM

Attachment 1—SISC Members and Observers

A list of the names, titles and contact details of airline and non-airline participants to the Schedules Information Standards Committee (SISC).

Attachment 2—Participants in IATA Slot Conferences

A list of the names, titles and contact details of main participants in IATA Slot Conferences in three Sections:

Section I—Airlines

Section II—Airport Coordinators and Facilitators

Section III—Non-Airline Contacts

Attachment 3—MCT Coordinator Contacts

A list of names, titles and contact details of Minimum Connecting Time Coordinators of scheduled carriers.

CHAPTER 1—DEFINITIONS

1.1 Definitions

‘AD HOC SCHEDULE’—A variation, addition or cancellation from the basic schedule of one or more flights on single dates.

‘ADMINISTRATING CARRIER’—The airline that has the financial and commercial responsibility of a flight and that may or may not be the Operating Carrier.

‘AHC’—Airport Handling Committee (IATA).

‘AHM’—Airport Handling Manual (IATA).

‘AIRCRAFT’—A transport vehicle which is certified as airworthy by a competent aeronautical authority. As used herein, the definition may include surface vehicles, the bookings and traffic handling for which are dealt with in a similar manner to that used for aircraft.

‘AIRCRAFT CONFIGURATION’—Planned utilisation layout of aircraft interior space.

‘AIRIMP’—Reservations Interline Message Procedures'—Passenger (A4A/IATA).

‘ALL-CARGO AIRCRAFT’—A version of an aircraft type which carries cargo and mail only.

‘ARINC’—Aeronautical Radio Incorporated.

‘A4A’—Airlines for America.

‘BASIC SCHEDULE’—The planned regularly operated flights of an airline.

‘BOARD POINT’—Station of embarkation.

‘BOOKING’—See RESERVATION.

‘BULKHEAD’—A rigid partition.

‘BUSINESS DAYS’—In the context of Airport Coordination/Advice Procedures, business days refers to business days in the country of the message originator.

‘CABIN’—A compartment where passenger seats are installed.

‘CARGO’—Any goods carried on an aircraft and covered by an air waybill.

‘CHANGE OF EQUIPMENT EN ROUTE’—A scheduled change of aircraft, occurring one or more times en route, but identified by one Airline Designator/Flight Number between the Station of origin and the Station of final destination.

→ *For further guidance, see also Appendix H: Duplicate Flight Legs.*

‘CHANGE OF GAUGE EN ROUTE’—See CHANGE OF EQUIPMENT EN ROUTE.

‘CITY PAIR’—See SEGMENT.

‘CLASS’—Seating of passengers based on fare paid or facilities and services offered.

‘CODE SHARE FLIGHT’—A generic term referring to various types of operational or commercial arrangements between two or more airlines. See OPERATING AIRLINE DISCLOSURE—CODE SHARE or OPERATING AIRLINE DISCLOSURE—SHARED AIRLINE OR WET LEASE DESIGNATION.

‘COMMERCIAL DUPLICATE’—Refer to OPERATING AIRLINE DISCLOSURE—CODE SHARE.

‘COMPARTMENT’—A space designated within the aircraft for the carriage of passengers or deadload.

‘COMPOSITE FLIGHT’—A flight composed of two or more member flights of any type, but which is identified with an Airline Designator/Flight Number combination different from any of its member flights.

→ *For further guidance, see also Appendix H: Duplicate Flight Legs.*

‘CONDITIONAL’—The status of a data element, composite data element, simple data element or component data element, marked C, which becomes mandatory under certain circumstances which have to be specified. May be omitted if these circumstances do not prevail.

‘CONFIGURATION’—See AIRCRAFT CONFIGURATION.

‘CONNECTION’—(Also known as TRANSFER) The ability to transfer passengers, baggage, cargo or mail from one flight to another within a reasonable time period. On-line connections concern transfers between flights of the same airline designator and interline connections between flights of different airline designators.

‘CONTAINER’—See UNIT LOAD DEVICE.

‘COORDINATOR’—Natural or legal person with detailed knowledge of airline scheduling coordination, responsible for the allocation of slots at a coordinated airport.

‘DATA’—A representation of facts, concepts or instructions in a formalised manner suitable for communication, interpretation or processing by human beings or by automatic means.

‘DATA ELEMENT’—A data element is a sequence of alpha-numeric characters which, depending on their specific context and position, has a unique meaning, e.g. Flight Designator, Days of Operation.

‘DOMESTIC FLIGHT LEG’—A flight between two stations to which the same ISO country code applies.

‘DUPLICATE LEG’—A single, non-operational, leg of a flight that, for commercial/technical reasons, is displayed under more than one Flight Number by the operating carrier, or is displayed by a different Airline Designator/Flight Number by an airline other than the operating carrier.

→ *For further guidance, see also Appendix H: Duplicate Flight Legs.*

‘EN ROUTE’—(Equivalent to “THROUGH”). Between station of origin and station of destination.

‘FACILITATOR’—A person appointed by the appropriate authority to collect and review airline schedules at Level 2 airports, and to facilitate adjustments to the planned operations if necessary.

‘FICTITIOUS POINT’—A Location Identifier reserved for the purpose of schedule construction to overcome day/date duplication and to describe legs with elapsed times greater than 23 hours 59 minutes.

‘FLIGHT’—The operation of one or more legs with the same Flight Designator.

‘FUNNEL FLIGHT’—(Also known as COMPLEXING, STARBURST, W or Y FLIGHTS) A flight composed of two or more member flights which is identified by the Airline Designator and Flight Number of one of the members. Only one Airline Designator/Flight Number is operational on any one leg, but a leg may have multiple, non-operational Flight Numbers.)

→ *For further guidance, see also Appendix H: Duplicate Flight Legs.*

‘HARD COPY’—A paper record of information stored or relayed.

‘HISTORIC (SLOT)’—A slot that has been allocated to, and operated by, an airline in one scheduling season which can be claimed again in the next equivalent season, subject to certain operating criteria.

‘IATA’—International Air Transport Association.

‘ICAO’—International Civil Aviation Organization.

‘IDENTIFIER’—A character or group of characters used to identify or name an item of data and possibly to indicate certain properties of that data.

‘INTERNATIONAL FLIGHT LEG’—A flight leg between two stations to which different ISO country codes apply.

‘ISO’—International Organisation for Standardisation.

‘ITINERARY’—A single flight or a series of identical flights defined by a continuous Period and Days of Operation (and Frequency Rate if applicable), each of which consists of one or more contiguous legs which, taken together, describe the complete routing of that flight.

‘JOINT OPERATION FLIGHT’—A flight on which more than one airline operates one or more of its legs. Only one Flight Designator exists for each operating flight.

‘JSAG’—Joint Slot Advisory Group.

‘LEG’—The operation between a departure station and the next arrival station.

‘LEVEL 1’—Airports where the capacity of the airport infrastructure is generally adequate to meet the demands of airport users at all times.

‘LEVEL 2’—Airports where there is potential for congestion during some periods of the day, week, or season which can be resolved by voluntary cooperation between airlines.

‘LEVEL 3’—Airports where capacity providers have failed to develop sufficient infrastructure, or where governments have imposed conditions that make it impossible to meet demand.

‘MAIL’—All types of material communications carried on an aircraft, e.g. General Post Office mail, diplomatic mail, military mail and company (airline) mail.

‘MANDATORY’—The status of a data element, composite data element, simple data element or component data element, marked M, containing information which forms a fundamental part of the procedure and must always be included.

‘MARKETING CARRIER’—The carrier that sells with its own code as part of a code-share agreement on a flight actually operated by another carrier.

‘MCT’—Minimum Connecting Time.

→ *For further guidance, see also Appendix H: Minimum Connecting Time.*

‘NON-OPERATIONAL (COMMERCIAL) LEG’—See OPERATIONAL LEG.

‘OFF POINT’—Station of disembarkation.

‘ON-LINE CONNECTION’—see CONNECTION.

‘OPERATING AIRLINE DISCLOSURE—CODE SHARE’—A flight where the operating airline allows seats/space to be sold by one or more other airlines and all participants to such an agreement sell their seats/space on that flight under their own Flight Designator. More than one Flight Designator is used for a single operating flight, including at least one with the Airline Designator of the operating airline, and at least one with the Airline Designator of a non-operating airline. Also refer to CODE SHARE or OPERATING AIRLINE DISCLOSURE—SHARED AIRLINE OR WET LEASE DESIGNATION.

‘OPERATING AIRLINE DISCLOSURE—SHARED AIRLINE OR WET LEASE DESIGNATION’—A flight designated by a Flight Designator of one airline but operated by another airline on its behalf as part of a commercial agreement, for example, franchise/commuter style operations. Only the Airline Designator of the first (non-operating) airline is used in the Flight Designator(s) of the operating flight. Also refer to CODE SHARE or OPERATING AIRLINE DISCLOSURE—CODE SHARE.

‘OPERATING CARRIER’—The Carrier that holds the Air Operator's Certificate for the aircraft used for that flight.

‘OPERATION’—The act of a transport vehicle travelling from point to point.

‘OPERATIONAL LEG’—A flight leg which is physically operated and identified by its Airline Designator and Flight Number. Any other Airline Designators and/or Flight Numbers associated with the same flight leg are considered to be non-operational flight legs.

→ *For further guidance, see also Appendix H: Duplicate Flight Legs.*

‘OPTIONAL’—The status of a data element, marked O, which may be omitted if not required by the carrier or by Governmental regulations. Omission of this element is independent of all other elements and does not have any effect on other elements.

‘ORIGINATING FLIGHT’—A flight designated by a Flight Designator, commencing at the station in question.

‘PASSENGER’—Any person carried on an aircraft and covered by a ticket.

‘PSC’—Passenger Services Conference (IATA).

‘PRM’—Passenger Reservations Manual (IATA).

‘QUALIFIER’—A data element whose value, extracted from a code list, gives specific meaning to the function of another data element or a segment.

‘RESERVATION’—(Equivalent to the term “BOOKING”). The allotment in advance of seating or sleeping accommodation for a passenger or of space or weight capacity for baggage, cargo or mail.

‘RESERVATIONS CONTROL CARRIER’—The airline which controls the reservations for a flight.

‘ROTATION’—The operation of consecutive legs with the same aircraft irrespective of the Flight Designator(s).

‘ROUTING’—A list of consecutive legs in operational sequence between the station of origin and the station of destination of any flight.

‘SCR (SLOT CLEARANCE REQUEST/REPLY)’—Standard message used by airlines and coordinators, for planning purposes for the clearance of flights at Level 3 airports. SCRs should not be used to notify coordinators of on-the-day operational variations.

‘SECTOR’—See LEG.

‘SEGMENT’—(Sometimes referred to as CITY PAIR) The operation between board point and any subsequent off point within the same flight.

‘SHARED AIRLINE DESIGNATION FLIGHT’—refer to OPERATING AIRLINE DISCLOSURE—SHARED AIRLINE OR WET LEASE DESIGNATION.

‘SISC’—Schedules Information Standards Committee (IATA).

‘SITA’—Société Internationale de Télécommunications Aéronautiques.

‘SLOTLINK’—IATA Sharepoint Extranet site workspace dedicated to Airline Scheduling activities. Link: www.iata.org/slotlink

‘SLOT’—The scheduled time of arrival or departure available for allocation by, or as allocated by, a coordinator for an aircraft movement on a specific date at a Level 3 airport. An allocated slot will take account of all the scheduling limitations at the airport e.g. runway(s), taxiways, aircraft parking stands, gates, terminal capacity (e.g. check-in and baggage delivery), environmental constraints e.g. surface access etc.

‘SC (SLOT CONFERENCE)’—A forum organised by IATA for the coordination of airline schedules held twice yearly to coincide with the commercial aviation industry's two scheduling seasons.

‘SPWG’—Slot Policy Working Group.

‘SSIM’—Standard Schedules Information Manual (IATA).

‘STATION’—A place to which a Location Identifier has been assigned.

‘STOPOVER’—(Equivalent to the term “BREAK OF JOURNEY”) A deliberate interruption of a through journey by the passenger at a station between the station of initial origin and the station of ultimate destination.

‘SYSTEMS AND COMMUNICATIONS REFERENCE (SCR)’—A multi-volume set of documents which describe the protocols, standards and implementation issues related to inter-system communications for the airline and aeronautical communities. The SCR volumes are made available within the PADIS extranet site: www.iata.org/padis.

‘TECHNICAL LANDING’—A landing for non-traffic purposes.

‘TERMINATING FLIGHT’—A flight, designated by a Flight Designator, ending at the station in question.

‘TRANSFER’—See CONNECTION.

‘TRANSIT FLIGHT’—A flight, designated by a Flight Designator, during an en route landing at the station in question.

‘TRANSIT STATION/AIRPORT’—A scheduled en route stopping station on a flight.

‘TRANSIT TIME’—The time an aircraft remains in transit at the station in question.

‘TRIP’—The flight(s) that form the total route of a specific origin and destination. A single trip can be served by one or multiple carriers.

‘TURNAROUND’—The station in an aircraft rotation, where the flight number changes.

‘UN/ECE’—United Nations Economic Commission for Europe.

‘UNIT LOAD DEVICE’—A load carrying device which interfaces directly with aircraft loading and restraint systems and meets all restraint requirements without the use of supplementary equipment. As such, it becomes a component part of the aircraft. The device can be either a combination of components or one complete structural unit. A combination unit is an aircraft pallet plus net plus non-structural igloo, or pallet plus net. A structural unit is a lower deck or a main deck cargo container, or a structural igloo assembly.

‘UTC’—Universal Time Coordinated.

‘WAITLIST’—The data from the original slot allocation requests as recorded on the coordinator list of outstanding requests for possible improvement.

‘WET LEASE’—A term when used in SSIM to describe a service that utilizes crew (cabin or cockpit) that is not employed by the administrating carrier.

SSIM formats provide unique data elements that are used in these situations to disclose the aircraft owner/cabin crew/cockpit crew.

‘XML’—XML (extensible markup language)—An open standard for describing data from the W3C. It is used for defining data elements on a Web page and business-to-business documents and has become the format for electronic data interchange and Web services. *See Appendix X for further information*.

CHAPTER 2—INFORMATION REQUIRED FOR STANDARD SCHEDULES

2.1 Data Requirements

When exchanging schedules information, it is essential to standardise the set of data elements used. The main reason for this is that when the information is used in automated systems, the size of investment in computers and communications facilities demands that the appropriate data be processed in these systems. However, manual systems will also benefit from such development.

A data element is in this connection defined as a sequence of alphanumeric, alphabetic or numeric characters that, depending on the specific context, has a unique meaning.

Each individual data element must be described and used in the same way. For the successful automation of schedules information to occur, each data element must imply one and only one meaning to each computer system and individual who uses the data element.

Likewise, it is necessary to set size limits for the data elements and define rules for the construction and interpretation of the contents so that the transmission and processing of the data elements can be conducted in an orderly fashion.

This Chapter contains a presentation of the rules applied when defining data elements and message formats in this manual and when referring to data elements in the procedures presented in this manual, as well as defining terms used by those handling schedules information.

2.2 Data Representation

2.2.1 Character Set

To ensure worldwide transmission of information, the use of principle characters is limited to:

Character	Values	Notes
alpha roman capitals	A—Z	26 alphabetic values
numerals	0—9	10 numeric values
full stop/period	.	1 special character
slash	/	1 special character
minus sign	−	1 special character
plus sign	+	not transmittable in telegraph messages
asterisk	*	not transmittable in telegraph messages

In order to avoid ambiguity in *printed* presentations, fonts must be used that have distinguishable characters to clearly represent the number zero, the capital letters ‘I’ and ‘O’, and the small letter ‘i’.

Type or print techniques employing variable horizontal spacing should be avoided.

2.2.2 Symbols

Formats, layouts and examples are described in this manual by use of the following symbols:

Symbol	Description
a	alphabetic (mandatory)
n	numeric (mandatory)
x	any character (mandatory)
(a)	alphabetic (optional)
(n)	numeric (optional)
(x)	any character (optional)
[·n]	indication of maximum number [n] of repeats of the information contained within parenthesis
→	mandatory space (SP)
(→)	optional space (SP)
<	mandatory carriage return (CR)
≡	mandatory line feed (LF)
ƀ	mandatory blank
0̸	zero

Chapter 7 is a fixed format application.

All data elements must appear in their correct position and blanks are mandatory where appropriate.

2.2.3 Information Separators

The following rules are applied with regard to information separators:

DATA ELEMENTS are separated by a space (→).

LINES OF TEXT are separated by a CR immediately followed by LF (<≡).

SUB-MESSAGES, whenever multiple action messages are forwarded within a single telegraph message, they are separated by two slashes immediately followed by the combination CR and LF(// <≡).

Note 1: *In some cases, data within a Data Element is separated by the use of a single slash (/). When a maximum character count applies in the format of such a Data Element, the slash does not constitute a character to be included in that count.*

Note 2: *Two slashes (//) can be used without immediately being followed by the CR and LF characters.*

This applies to some Data Element formats described in this Chapter, and to line wrapping conventions only applicable in Chapter 6.

2.2.4 Data Element Status

In connection with format descriptions, the following symbols are used when stating the status of occurrence for each data element:

M **Mandatory**

A mandatory data element contains information that forms a fundamental part of the data communication and must be included under all circumstances.

C **Conditional**

A conditional data element becomes mandatory under certain conditions that are stated or implied in the Technical Specifications.

The element must be omitted if these conditions do not apply.

The conditions will usually take the form of a dependence on other elements or the existence, alteration or deletion of fundamental data.

The recipient of conditional data may interpret it as optional.

O **Optional**

An optional data element may be omitted if not required.

Omission of the element is independent of all other elements and does not have any effect on these.

— **not permitted**

2.3 Data Elements and Data Element Identifiers

2.3.1 General

The following sections in this Chapter constitute the common reference for all the descriptions in the subsequent Chapters of this Manual.

The characteristics of each data element are defined and are valid throughout the Manual.

They are also independent of the method for communication.

The definition and use of each data element is presented in alphabetical order by means of a **Data Element Glossary** (Section 2.6).

The Glossary also includes certain terms and their definitions deemed necessary for clarity.

When data elements have different formats in different Chapters, the specific formats within each Chapter have been specified.

Examples on the use of each data element are also included within each Chapter.

When appropriate, more than one example is shown for clarity.

Many data elements are identified by means of a numeric **DATA ELEMENT IDENTIFIER (DEI)**.

These data elements normally modify or amplify various other data elements or constitute additional data to the flight.

When a data element is associated with a Data Element Identifier, the appropriate numeric value is identified in the Glossary entry.

It should be especially noted that Data Element Identifiers do not always apply to all Chapters of SSIM.

2.3.2 Relationship Between Data Elements and their Associated Data Element Identifiers

A Data Element Identifier is always related to a data element, except in cases where the Data Element Identifier itself implies the condition.

In general, the Data Element Identifier indicates the type of information explained under the related data element. It is used, where necessary, to modify or amplify various schedule data elements, or add additional ones.

Data Element Identifiers normally have optional status.

However, many of the Data Element Identifiers and associated data elements are conditional, based on the 'conditions' of the schedule.

Examples include Data Element Identifiers below 100 and those associated with traffic restrictions. Others, such as 201 (Subject to Government Approval) and 210 (Plane Change at Board Point without Aircraft Type Change) become essential when such conditions are applicable.

Also, such data elements may be required when, because of technical format limitations, certain information exceeds the field size of the original data element.

An example is Data Element Identifier 106 (Passenger Reservations Booking Designator Exceeding Maximum Length).

To provide complete schedule information, it is strongly recommended that the maximum possible use be made of data elements associated with Data Element Identifiers.

In Chapters 4 and 5 applications, the Data Element Identifier is preceded by the Segment to which it refers (except Data Elements 1–7 and 9) and the data element is preceded by a slash (/).

See the appropriate data element for format rules.

For Chapter 7 application the Data Element Identifier is stated in the Segment Data Record (Record Type 4).

The associated data element (when applicable) is also stated in this record starting in byte 40.

The format for this data element is fixed, i.e. any byte within the format that does not apply has to be filled by a space.

For format rules, see the associated data element in this Chapter.

In some cases, it becomes necessary to express certain data elements that are usually leg related as applying only to a stated segment or group of segments within an itinerary.

The facility to "override" (or replace) the leg related information with alternative information for certain segment(s) is provided by Data Element Identifiers.

For Chapter 7, although no order is prescribed when multiple Data Element Identifiers follow the same Flight Leg Record, the following is recommended:

— when multiple data records apply to different Off Points, the records should be ordered according to the occurrence of the Off Point in the itinerary;

— if multiple data records apply to the same Off Point, they should appear together and be ordered according to the numeric sequence of the Data Element Identifiers starting with the lowest number.

However, systems should be able to process the records in any order.

2.3.3 Listings

The alphabetical listing of all data elements can be found in Section 2.4.1: Alphabetic List.

The numeric listing of all Data Element Identifiers and associated data elements can be found 2.4.1: Numeric List.

2.4 Data Element Listings

2.4.1 Alphabetic List

Data Element	DEI (as applicable)	Applicable (X) Chapters				
		Ch 3	Ch 4	Ch 5	Ch 6	Ch 7
Action Code					X	
Action Identifier			X	X		
Aircraft Configuration/Version (ACV)		X	X	X		X
Aircraft Configuration/Version Exceeding Maximum Length	108		X	X		X
Aircraft Owner	3		X	X		X
Aircraft Owner Specification	113		X	X		X
Aircraft Registration				X		
Aircraft Rotation Layover			X			X
Aircraft Type		X	X	X	X	X
Aircraft Type Publication Override	121		X	X		X
Airline Designator		X	X	X	X	X
Arrival Date					X	
ASM Withdrawal Indicator			X			
Blocked Seats and/or Unit Load Devices	104		X	X		X
Board Point Indicator						X
Cabin Crew Employer	5		X	X		X
Cabin Crew Employer Specification	115		X	X		X
Change Reason				X		
Clearance/Advice Airport					X	
Cleared Time					X	
Cockpit Crew Employer	4		X	X		X
Cockpit Crew Employer Specification	114		X	X		X
Continuation/End Code			X	X		X
Coordinator Reason					X	
Creation Date						X
Creation Time						X
Creator Reference			X	X	X	X
Data Element Identifier			X	X		X
Data Element Identifiers—Free Format Bilateral Use	800–899		X	X		X
Data Element Identifiers—Free Format Internal Use	900–999		X	X		X
Data Set Serial Number						X
Date of Message			X	X	X	
Date Variation			X			X
Day(s) of Operation		X	X		X	X
Departure Date					X	
Destination Station					X	
Duplicate Airline Designator Marker						X
Duplicate Leg Cross Reference—Duplicate Leg Identification	10		X	X		X
Duplicate Leg Cross Reference—Operational Leg Identification	50		X	X		X
Electronic Ticketing Information	505		X	X		X
Error Line			X	X		
Flaglanding at Board Point Only	303		X	X		X
Flaglanding at Off Point Only	301		X	X		X

Data Element	DEI (as applicable)	Applicable (X) Chapters				
		Ch 3	Ch 4	Ch 5	Ch 6	Ch 7
Flaglanding at Off Point and Board Point	302		X	X		X
Flight Designator		X	X	X	X	X
Flight Identifier				X		
Flight Identifier Date				X		
Flight Leg(s) Change Identifier			X	X		
Flight Number		X	X	X	X	X
Flight Number Override	122		X	X		X
Flight Transit Layover						X
Frequency Rate			X		X	X
General Information					X	X
Historic Slot Reason					X	
Incoming Message Reference					X	
In-Flight Service Information	503		X	X		X
Itinerary Variation Identifier (IVI)						X
Itinerary Variation Identifier Overflow						X
Joint Operation Airline Designators	1		X	X		X
Joint Operation Airline Designators Segment Override	125		X	X		X
Leg Sequence Number						X
Meal Service Note	7		X	X		X
Meal Service Note Exceeding Maximum Length	109		X	X		X
Meal Service Segment Override	111		X	X		X
Message Group Serial Number			X	X		
Message Sequence Reference			X	X		
Message Serial Number			X	X		
Minimum Connecting Time International/Domestic Status						X
Minimum Connecting Time International/Domestic Status Override	220		X	X		X
Next Station					X	
Number of Seasons						X
Number of Seats					X	
Off Point Indicator						X
On-Time Performance Indicator	501		X	X		X
On-Time Performance Indicator for Delays & Cancellations	502		X	X		X
Onward Flight	6		X	X		X
Operating Airline Disclosure	127		X	X		X
Operating Airline Disclosure—Code Share	2		X	X		X
Operating Airline Disclosure—Shared Airline or Wet Lease Designation	9		X	X		X
Operational Suffix			X	X	X	X
Origin Station					X	
Overmidnight Indicator					X	
Partnership Specification	11		X	X		X
Passenger Check-In	299		X	X		X
Passenger Reservations Booking Designator (PRBD)		X	X	X		X
Passenger Reservations Booking Designator Exceeding Maximum Length	106		X	X		X
Passenger Reservations Booking Designator Segment Override	101		X	X		X
Passenger Reservations Booking Modifier (PRBM)			X	X		X

Data Element	DEI (as applicable)	Applicable (X) Chapters				
		Ch 3	Ch 4	Ch 5	Ch 6	Ch 7
Passenger Reservations Booking Modifier Exceeding Maximum Length	107		X	X		X
Passenger Reservations Booking Modifier Segment Override	102		X	X		X
Passenger Terminal		X				X
Passenger Terminal Identifier—Arrival	98		X	X	X	
Passenger Terminal Identifier—Departure	99		X	X	X	
Passenger Terminal Segment Override—Arrival	198		X	X		X
Passenger Terminal Segment Override—Departure	199		X	X		X
Period of Operation		X	X		X	X
Period of Schedule Validity						X
Plane Change without Aircraft Type Change	210		X	X		X
Previous Station					X	
Record Serial Number						X
Record Type						X
Reject Reason			X	X		
Release (Sell) Date						X
Request All Reservations	507		X	X		X
Requested Timings					X	
Restricted Payload	105		X	X		X
Schedule Status						X
Schedule Validity Discontinue Date			X			
Schedule Validity Effective Date			X			
Scheduled Time of Aircraft Arrival (Aircraft STA)		X	X	X	X	X
Scheduled Time of Aircraft Departure (Aircraft STD)		X	X	X	X	X
Scheduled Time of Passenger Arrival (Passenger STA)			X	X		X
Scheduled Time of Passenger Departure (Passenger STD)			X	X		X
Season					X	X
Secure Flight Indicator	504		X	X		X
Segment			X	X		X
Segment Information			X	X		
Serial Number Check Reference						X
Service Type		X	X	X	X	X
Standard Message Identifier (SMI)			X	X	X	
Station		X	X	X	X	X
Subject to Government Approval	201		X	X		X
Supplementary Information			X	X	X	
Time Mode			X	X		X
Timing Flexibility Identifier					X	
Title of Contents						X
Title of Data						X
Traffic Restriction Code						X
Traffic Restriction Code Applicable to Cargo Only	172		X	X		X
Traffic Restriction Code Applicable to Cargo/Mail Only	171		X	X		X
Traffic Restriction Code Applicable to Mail Only	173		X	X		X
Traffic Restriction Code Applicable to Passengers Only	170		X	X		X
Traffic Restriction Code Leg Overflow Indicator						X
Traffic Restriction Code Qualifier at Board and Off Points	712		X	X		X
Traffic Restriction Code Qualifier at Board Point	710		X	X		X

Data Element	DEI (as applicable)	Applicable (X) Chapters				
		Ch 3	Ch 4	Ch 5	Ch 6	Ch 7
Traffic Restriction Code Qualifier at Off Point	711		X	X		X
Traffic Restriction Note	8		X	X		
UTC/Local Time Variation						X
UTC/Local Time Variation Specification	97		X	X		

2.4.2 Numeric List

Data Element Identifier	Name of Data Element
1	Joint Operation Airline Designators
2	Operating Airline Disclosure—Code Share
3	Aircraft Owner
4	Cockpit Crew Employer
5	Cabin Crew Employer
6	Onward Flight
7	Meal Service Note
8	Traffic Restriction Note
9	Operating Airline Disclosure—Shared Airline or Wet Lease Designation
10	Duplicate Leg Cross Reference—Duplicate Leg Identification
11	Partnership Specification
50	Duplicate Leg Cross Reference—Operational Leg Identification
97	UTC/Local Time Variation Specification
98	Passenger Terminal Identifier—Arrival
99	Passenger Terminal Identifier—Departure
101	Passenger Reservations Booking Designator Segment Override
102	Passenger Reservations Booking Modifier Segment Override
104	Blocked Seats and/or Unit Load Devices
105	Restricted Payload
106	Passenger Reservations Booking Designator Exceeding Maximum Length
107	Passenger Reservations Booking Modifier Exceeding Maximum Length
108	Aircraft Configuration/Version Exceeding Maximum Length
109	Meal Service Note Exceeding Maximum Length
111	Meal Service Segment Override
113	Aircraft Owner Specification
114	Cockpit Crew Employer Specification
115	Cabin Crew Employer Specification
121	Aircraft Type Publication Override
122	Flight Number Override
125	Joint Operation Airline Designators Segment Override
127	Operating Airline Disclosure
170	Traffic Restriction Code Applicable to Passengers Only
171	Traffic Restriction Code Applicable to Cargo/Mail Only
172	Traffic Restriction Code Applicable to Cargo Only
173	Traffic Restriction Code Applicable to Mail Only
198	Passenger Terminal Segment Override—Arrival
199	Passenger Terminal Segment Override—Departure
201	Subject to Government Approval
210	Plane Change without Aircraft Type Change

Data Element Identifier	Name of Data Element
220	Minimum Connecting Time International/Domestic Status Override
299	Passenger Check-In
301	Flaglanding at Off Point Only
302	Flaglanding at Off Point and Board Point
303	Flaglanding at Board Point Only
501	On-Time Performance Indicator
502	On-Time Performance Indicator for Delays & Cancellations
503	In-Flight Service Information
504	Secure Flight Indicator
505	Electronic Ticketing Information
507	Request All Reservations
710	Traffic Restriction Code Qualifier at Board Point
711	Traffic Restriction Code Qualifier at Off Point
712	Traffic Restriction Code Qualifier at Board and Off Points
800–899	Data Element Identifiers—Free Format Bilateral Use
900–999	Data Element Identifiers—Free Format Internal Use

2.5 Glossary Introduction

The Data Element glossary entry is comprised of one of more of the following components:

- A Data Element Table that includes:
  - The Data Element Name
  - The Data Element Identifier (if applicable)
  - The Data Element Description
  - The Application, Format and Example for each applicable SSIM Chapter
  - Special Characteristics

e.g.

***[Data Element Name]* AIRCRAFT OWNER** **DEI 3**

[Data Element Description] Information provided to whomever it may concern that the flight(s) will be operated with an aircraft not belonging to the fleet of the Administrating Carrier		
Application	**Format**	**Example**
Chapters 4,5	xx(a) or X	AB or X
Chapter 7	xx(a) or XØØ	ABØ or XØØ
***[Special Characteristics]* DEI 3 is only applicable to Chapters 4 and 5**		

- **Default**
  Defines any specific defaults for the data element
- **Format**
  Specifies the format of the data element
- **Use**
  Defines the general use of the data element (if additional to the Description)
- **Specific Applications—by applicable Chapter**
  When required, specifies use, conditions and interpretations for each Chapter
- **Values**
  Lists the permitted values for the element or references where the values may be found
- **Notes**
  Explanatory notes on the use and application of the data element

2.6 Data Element Glossary

ACTION CODE DEI – – –

Indication of the type of request/advice record or reply record in the Airport Clearance/Advice Procedure		
Application	**Format**	**Example**
Chapter 6	a	C

Use

The application of these Action Codes is explained in Chapter 6.

Values

Code	Message	User	Description
A	SCR SMA	Airline Airline	Acceptance of an offer–no further improvement desired Acceptance of an offer–no further improvement desired
B	SCR	Airline	New entrant
C	SAQ SCR SMA WCR	Airline Airline Airline Airline	Schedule to be changed Schedule to be changed for an operational reason or towards the initial requested time of the airline Schedule to be changed Waitlist to be changed for an operational reason
D	SCR SMA	Airline Airline	Delete schedule Delete schedule
E	SCR SMA	Airline Airline	Eliminate schedule Eliminate schedule
F	SCR	Airline	Historic schedule
H	SAQ SCR SHL SAL SMA SIR SIR	Coordinator Coordinator Coordinator Coordinator Facilitator Coordinator Facilitator	Holding Holding Eligible for historic precedence Return to historic Holding (Voluntary Reschedule Offer) Holding Holding
I	SCR SAQ	Airline Coordinator	Revised schedule (Continuation from previous adjacent Season) Availability information
K	SCR SAL SAL SMA	Coordinator Coordinator Facilitator Facilitator	Confirmation Confirmation Confirmation Confirmation
L	SCR	Airline	Revised schedule (No offer acceptable)
M	SCR WCR	Airline Airline	Scheduled to be changed for reason other than Action Code C Waitlist to be changed for reason other than Action Code C
N	SCR SMA SAQ WCR	Airline Airline Airline Airline	New schedule New schedule New schedule New Waitlist request
O	SCR SAL SAL SMA SIR	Coordinator Coordinator Facilitator Facilitator Coordinator	Offer Offer Offer–voluntary adjustment request Offer–voluntary adjustment request Offer
P	SCR SCR SMA SIR WCR WIR	Airline Coordinator Airline Coordinator Coordinator Coordinator	Acceptance of an offer–maintain Waitlist Pending (action or advice) Acceptance of an offer–improvement desired Pending Pending (for improvement) Pending (for improvement)
Q	SIR WIR	Airline Airline	Request for schedule information Request for schedule information
R	SCR SMA SAQ WCR	Airline Airline Airline Airline	Revised schedule (Offer acceptable) Revised schedule Revised schedule Revised Waitlist Request

Code	Message	User	Description
T	SCR SAL SHL SIR SMA	Coordinator Coordinator Coordinator Coordinator Facilitator	Allocated subject to conditions Allocated subject to conditions Allocated subject to conditions Allocated subject to conditions Allocated subject to conditions
U	SAQ SCR SHL SIR SAL SAL SMA	Coordinator Coordinator Coordinator Coordinator Coordinator Facilitator Facilitator	Refusal Refusal Not eligible for historic precedence No slot allocated No slot allocated Not confirmed Not confirmed
V	SCR	Airline	New entrant with year round status
W	SCR SMA WCR	Coordinator Facilitator Coordinator	Unable to reconcile flight information Unable to reconcile flight information Unable to reconcile flight information
X	SCR WCR SMA	Coordinator Facilitator Coordinator	Cancellation Cancellation Removed/Deleted Waitlist Request
Y	SCR	Airline	New schedule (Continuation from previous adjacent Season)
Z	SCR SMA WCR	Airline Airline Airline	Decline offer Decline offer Remove Waitlist Requests for flights with or without slots

ACTION IDENTIFIER DEI – – –

An identifier to state the extent of difference from previous information in order to enable the recipient to determine the required action		
Application	**Format**	**Example**
Chapters 4,5	aaa	NEW

Chapters 4 and 5 Format

Three alphabetic characters

Use

Used by the originator of telegraph messages according to the rules stated in the appropriate SSIM Chapter.

Additional Action Identifiers may be used by certain carriers in connection with the handling of flights during the operations phase.

These may include identifiers to handle, for example, aircraft/crew changes or re-instating flights.

Values

Identifier	Description
SKD	Schedule update (Chapter 4 only)
NEW	Insertion of new flight information
CNL	Cancellation
RIN	Reinstatement (Chapter 5 only)
RPL	Replacement of existing flight information
REV	Revision to Period of Operation and/or Day(s) of Operation (Chapter 4 only)
FLT	Change of Flight Designator or Flight Identifier
EQT	Change of equipment information
TIM	Change of time information
CON	Change of Aircraft Configuration/Version
RRT	Change of routing (Chapter 5 only)
ADM	Change of existing flight information expressed by use of Data Element Identifier only
RSD	Repeat/Request for schedule data (Chapter 4 only)
ACK	Acknowledgement
NAC	Not Actioned

AIRCRAFT CONFIGURATION/VERSION (ACV) DEI – – –

Identification of the physical cabin layout of an aircraft			
Application	**Format**	**Condition**	**Example**
Chapters 3,4,5,7	a(x)(x)(x)……	*Passenger codes*	FY
		Passenger codes and values	F10J10Y200
		Cargo codes	LLPP
		Cargo codes and quantities	PP10 FYPP
		Combinations	F32Y200K93PP20 F014Y119VVT3M33 PPVVT3M33

→ *For further guidance, refer to Appendix H: Aircraft Seating Description*

Use

The ACV data element can only be used for legs.

In addition to identifying the physical cabin layout, the ACV field may also optionally specify the number of seats fitted per compartment and/or the planned available capacity for cargo and/or mail.

As this Data Element is intended as a physical description of the cabin layout, this field may not necessarily specify the codes to be used for publication, reservation and other public information purposes, or the classes provided. To detail the categories of compartments or class of service provided use should be made of the data element Passenger Reservations Booking Designator.

It is optional to provide the number of seats fitted, but when a value has been supplied then the total seats must equal the seating capacity of the aircraft. When seat values have been included, the data must not exceed four characters, and may optionally include leading zeroes.

The ACV field can contain a string of characters in which the codes are in submitted in a mandatory sequence according to the values in the aircraft compartment/class of Service codes table:

1. A sequence of passenger codes in the order presented in the table, each optionally followed by the number of seats in the compartment/class of service
2. A sequence of cargo codes in the order presented in the table, each optionally followed by the capacity available
3. The characters 'VV' followed by the aircraft version reference as assigned by the Administrating Carrier. (The definition of which is notified to the intended recipient for use as appropriate)
4. Combinations of the above

Chapter 4, 5 Application

Where it is not possible to express the Aircraft Configuration/Version within the maximum line length, then **"XX"** will be stated in the first two positions. This applies when the *combined* full formats of the data elements used in the Equipment Data line result in an overflow on this line.

Refer to Chapter 4/5 Technical specifications for the data elements applicable in the Equipment Data Line; and the display of passenger and cargo classes in the SSM/ASM messages.

Chapter 7 Application

Where it is not possible to express the Aircraft Configuration/Version within the available field (bytes 173–192; 20 characters in Chapter 7) then **"XX"** will be stated in 173/174 and 175 to 192 will be left blank. This indicates that reference should be made to Data Element Identifier 108 (Aircraft Configuration/Version Exceeding Maximum Length) for full Aircraft Configuration/Version specification.

Moveable Bulkheads if required should be submitted using Data Element Identifiers 800–899 (Data Element Identifiers—Free Format for Bilateral Use) or 900–999, (Data Element Identifiers—Free Format for Internal use) or by the aircraft version reference code following the characters **"VV"** as described above.

Values for Aircraft Compartment/Class of Service Codes

Aircraft Compartment/Class of Service Codes have a different purpose from Service Type Codes. The codes in this table are intended for use to describe the physical cabin layout, **or** the Reservations Classes used (see Passenger Reservations Booking Designator).

Service Type Codes (Appendix C) are intended to describe *the classification* of a route or flight and *the type of service provided*.

"Shuttle Service" and "Passenger Service" relate to Service Type Codes contained in SSIM Appendix C.

Passenger Codes	**Compartment**
P	First Class Premium
F	First Class
A	First Class Discounted
J	Business Class Premium
C	Business Class
D, I, Z	Business Class Discounted
W	Economy/Coach Premium
S, Y	Economy/Coach
B, H, K, L, M, N, Q, T, V, X	Economy/Coach Discounted
G	Conditional Reservation
U	*Shuttle Service*—No reservation needed—Seat guaranteed
E	*Shuttle Service*—No reservation allowed—Seat to be confirmed at check-in *Passenger Service*—Reservations permitted
O, R	Use varies by Airline
Cargo codes	**Description**
LL	Unit Load Devices (containers)
PP	Pallets

AIRCRAFT CONFIGURATION/VERSION EXCEEDING MAXIMUM LENGTH DEI 108

Identification of the complete Aircraft Configuration/Version specification when it exceeds the maximum length available		
Application	**Format**	**Example**
Chapters 4,5,7	a(x) ...	`P12F24C100Y264LL10PP12`

Use

In the absence of Data Element Identifier 108, it is assumed that the complete Aircraft Configuration/Version is contained within its dedicated data element.

Chapters 4 and 5 Applications

The maximum line length constraint of 58 characters must be protected.

A **"NIL"** statement is not required when previous information transmitted about the same flight leg is modified to the extent that Data Element Identifier 108 is not required.

AIRCRAFT OWNER DEI 3

Information provided to whomever it may concern that the flight(s) will be operated with an aircraft not belonging to the fleet of the Administrating Carrier		
Application	**Format**	**Example**
Chapters 4,5	xx(a) or X	BA or BAF or X
Chapter 7	xx(a) or XØØ	BA or XØØ
DEI 3 is only applicable to Chapters 4 and 5		

Default

When the data element is not stated, the default applies, i.e. the aircraft belongs to the carrier as stated in the airline designator of the flight designator. In these circumstances the aircraft owner field is left blank, no data is supplied.

However—For Chapter 7 applications, when Code Share agreement are in place, and S/L indicators are supplied in byte 149, and the aircraft owner is the same as the fleet of the carrier in the airline designator; then it is a requirement that the aircraft owner is supplied in byte 129–131 and not left blank.

Refer to Operating Airline Disclosure—Code Share DEI 2

Example

```
3 LH 58462501J20OCT1220OCT12     6  HAM14501450+02002 ZRH16151615+0200  733JCDZYBMHQVVGKLTEUS      XX                        LH LH LH         1 L
4 LH 58462501J              AB050HAMZRHLX 1057
4 LH 58462501J              AB109HAMZRHM M M M M M M M M M M M M M M M M M
4 LH 58462501J              AB503HAMZRH  9
4 LH 58462501J              AB505HAMZRHET
```

Use

When there is a legal requirement to disclose the Aircraft Owner, and the default stated above does not apply, the use of this data element is mandatory.

Chapters 4, 5 and 7 Applications

The Aircraft Owner consists of:

(a) The Data Element Identifier, always the digit **"3"** (not applicable in Chapter 7);

(b) The Airline Designator for the carrier to whose fleet the aircraft belongs.

When the aircraft owner/cabin crew employer/cockpit crew employer has no Airline Designator, a letter **"X"** will be specified to indicate that it's incorporated/registered name in plain text will be found under Data Element Identifier 113/115/114 (Aircraft Owner Specification/Cabin Crew Employer Specification/Cockpit Crew Employer Specification).

AIRCRAFT OWNER SPECIFICATION DEI 113

Identification of the aircraft owner's incorporated/registered name when it does not have its own Airline Designator		
Application	**Format**	**Example**
Chapters 4,5,7	x(x) ...	ABC AIRWAYS INC

Use

This data element is used when the letter **'X'** is specified under Aircraft Owner.

When there is a legal requirement to disclose the Aircraft Owner, and the identification of the Aircraft Owner's incorporated/registered name is required as stated above, the use of this data element is mandatory.

When specifying a full company name, users should be aware that some computer systems have limitations on the number of characters that can be stored and/or displayed.

As such, specifications of more than 35 characters may be truncated.

AIRCRAFT REGISTRATION DEI – – –

The complete alphanumeric identification assigned by the appropriate licensing authority to an individual aircraft		
Application	**Format**	**Example**
Chapter 5	xx(x)(x)(x)(x)(x)(x)(x)(x)	0HLMG

Format

Two (2) to ten (10) alphanumeric characters.

Hyphens contained within the registration shall not be included.

Chapter 5 Application

Normally used in the operations control phase only.

AIRCRAFT ROTATION LAYOVER DEI – – –

A single numeric value to denote that the layover of the aircraft at the leg arrival station is 24 or more hours		
Application	**Format**	**Example**
Chapter 4	/n	/1
Chapter 7	n	2

Use

Can only be used as part of Onward Flight.

Chapter 4 Application

This field is preceded by a slash.

Values

Code	Description
1	24 to 47:59 hours layover
2	48 to 71:59 hours layover, etc.

AIRCRAFT TYPE DEI – – –

The IATA standard 3-character code that normally covers the manufacturer and main model of a commercial aircraft		
Application	**Format**	**Example**
Chapters 3,4,5,6,7	xxx	D92

Use

For timetable publication purposes, the Aircraft Type can be overridden with the objective of consolidating otherwise equal itineraries (see Aircraft Type Publication Override).

Values

Refer to SSIM Appendix A.

Note: *When there is a plane change en-route without Aircraft Type change, this information must be provided using Data Element Identifier 210 (Plane Change at Board Point without Aircraft Type Change).*

AIRCRAFT TYPE PUBLICATION OVERRIDE DEI 121

An element to allow carriers to override the Aircraft Type stated in Equipment Information elsewhere		
Application	**Format**	**Example**
Chapters 4,5,7	xxx	747

Use

This data element allows carriers to publish a consolidated schedule as a combination of different itinerary variations where the only difference is the Aircraft Type.

It is also possible to override codes listed in SSIM Appendix A with non-aircraft codes.

Although this is not generally recommended, this could well be used for Surface Vehicles, e.g. trains, to reflect different types of equipment not listed in SSIM Appendix A.

Chapters 4, 5 and 7 Applications

The alphanumeric string of characters stated in this data element will override the Aircraft Type stated in Equipment Information (Chapters 4 and 5) or Record Type 3 (Chapter 7) for timetable publication purposes.

AIRLINE DESIGNATOR DEI – – –

The 2-character code assigned to a carrier by IATA and published in the IATA Airline Coding Directory or the 3-alphabetic codes assigned to a carrier by ICAO		
Application	**Format**	**Example**
Chapters 3,4,5,6,7	xx(a)	ABC

Use

Carriers not assigned IATA 2-character codes may use the ICAO 3-letter codes.

However, for publication and reservations purposes, 3-letter codes must currently not be used as some computer systems would be unable to read them.

Reference should also be made to IATA Resolution 762 and A4A Resolution 5.38.

The data element format provides for 3-character designators.

When the industry formally adopts the three character designators, the format will be ‘aaa’.

Meanwhile, the present official format is ‘xx’ but effectively is ‘xa’ or ‘ax’ in practice, in order to avoid confusion with the Flight Number.

Values

Refer to the IATA Airline Coding Directory.

ARRIVAL DATE DEI – – –

The date of arrival of an aircraft at the Clearance/Advice Airport for flights operating on single dates		
Application	**Format**	**Example**
Chapter 6	nnaaa	19NOV

Use

The element is used for terminating, transit or turnaround operations.

ASM WITHDRAWAL INDICATOR DEI – – –

An indicator to advise the recipient that all currently held basic **and ad hoc** schedule information pertaining to the stated Flight Designator and relevant Period and Day(s) of Operation is overridden by the schedule information contained in the telegraph message		
Application	**Format**	**Example**
Chapter 4	XASM	XASM

Chapter 4 Application

May be used on a Standard Schedules Message (SSM), with Action Identifiers **"SKD", "NEW", "RPL"** or **"CNL"**.

BLOCKED SEATS AND/OR UNIT LOAD DEVICES DEI 104

The number of seats or ULDs by compartment, that are blocked/unavailable out of the total capacity shown in the Aircraft Configuration/Version, or capacity leased to other carriers		
Application	**Format**	**Example**
Chapters 4,5	a(a)n(x)(x)(x)(x)(x)(x)(x)...	F1Y3
Chapter 7	a(x)(x)(x)(x)(x)(x)(x)...	PP2

→ *For further guidance refer to Appendix H: Aircraft Seating Description*

BOARD POINT INDICATOR DEI – – –

A single alpha character to indicate the departure station of a segment (Board Point) to which a data element associated with a Data Element Identifier applies		
Application	**Format**	**Example**
Chapter 7	a	A

Values

A single byte field where the departure station (board point) on the first leg of a flight is indicated by **"A"**, the departure station on the second leg is indicated by **"B"** and so on.

```
3 SQ 0010101J20AUG0828AUG081234  SFO01200120-0700    HKG06300630+08001
4 SQ 0010101J    AB010SFOHKGAI 8001 /US 5402
4 SQ 0010101J    AB106SFOHKGFPACZJDYSEBMWHQNVTLKG
4 SQ 0010101J    AB109SFOHKGM M M M M M M M M M M M M M M M M M M M M M
4 SQ 0010101J    AB503SFOHKG 9
4 SQ 0010101J    AB505SFOHKGET
3 SQ 0010102J21AUG0829AUG08 2345  HKG08000800+08001  SIN11401140+0800
4 SQ 0010102J    BC010HKGSINAI 8001 /US 5402
4 SQ 0010102J    BC106HKGSINFPACZJDYSBEMWQNTVHLKG
4 SQ 0010102J    BC109HKGSINM M M M M M M M M M M M M M M M M M M M M M
4 SQ 0010102J    BC503HKGSIN 9
4 SQ 0010102J    BC505HKGSINET
```

CABIN CREW EMPLOYER DEI 5

Information provided to whomever it may concern that the flight(s) will be operated with cabin crew not employed by the Aircraft Owner		
Application	**Format**	**Example**
Chapters 4,5	xx(a) or X	AB or X
Chapter 7	xx(a) or XØØ	ABØ or XØØ
DEI 5 is only applicable to Chapters 4 and 5		

Default

When the data element is not stated, the default applies (i.e., the cabin crew is employed by the Aircraft Owner).

Use

When there is a legal requirement to disclose the Cabin Crew Employer, and the default stated above does not apply, the use of this data element is mandatory.

Chapters 4, 5 and 7 Applications

For Chapters 4, 5 and 7 applications, the Cabin Crew Employer consists of:

(a) The Data Element Identifier, always the digit **"5"** (not applicable in Chap 7);

(b) The Airline Designator for the carrier by which the cabin crew is employed.

When the aircraft owner/cabin crew employer/cockpit crew employer has no Airline Designator, the letter **"X"** will be specified to indicate that it's incorporated/registered name in plain text will be found under Data Element Identifier 113/115/114 (Aircraft Owner Specification/Cabin Crew Employer Specification/Cockpit Crew Employer Specification).

CABIN CREW EMPLOYER SPECIFICATION DEI 115

Identification of the cabin crew employer's incorporated/registered name when it does not have its own Airline Designator		
Application	**Format**	**Example**
Chapters 4,5,7	x(x)...	ABC AIRWAYS INC

Use

It is used when the letter **'X'** is specified under Cabin Crew Employer.

When there is a legal requirement to disclose the Cabin Crew Employer, and the identification of the Cabin Crew Employer's incorporated/registered name is required as stated above, the use of this data element is mandatory.

CHANGE REASON DEI – – –

A set of codes assigned by the airlines to be able to inform recipients of the main reason for an ad hoc schedule change and to simultaneously provide statistical information		
Application	**Format**	**Example**
Chapter 5	aaaa	POSI

Values

Code	Interpretation
AIRS	Airspace restrictions
ARPT	Airfield restrictions
COMM	Commercial reasons, demand or lack of demand
CREW	Crew shortage
DAMA	Aircraft damage
EQUI	Equipment shortage
FUEL	Fuel shortage
HDLG	Ground handling
HOLI	Holiday
INDU	Industrial dispute
OPER	Operational reasons
PERF	Aircraft performance
POLI	Political situation
POSI	Aircraft positioning
REPO	Aircraft re-positioning
ROTA	Aircraft rotation
RTNS	Return to normal schedule or reinstatement of flight status prior to issuance of ASM(s) (withdrawal of ASM change)
RUNW	Runway restrictions
TECH	Technical reasons, maintenance, etc.
WEAT	Weather conditions

CLEARANCE/ADVICE AIRPORT DEI – – –

The airport at which clearance is requested or for which schedule data is advised		
Application	**Format**	**Example**
Chapter 6	aaa	LHR

Values

Refer to the IATA 3-lettter Location Identifiers.

CLEARED TIME DEI – – –

Information provided by Coordinators to indicate the slot time currently held		
Application	**Format**	**Example**
Chapter 6	aa.nnnn	AA.0910

Format

An optional element consisting of four digits. In the case of Chapter 6, these digits are preceded by a code defining flight arrival or flight departure.

Chapter 6 Application

Used within the WIR message. Cleared Time is always preceded by a blank space, then **AA** and a full stop/period if it refers to the flight arrival, or **AD** and a full stop/period if it refers to the flight departure. It is positioned after the Passenger Terminal Identifier (if applicable), or Frequency Rate, or the Service Type if no Frequency Rate applies.

Chapter 6 describes the procedure to be followed when the use of Cleared Time results in the maximum message line length being exceeded.

COCKPIT CREW EMPLOYER DEI 4

Information provided to whomever it may concern that the flight(s) will be operated with a cockpit crew not employed by the Aircraft Owner		
Application	**Format**	**Example**
Chapters 4,5	xx(a) or X	AB or X
Chapter 7	xx(a) or XØØ	ABØ or XØØ
DEI 4 is only applicable to Chapters 4 and 5		

Default

When the data element is not stated, the default applies (i.e. the cockpit crew is employed by the Aircraft Owner).

Use

When there is a legal requirement to disclose the Cockpit Crew Employer, and the default stated above does not apply, the use of this data element is mandatory.

Chapters 4, 5 and 7 Applications

The Cockpit Crew Employer consists of:

(a) The Data Element Identifier, always the digit **"4"** (not applicable in Chapter 7);

(b) The Airline Designator of the carrier that employs the cockpit crew.

When the aircraft/owner/cabin crew employer/cockpit crew employer has no Airline Designator, the letter **"X"** will be specified to indicate that it's incorporated/registered name in plain text will be found under Data Element Identifier 113/115/114 (Aircraft Owner Specification/Cabin Crew Employer Specification/Cockpit Crew Employer Specification).

COCKPIT CREW EMPLOYER SPECIFICATION DEI 114

Identification of the cockpit crew employer's incorporated/registered name when it does not have its own Airline Designator		
Application	**Format**	**Example**
Chapters 4,5,7	x(x)...	ABC AIRWAYS INC

Use

Used when the letter **"X"** is specified under Cockpit Crew Employer.

When there is a legal requirement to disclose the Cockpit Crew Employer, and identification of the Cockpit Crew Employer's incorporated/registered name is required as stated above, the use of this data element is mandatory.

When specifying a full company name, users should be aware that some computer systems have limitations on the number of characters that can be stored and/or displayed.

As such, specifications of more than 35 characters may be truncated.

CONTINUATION/END CODE DEI – – –

Indication that this is **either** the last message/data set in a data transfer **or** that further messages/data sets are to be expected		
Application	**Format**	**Example**
Chapters 4,5,7	a	E

Chapters 4, 5 and 7 Applications

The code is a single character field indicating whether or not additional messages or seasons/carriers/physical data sets are to follow:

E	for final message/data set in the series
C	to be continued within the same series

Chapters 4 and 5 Applications

The element is part of the Message Sequence Reference.

COORDINATOR REASON DEI – – –

Information provided by Coordinators to advise airlines of their reason(s) for being unable to provide slot(s) requested		
Application	**Format**	**Example**
Chapter 6	aa.x(x)(x)	CA.SEC

Format

An optional element consisting of up to three alphanumeric characters. In the case of Chapter 6, these characters are preceded by a code defining flight arrival or flight departure.

Chapter 6 Application

Used within the SCR, SAL and SHL messages. Coordinator Reason is always preceded by a blank space, then **CA** and a full stop/period if it refers to the flight arrival, or **CD** and a full stop/period if it refers to the flight departure. It is positioned after the Passenger Terminal Identifiers and/or the Requested Timings if used, or Frequency Rate, or the Service Type if no Frequency Rate applies.

Chapter 6 describes the procedure to be followed when the use of Coordinator Reason results in the maximum message line length being exceeded.

CREATION DATE DEI – – –

The computer-generated date of data set creation		
Application	**Format**	**Example**
Chapter 7	nnaaann	10JUN01

Use

This is a mandatory field and is used in conjunction with Creation Time to identify the exact time of data set creation.

These elements can also be used as the basis to determine precedence compared to other schedule data procedures.

Chapter 7 Application

The Creation Date is specified in Record Type 2 and is expressed as the day of the month (first two numerics), followed by the month (first three alphabetic characters in English spelling), followed by the year (last two numerics).

CREATION TIME DEI – – –

The computer-generated time of data set creation		
Application	**Format**	**Example**
Chapter 7	nnnn	1128

Use

This is a mandatory field and is expressed by four digits indicating the 24 hours clock timing in the range 0000 through 2400.

Chapter 7 Application

It is placed in Record Type 2 and is used in conjunction with Creation Date to identify the exact time of data set creation.

These elements can also be used as the basis to determine precedence compared to other schedule data procedures.

CREATOR REFERENCE DEI – – –

Unique identification assigned by the originator of the data and referenced by the recipient whenever appropriate		
Application	**Format**	**Example**
Chapters 4,5	/x(x)(x)(x)(x)(x)(x)(x)(x)(x)... (max. 35 characters)	/ABC011 S80/05APR /EMAIL@AIRLINE.COM/ABC011 S03/ 05APR
Chapter 6	/x(x)(x)(x)(x)(x)(x)(x)(x)(x)... (max. 69 characters)	//LT//BLOCK/ABCD123/HDQACXH@ coordaus.com.au
Chapter 7	x(x)(x)(x)(x)(x)(x)(x)(x)(x)(x)... (35 characters)	ABC1234/05APRØØØØØØØ...

Use

It consists of up to 35 characters in free format with the exception of chapter 6 where up to 69 characters can be used.

In telegraph messages, it is preceded by a slash and the last 6 characters are recommended to be a slash followed by the date.

When an email address is to be included in the Creator Reference, it should come first (after the slash, in the case of Chapters 4 and 5 applications). This may then be followed by a space and new/followed by the normal originator's internal reference. In the case of chapter 6 messages, the email is the last element of the creator's reference (see 6.4.2).

DATA ELEMENT IDENTIFIER DEI – – –

Identification of a specific data element in SSIM		
Application	**Format**	**Example**
Chapters 4,5	n(n)(n)	809
Chapter 7	(n)nn	Ø50

Chapters 4 and 5 Applications

Refer to the Technical Specifications in the appropriate Chapters.

Chapter 7 Application

A 3-byte numeric field in the Segment Record

For a general description of the relationship between Data Element Identifier and its corresponding data element see Section **2.3: Data Elements and Data Element Identifiers**.

Note: *Once data has been transmitted for **segments** using Data Element Identifiers (except Data Element Identifiers 106–109) it can only be modified or deleted in the following ways:*

*When using Chapters 4 and 5 (SSM and ASM), either by using Action Identifiers **"SKD", "NEW", "CNL"** or **"RPL"** (replacing or deleting **all** data);*

or

*by specific replacement using the same Data Element Identifier(s) with Action Identifier **"ADM"** to specify new or revised information*

or

*by specific deletion, by using the same Data Element Identifier(s) but stating **"NIL"** after the Data Element Identifier*—e.g. AAABBB 111/NIL.

When using Chapter 7 complete replacement of all data is being carried out, including any segment data previously specified using Data Element Identifiers.

*In cases where a single Data Element Identifier contains a list of items/codes (e.g. In-Flight Service Information—Data Element Identifier 503), it is not possible to add, delete or revise the individual items/codes in the list on their own. In such cases, a **complete** revised list of items/codes must be transmitted.*

APPLICATION OF DATA ELEMENT IDENTIFIERS

→ *For further guidance, refer to Appendix H: Legs/Segments*

The following table lists all Data Element Identifiers in numerical order stating their position in SSM (Chapter 4) and ASM (Chapter 5) use as well as the applicable Record Type for Chapter 7 use. Where alternatives exist, the data may only be placed in one position for each sub-message of Itinerary Variation.

The applicable positions as listed in the table below are as follows:

F	Flight Information
P	Period/Frequency Information
E	Equipment Information
L	Routing or Leg Information
S	Segment Information
3	Record Type 3—Flight Leg (Data Element Identifier not used)
4	Record Type 4—Segment Data
★	State the leg in this position (see **Note 1** below)

Note 1: *The Data Element Identifiers marked S★ or 4★ can only be used for legs, and not for segments which are not also legs. For example, Data Element Identifier 503 is shown as S★, and is clearly defined in this Chapter as being a leg based data element. Therefore on a flight routing AAA-BBB-CCC, it would be wrong to show on the Segment Information line of an SSM:*

`AAACCC 503/8,`

but correct to show:

`AAABBB 503/8 and/or BBBCCC 503/8`

When `QQQ` *is used as part of the segment specification, this rule still applies.*

This means that, on a flight routing AAA-BBB-CCC, QQQQQQ 503/9, for example, can only be used when it applies to BOTH the legs AAA-BBB and BBB-CCC. QQQQQQ has no meaning for AAA-CCC, because 503 is a leg based data element.

QQQ means all Board or Off Points (or both) depending upon which position it is in.

For segment based Data Element Identifiers, such as 8, 11, 101, 102, 111 etc., on a flight routing AAA-BBB-CCC, QQQCCC means AAA-CCC and BBB-CCC, but not AAA-BBB because BBB is not stated as an Off Point.

Similarly, AAAQQQ means AAA-BBB and AAA-CCC, but not BBB-CCC because BBB is not stated as a Board Point.

QQQQQQ means all segments—AAA-BBB, AAA-CCC and BBB-CCC.

For station oriented Data Element Identifiers, such as 97, 98, 99, 198 and 199, the format or meaning of the Data Element Identifier defines whether it is the Board Point or Off Point of the stated segment that is being referenced.

Flight Routing: AAA-BBB-CCC	Leg based data element applied to:	Segment based data element applied to:
If QQQ-CCC	BBB-CCC	AAA-CCC and BBB-CCC
If AAA-QQQ	AAA-BBB	AAA-BBB and AAA-CCC
If QQQ-QQQ	AAA-BBB and BBB-CCC	AAA-BBB and BBB-CCC and AAA-CCC

Note 2: *The application of a data element should be stated at the highest applicable level possible (levels are F, P, E, L, S) and not repeated at a lower level in the same message.*

For example, in Chapter 4, if Service Type "J", Aircraft Type "744", and Aircraft Configuration/ Version "PCY" (i.e. all Equipment information) applies to all legs of a multi-leg flight, this information should be stated only once (level E) prior to the information relating to the first leg (level L); it should not be re-stated before each set of leg information.

Data Element Identifier	Name of Data Element	Chap. 4	Chap. 5	Chap. 7
1	Joint Operation Airline Designators	F/P/L	F/L	3
2	Operating Airline Disclosure—Code Share	F/P/E/L	F/E/L	3
3	Aircraft Owner	F/P/E/L	F/E/L	3
4	Cockpit Crew Employer	F/P/E/L	F/E/L	3
5	Cabin Crew Employer	F/P/E/L	F/E/L	3
6	Onward Flight	P/E/L	F/E/L	3
7	Meal Service Note	L	L	3
8	Traffic Restriction Note	S	S	3(4)
9	Operating Airline Disclosure—Shared Airline or Wet Lease Designation	F/P/E/L	F/E/L	3
10	Duplicate Leg Cross Reference—Duplicate Leg Identification	S★	S★	4★
11	Partnership Specification	S	S	4
50	Duplicate Leg Cross Reference—Operational Leg Identification	S★	S★	4★
97	UTC/Local Time Variation Specification	S★	S★	3[1]
98	Passenger Terminal Identifier—Arrival	S★	S★	3[2]
99	Passenger Terminal Identifier—Departure	S★	S★	3[2]
101	Passenger Reservations Booking Designator Segment Override	S	S	4
102	Passenger Reservations Booking Modifier Segment Override	S	S	4
104	Blocked Seats and/or Unit Load Devices	S★	S★	4★
105	Restricted Payload	S★	S★	4★
106	Passenger Reservations Booking Designator Exceeding Maximum Length	S★	S★	4★
107	Passenger Reservations Booking Modifier Exceeding Maximum Length	S★	S★	4★
108	Aircraft Configuration/Version Exceeding Maximum Length	S★	S★	4★
109	Meal Service Note Exceeding Maximum Length	S★	S★	4★
111	Meal Service Segment Override	S	S	4
113	Aircraft Owner Specification	S★	S★	4★
114	Cockpit Crew Employer Specification	S★	S★	4★
115	Cabin Crew Employer Specification	S★	S★	4★
121	Aircraft Type Publication Override	S	S	4
122	Flight Number Override	S	S	4
125	Joint Operation Airline Designators Segment Override	S	S	4
127	Operating Airline Disclosure	S★	S★	4★
170	Traffic Restriction Code Applicable to Passengers Only	S[3]	S[3]	4
171	Traffic Restriction Code Applicable to Cargo/Mail Only	S[3]	S[3]	4

Data Element Identifier	Name of Data Element	Chap. 4	Chap. 5	Chap. 7
172	Traffic Restriction Code Applicable to Cargo Only	S[3]	S[3]	4
173	Traffic Restriction Code Applicable to Mail Only	S[3]	S[3]	4
198	Passenger Terminal Segment Override—Arrival	S	S	4
199	Passenger Terminal Segment Override—Departure	S	S	4
201	Subject to Government Approval	S	S	4
210	Plane Change without Aircraft Type Change	S★	S★	4★
220	Minimum Connecting Time International/Domestic Status Override	S	S	4
299	Passenger Check-In	S★	S★	4★
301	Flaglanding at Off Point Only	S★	S★	4★
302	Flaglanding at Off Point and Board Point	S★	S★	4★
303	Flaglanding at Board Point Only	S★	S★	4★
501	On-Time Performance Indicator	S★	S★	4★
502	On-Time Performance Indicator for Delays & Cancellations	S★	S★	4★
503	In-Flight Service Information	S★	S★	4★
504	Secure Flight Indicator	S★	S★	3★
505	Electronic Ticketing Information	S★	S★	4★
507	Request All Reservations	S	S	4
710	Traffic Restriction Code Qualifier at Board Point	S[3]	S[3]	4
711	Traffic Restriction Code Qualifier at Off Point	S[3]	S[3]	4
712	Traffic Restriction Code Qualifier at Board and Off Points	S[3]	S[3]	4
800–899	Data Element Identifiers—Free Format Bilateral Use	S(★)	S(★)	4
900–999	Data Element Identifiers—Free Format Internal Use	S(★)	S(★)	4

1 See UTC/Local Time Variation (for Departure and Arrival Station).

2 See Passenger Terminal.

3 Sub-element to Traffic Restriction Note.

DATA ELEMENT IDENTIFIERS–FREE FORMAT BILATERAL USE DEI 800–899

A free format text field assigned by the individual carrier for bilateral purposes		
Application	**Format**	**Example**
Chapters 4,5	xxx... (max. 58 char.)	IN FLIGHT MOVIE
Chapter 7	xxx... (max. 155 char.)	

DATA ELEMENT IDENTIFIERS–FREE FORMAT INTERNAL USE DEI 900–999

A free format text field assigned by the individual carrier for internal purposes.		
Application	**Format**	**Example**
Chapters 4,5	xxx... (max. 58 char.)	RULE 69 APPLIES
Chapter 7	xxx... (max. 155 char.)	

DATA SET SERIAL NUMBER DEI – – –

Indication of the position of the physical data set within the logical data set in which it occurs		
Application	**Format**	**Example**
Chapter 7	nnn	002

Use

A 3 byte mandatory field in Record Type 1.

DATE OF MESSAGE DEI – – –

The date of request/advice/reply		
Application	**Format**	**Example**
Chapters 4,5,6	nnaaa	03NOV

Use

Expressed as the first two numerics for the day of the month followed by the first three alphabetic characters (in English spelling) for the month.

Chapters 4 and 5 Applications

This element is part of the Message Sequence Reference.

DATE VARIATION DEI – – –

The relationship between Day(s)/Period of Operation of the flight origin station and the Scheduled Time of Aircraft Departure/Arrival in the same time mode		
Application	**Format**	**Example**
Chapter 4	(M)n	2
Chapter 7	Nn	01

Chapter 4 Application

The code values are as follows:

0	Arrival/departure on the same day (optional)
1	Arrival/departure on the next day
2	Arrival/departure two days later
3	Arrival/Departure three days later
4	Arrival/Departure four days later
5	Arrival/Departure five days later
6	Arrival/Departure six days later
7	Arrival/Departure seven days later
M1	Arrival/departure on the previous day

Chapter 7 Application

The code values are as follows:

0 Arrival/departure on the same day
1 Arrival/departure on the next day
2 Arrival/departure two days later
3 Arrival/Departure three days later
4 Arrival/Departure four days later
5 Arrival/Departure five days later
6 Arrival/Departure six days later
7 Arrival/Departure seven days later
A Arrival/departure is previous day

The first indicator stated in the format applies to the Departure Variation and the second indicator applies to the Arrival Variation.

Chapter 7 Example:

```
3 XX 12340101J15AUG0615DEC061234567 ATL20002000-0500SLGW09000900....01
3 XX 12340102J16AUG0616DEC061234567 LGW10301030+0000SFRA13301330..11
3 XX 12340103J16AUG0616DEC061234567 FRA16001600-0100SIN04000400....12
3 YY 010101J15AUG0615DEC061234567 AKL10301030+1000 HNL21152115....0A
3 YY 010102J14AUG0614DEC061234567 HNL23002300-1000 LAX07000700....A0
```

DAY(S) OF OPERATION DEI – – –

The day(s) of the week when a flight is operated		
Application	**Format**	**Example**
Chapter 3	nnnnnnn[1]	1.3.5.7
Chapter 4	n(n)(n)(n)(n)(n)(n)	1357
Chapter 6	nnnnnnn	1030507
Chapter 7	(n)(n)(n)(n)(n)(n)(n)	1Ø3Ø5Ø7

[1] 'n' may be substituted by full stop/period.

Use

When used in a context where flights are cancelled/deleted, Day(s) of Operation specifies the day(s) of the week to be cancelled.

The Day(s) of Operation shall be stated as numbers 1 through 7, where Monday is Day 1.

Ascending order is mandatory.

Days of Operation should be compatible with Period of Operation.

If schedule information is received with incompatible Period of Operation/Days of Operation, then the incompatible days of operation should be eliminated.

For example, AB1234 12SEP01-13SEP01, days 1234567, change the days to 17.

The Day(s) of Operation must conform to the applicable Time Mode.

Applicability of Day(s) of Operation

Chapters 3,4	Day(s) refer to departure from origin station
Chapter 6	Day(s) refer to operation at Clearance/Advice Airport
Chapter 7	Day(s) refer to departure from leg departure station

Non-operative days are to be filled a follows:

Chapter 3 applications	Insert full stops/periods
Chapter 4 applications	no fill
Chapter 6 applications	zero (0) fill
Chapter 7 applications	blank fill

Chapters 4 and 7 Applications

The day(s) always relate to the Scheduled Time of Aircraft Departure (STD)—not the Passenger STD.

Chapter 7 Application

The Day(s) of Operation relate to each leg of the flight.

Consequently, downline legs of a flight having an STD on the next (or previous) day(s) shall have the Day(s) of Operation adjusted correspondingly in relation to the Day(s) of Operation on the first leg.

DEPARTURE DATE DEI – – –

The departure date of an aircraft		
Application	**Format**	**Example**
Chapter 6	nnaaa	20NOV

Chapter 6 Application

The element describes the date of departure of an aircraft from the Clearance/Advice Airport for flights operating on single dates.

The element is used where the departure is an initial departure, and not associated with any same or previous day arrival.

DESTINATION STATION DEI – – –

The airport of final destination of the aircraft with the same departure Flight Designator.		
Application	**Format**	**Example**
Chapter 6	aaa	SYD

Use

This field is mandatory when final destination is different from Next Station.

Values

Refer to the IATA 3-lettter Location Identifiers.

DUPLICATE AIRLINE DESIGNATOR MARKER DEI – – –

Identification of a duplicate airline designation		
Application	**Format**	**Example**
Chapter 7	X	X

Chapter 7 Application

Used to specify that the data in the IATA Airline Designator (bytes 3–4) in Record Type 2 refers to a duplicate IATA designator and, as a result, the identity (name) of the airline must be stated in bytes 109–149 as part of ‘General Information’.

DUPLICATE LEG CROSS REFERENCE—DUPLICATE LEG IDENTIFICATION DEI 10

The Flight Designator(s) (and Operational Suffix, when applicable) of flight leg(s) that are duplicates, due to commercial/technical reasons, of this operational leg		
Application	**Format**	**Example**
Chapters 4,5	xx(a)nnn(n)(a) [/xx(a)nnn(n)(a)....]	ABC123/DEF012A
Chapter 7	xx(a)(n)(n)(n)n(a) [/xx(a)(n)(n)(n)n(a)....]	ABCØ123Ø/DEFØØ12A

→ *For further guidance, refer to Appendix H: Duplicate Flight Legs*

Use

This data element can only be applied to an operational leg.

As such, it cannot be used in conjunction with a segment that is not also a leg.

The Flight Designators (and Operational Suffix, when applicable) of the duplicated leg(s) are listed in this data element.

Chapters 4, 5 and 7 Applications

In the extreme case of maximum line length being exceeded in Chapters 4, 5 and 7, all additional Flight Designators (and Operational Suffix) not accommodated within the available line/record length shall be stated by repeated use of Data Element Identifier 10.

Segment Information lines (Chapters 4 and 5) and Segment Data Records (Chapter 7) pertaining to Data Element Identifier 10 shall be kept as one group and be interpreted as one single data element.

Updated transmissions of the same flight or flight leg(s) replace the complete previous set of lines/records irrespective of the number of lines/records transmitted.

Note 1: *The duplicate Flight Designator(s) leg must have the Duplicate Leg Cross Reference—Operational Leg Identification data element specifying the operational Flight Designator*.

Note 2: *Use of this data element is as important for operational functions as it is for commercial functions*.

Note 3: *Some receiving systems may make flight display decisions based on data present in this data element and, in some cases, based on the order of the Duplicate Leg Identifications*.

DUPLICATE LEG CROSS REFERENCE—OPERATIONAL LEG IDENTIFICATION DEI 50

The Flight Designator (and Operational Suffix, when applicable) of the operational flight leg of which this flight leg is a duplicate		
Application	**Format**	**Example**
Chapters 4,5	xx(a)nnn(n)(a)	ABC001A
Chapter 7	xx(a)(n)(n)(n)n(a)	ABC0001A

→ For further guidance, refer to Appendix H: Duplicate Flight Legs

Use

This data element can only be applied to non-operational legs (duplicate Flight Designator leg(s)).

As such, it cannot be used in conjunction with a segment that is not also a leg.

The Flight Designator (and Operational Suffix, when applicable) of the operational flight leg is listed in this data element.

Note 1: *The operational Flight Designator leg must have a Duplicate Leg Cross Reference—Duplicate Leg Identification data element specifying the duplicate Flight Designator(s)*.

Note 2: *Use of this data element is as important for operational functions as it is for commercial functions*.

Note 3: *For use of DEI 50 in Electronic Ticketing Procedures, refer to IATA Resolution 722f and 722g and A4A Resolutions 20.60 and 20.61*.

ELECTRONIC TICKETING INFORMATION DEI 505

Identification of a flight leg as an Electronic Ticketing Candidate		
Application	**Format**	**Example**
Chapters 4,5	aa	EN
Chapter 7	aa	ET

→ For further guidance, refer to Appendix H: Electronic Ticketing Information and PSC Resolutions 722f/g/h

Default: *In the absence of any information to the contrary, it is assumed that the default situation for a Carrier is **"EN"**.*

A default can be specified for a Carrier in one of the following ways:

(a) For Chapter 7, by using bytes 189 and 190 of Record Type 2.

(b) By bilateral agreement between the parties concerned.

Note: *It is not possible to transmit a default for a Carrier using Chapters 4 or 5.*

Use

Used to identify whether or not a flight leg is an Electronic Ticketing Candidate.

When a segment is made up of more than one leg, the segment can be an Electronic Ticketing Candidate only if all the legs contained within the segment are designated for Electronic Ticketing Candidates. (See Appendix H, 'Electronic Ticketing Information' and 'Legs/Segments'.)

For example, in the case of an itinerary AAA-BBB-CCC-DDD, where legs AAA-BBB and BBB-CCC are Electronic Ticketing Candidates, and leg CCC-DDD is not an Electronic Ticketing Candidate, the segments AAA-BBB, BBB-CCC, and AAA-CCC are Electronic Ticketing Candidate, because both the constituent legs/segments AAA-BBB and BBB-CCC are Electronic Ticketing Candidates.

However, the segments AAA-DDD and BBB-DDD are not Electronic Ticketing Candidates, because they contain the leg CCC-DDD that is not an Electronic Ticketing Candidate.

Values

EN	Not Electronic Ticketing Candidate
ET	Electronic Ticketing Candidate

ERROR LINE DEI – – –

Identification of the message line number on which an error was found		
Application	**Format**	**Example**
Chapters 4,5	nnn	123

Use

May be used in a Standard Schedules Message (SSM), or in an Ad Hoc Schedules Message (ASM), with Action Identifier **"NAC"**.

When a message cannot be processed successfully, the recipient may send an SSM or ASM message, using Action Identifier **"NAC"**, to advise the sender of the original message that the message content has not been successfully processed in the recipient's system. Error Line identifies a line number in the original message or submessage containing an error.

Error Line is always followed by a space and then a Reject Reason to explain the error.

The line count commences at the first mandatory line (i.e. the Action Identifier) in the message, or submessage, received.

When the error found in a message is not related to a specific line number, 000 should be used as the line number.

FLAGLANDING AT BOARD POINT ONLY DEI 303

Indication that a flaglanding occurs at the Board Point only		
Application	**Format**	**Example**
Chapters 4,5,7	*	*
***The Data Element Identifier implies this condition. No additional data is required**.		

FLAGLANDING AT OFF POINT ONLY DEI 301

Indication that a flaglanding occurs at the Off Point only		
Application	**Format**	**Example**
Chapters 4,5,7	*	*
***The Data Element Identifier implies this condition. No additional data is required**.		

FLAGLANDING AT OFF POINT AND BOARD POINT DEI 302

Indication that a flaglanding occurs at both the Off Point and the Board Point		
Application	**Format**	**Example**
Chapters 4,5,7	*	*
***The Data Element Identifier implies this condition. No additional data is required**.		

FLIGHT DESIGNATOR DEI – – –

Identification of the flight or a series of similar flights operated by a carrier		
Application	**Format**	**Example**
Chapter 3	xx(a)(→)n(n)(n)(n)	QF150
Chapters 4,5,6	xx(a)nnn(n)	QF002
Chapter 7	xx(a)(n)(n)(n)n	QFØØØØ2

Use

The Flight Designator consists of:

(a) Airline Designator of the Administrating Carrier; and

(b) Flight Number (optional in some Slot/Schedule and Waitlist messages in Chapter 6).

Note: *For commercial joint operations in connection with the presentation of schedules information to the public, reference should be made to the Joint Operation Airline Designators data element.*

FLIGHT IDENTIFIER DEI – – –

Identification of a unique flight operated on a specific date			
Application		**Format**	**Example**
Chapter 5	Airline Designator	xx(a)	AB
	Flight Number	nnn(n)	1234
	Operational Suffix	(a)	A
	Separator	/	/
	Flight Identifier Date	nn(aaa(nn))	06APR

→ For further guidance, refer to Appendix H: Time Mode

Use

The Flight Identifier is a composite data element, used only in ASM messages in Chapter 5, consisting of:

(a) The Flight Designator (consisting of Airline Designator and Flight Number);

(b) Optionally the Operational Suffix (see Operational Suffix for explanation regarding a description of the element and its use in various situations);

(c) A sub-element separator which is a slash (/);

(d) The Flight Identifier Date from the station of origin.

Rules are specified separately for data elements (a), (b) and (d) above.

Example:

AB1234A/06APR

FLIGHT IDENTIFIER DATE DEI – – –

The date of the scheduled aircraft departure from the station of origin expressed in abbreviated alphanumeric format		
Application	**Format**	**Example**
Chapter 5	nn(aaa)(nn)	07OCT01

Use

The Flight Identifier Date must conform to the applicable time mode.

The abbreviated alphanumeric format consists of:

(a) Date expressed in two digits in the range of 01–31;

(b) Month given in three alphabetic characters and is always the first three alphabetic characters of the month in English spelling.

The month may be omitted but only when the operation referred to is within 3 days of the current date;

(c) Year expressed by last two digits of the year.

This is mandatory for dates more than 11 months from current date.

It is optional in all other cases.

FLIGHT LEG(S) CHANGE IDENTIFIER DEI – – –

Identification of the leg or group of consecutive legs that are affected by a change		
Application	**Format**	**Example**
Chapters 4,5	aaa/aaa(/aaa)... (max. 12 Stations)	BCN/HAM/CPH

Use

The Flight Leg(s) Change Identifier consists of:

(a) The first Station affected by a change;

(b) A data element separator by means of a slash (/);

(c) All subsequent Stations affected by the change, each station being separated by a slash.

Chapter 4 Application

The notification of intermediate stations is optional for SSM messages in Chapter 4.

For the Action Identifiers “EQT” and “CON” the FLCI is conditional and is submitted on the Routing or Leg Information line. The routing supplied in the FLCI refer to the preceding Equipment Information line. Therefore the information given in the Equipment Information line applies only to the leg(s) stated in the FLCI.

For the Action Identifier “ADM” the FLCI replaces the stations and timings of Routing or Leg Information line(s). Therefore only the DEIs 1, 2, 3, 4, 5, 6, 7, 9 stated in that line apply only to the

leg(s) stated in the FLCI. Other DEIs referring to any segment of the entire routing may be stated in Segment Information line(s).

Chapter 5 Application

For ASM messages the FLCI is part of the Flight Information and therefore part of the identifier, i.e. the information stated in the ASM message relates to the leg or group of legs mentioned in the FLCI.

FLIGHT NUMBER DEI – – –

A multi-purpose reference assigned by a carrier in connection with the planning and control of the operation of flights		
Application	**Format**	**Example**
Chapter 3	n(n)(n)(n)	83
Chapters 4,5,6	nnn(n)	123
Chapter 7	(n)(n)(n)n	ØØØ 2

→ For further guidance, refer to Appendix H: Fictitious Points; Time Mode; and Train Stations at Multi-Terminal Airports.

Use

In order to facilitate interline information exchange the following rules shall be applied and considered when assigning Flight Numbers. These rules must be observed without regard to leading zeros.

Failure to observe them may result in the inability of some systems to process the data.

(a) The Flight Number shall identify a flight or series of similar flights.

(b) The Flight Number shall be assigned such that it applies to only one scheduled departure from origin station per day (UTC and local).

For UTC applications (including Airport Clearance/Advice), the Operational Suffix when used shall be considered to be part of the Flight Number for this purpose.

(c) At any given station on any one date (UTC and local) there may only be at most one scheduled departure and at most one scheduled arrival with the same Flight Number. This rule applies to ALL Stations in the flight routing. For UTC applications (including Airport Clearance/Advice) the Operational Suffix when used shall be considered to be part of the Flight Number for this purpose.

(d) The Flight Number shall be assigned for a flight such that no one station on the routing may occur more than once except that the origin station may be the same as the final destination station.

(e.g. AAA-AAA and AAA-BBB-CCC-AAA are permitted; AAA-BBB-CCC-AAA-DDD is not permitted).

(e) The Flight Number may consist of up to 4 numeric digits (see format above), except that in Chapters 4, 5 and 6, a minimum of 3 digits, zero filled as necessary, is mandatory.

The Flight Number is to be used in accordance with the format set out in PSC Resolution 761 which governs the rules affecting Flight Number.

(f) The Flight Number must never appear on its own but must always form part of the Flight Designator.

Note 1: *This field is fixed formatted, right justified and zero and/or blank filled in respect of Chapter 7 Schedule Data Set formats*.

Note 2: *It should be assumed that, when leading zeros appear as part of a number in the Flight Number field, they should be included with the Flight Number for commercial display purposes. If it is required to be specific as to whether leading zeros should be used for commercial display purposes, then Data Element 122 (Flight Number Override) must be provided to specify the Flight Number with or without the leading zeros*.

Note 3: *The use of leading zeros does not create a different Flight Number. For example, Flight Numbers* 123 *and* 0 123 *are the same*.

FLIGHT NUMBER OVERRIDE DEI 122

Identification of Flight Number by a carrier for commercial display purposes		
Application	**Format**	**Example**
Chapters 4,5,7	n(n)(n)(n)	0123

Use

This Data Element enables carriers to override an existing Flight Number. It is used to be specific as to whether or not leading zeros should be used for commercial display purposes.

The use of leading zeros does not create a different Flight Number. For example, Flight Numbers 123 and 0123 are the same.

Flight Number Override **cannot** be used to overcome UTC or Local day duplication problems.

FLIGHT TRANSIT LAYOVER DEI – – –

Indication that there is a layover of the flight at the leg arrival station of 24 hours or more between the arrival and the departure of the next leg of the same flight		
Application	**Format**	**Example**
Chapter 7	n	1

Values

1	24 to 47.59 hours layover
2	48 to 71.59 hours layover, etc.

FREQUENCY RATE DEI – – –

An indication that a flight operates at fortnightly intervals (every 2 weeks) on the day(s) of the week stated under Day(s) of Operation		
Application	**Format**	**Example**
Chapter 4	/an	/W2
Chapters 6,7	2	2

Default *When the data element is not stated, the default applies, i.e. the flight operates at weekly intervals on the day(s) of the week stated under Day(s) of Operation*.

Use

When the Frequency Rate is used, the start date of the Period of Operation must be the first date on which the flight operates, and the end date must be the last date on which the flight operates. The start and end dates may **not** be expressed as **"00XXX00"** or **"00XXX"**.

Chapter 6 application for slot coordination purposes

The Frequency Rate may not be used when submitting, deleting or changing flights that do not consist of a series of flights (five or more slots). It is also recommended that flights filed with a Frequency Rate are filed separately for each day of the week they might operate.

GENERAL INFORMATION DEI – – –

Optional free text that does not directly relate to the data lines in the message		
Application	**Format**	**Example**
Chapter 6	GI → XXX...	GI BRGDS...
Chapter 7	xxx... (82 char.)	LASTØ SSMØ REFLECTEDØ 02145001ØØØØØØØØØ

Chapter 6 Application

It always starts on a new line, after all data lines and any Supplementary Information have been stated.

It always begins with the character combination **"GI"**, followed by a blank space, and then, the free text information.

Chapter 7 Application

General Information is an optional 61 byte field in Record Type 2 used for free text relating to the contents, use, restrictions etc. of the data set.

If the Duplicate Airline Designator Marker (byte 108) has been set in Chapter 7, bytes 109–149 are reserved for specification of name of the airline.

HISTORIC SLOT REASON DEI – – –

Information provided by Coordinators to advise airlines of their reason(s) why a slot cannot be considered as historic		
Application	**Format**	**Example**
Chapter 6	x(x)(x)	N80

Chapter 6 Application

Used within the SHL message.

Values

Refer to SSIM 6.3.1.

INCOMING MESSAGE REFERENCE DEI – – –

The message reply reference to a Slot/Schedule or Waitlist message		
Application	**Format**	**Example**
Chapter 6	REYT/x(x)(x)(x)(x)... (max. 35 characters)	REYT/ABC011 S80/05APR

Format

The reference abbreviation **"REYT"** and the Creator Reference as used by the request/information originator.

IN-FLIGHT SERVICE INFORMATION DEI 503

In-flight service information provided on individual flight legs		
Application	**Format**	**Example**
Chapters 4,5	n(n)(n)(/n(n)(n))...	1/7/8
Chapter 7	(n)(n)n/(n)(n)n...	01/07/12

Format

The format incorporates the possibility to expand the code list to three-digit codes.

Default usage:

- *Default values can only be submitted using chapter 7. It is not possible to transmit defaults for a Carrier using Chapters 4 or 5.*
- *In the absence of any information provided to the contrary, code "9" (non smoking) applies.*
- *Should a Carrier wish to change the default from Non-smoking to Smoking for a given flight leg, this can be accomplished by using the DEI 503 with the value "8".*
- *Any default value(s) specified applies all services of the Carrier and not just to the services of that Carrier for the stated Period of Schedule Validity.*
- *Where a Carrier has provided default value(s), but wishes to state additional In-Flight Service Information codes for specific flight legs, the In-Flight Service Information stated for such flight legs must contain ALL codes applicable to that flight leg, including a repeat of any such codes contained in the default value(s) for the Carrier.*
- *Defaults for all in-flight services can be specified for a Carrier in one of the following ways:*
  - (a) *For Chapter 7, by using bytes 170 to 188 of Record Type 2 to specify up to five defaults.*
  - (b) *By bilateral agreement between the parties concerned.*

Use

It is the responsibility of the information sender to ensure that In-Flight Service Information codes used do not contradict each other.

For example, use of codes **"8"** and **"9"** on the same flight leg is contradictory, since either the flight leg is all 'Non-smoking', or 'smoking' is allowed on some parts of the aircraft.

In cases where a Carrier has provided default values, but wishes to entirely remove all values for a Y specific flight leg, this may be accomplished by using **"NIL"**, instead of an In-Flight Service Information code.

For example:

In Chapter 7: AB503AAABBBNIL

In cases where only some of the values supplied in the default need to be removed, carriers need to state the remaining values in a DEI 503.

Chapters 4 and 5 Applications

The maximum line length constraint of 58 characters must be protected.

In cases where a Carrier has previously provided in flight service values, but wishes to entirely remove all values for a specific flight leg, this may be accomplished by using **"NIL"**, instead of an In-Flight Service Information code.

In Chapters 4 and 5: AAABBB 503/NIL

Values

The codes to be used are jointly agreed with the Passenger and Airport Data Interchange Standards (PADIS) Board.

1	Movie	
2	Telephone	
3	Currently unused	SISC/64
4	Audio programming	
5	Television	
6	Reservation booking service	
7	Duty Free sales	
8	Smoking	
9	Non-smoking	
10	Short Feature Video	
11	No Duty Free sales	
12	In-seat power source	
13	Internet access	
14	Currently unused	SISC/64
15	In-seat Video Player/ Library	
16	Lie-flat Seat	SISC/58
17	Additional Services	SISC/59
18	Wi-Fi	SISC/63

ITINERARY VARIATION IDENTIFIER (IVI) DEI – – –

A number used to differentiate between itineraries having the same Flight Designator (without regard to Operational Suffixes, if any).
An **Itinerary** is a single flight or a series of identical flights defined by a continuous Period and Day(s) of Operation (and Frequency Rate if applicable), each of which consists of one or more contiguous legs which, taken together, describe a complete routing of that flight.

Application	Format	Example
Chapter 7	nn	02

→ *For further guidance, refer to Appendix H: Daylight Saving Time*

Format

A number between 01 and 99

Use

Itinerary Variation Identifiers shallbe assigned such that the itinerary with the earliest effective date shall be assigned IVI **"01"**, that with the next effective date, IVI **"02"**, etc.

Where two or more itineraries have equal effective dates, the itinerary with the earliest discontinue date shall be assigned the smallest IVI, etc; where two or more itineraries have the same Period of Operation, IVIs are then assigned in any order.

This does not preclude the use of the identifier in describing a flight for any other reason, that is to say splitting records and giving them more than the number of Itinerary Variation Identifiers strictly necessary.

Note: *When more than 99 IVIs are required for the same Flight Designator, use should be made of the Itinerary Variation Identifier Overflow data element.*

In such cases, the IVI may equal **"00"***, when the true IVI is '100', '200', etc.*

Examples of use of Itinerary Variation Identifier

REMARKS	IVI	Leg Sequence Number	Flight Designator	Oper-ational Suffix	Period of Operation	Day(s) of Operation	Routing	A/C Type	Configur-ation
Legal because repeats the leg A-B to avoid ambiguity.	01	01	ABC123		01APR310CT	123456	A -B	767	Y
	02	01	ABC123		01APR310CT	7	A -B	767	Y
	02	02	ABC123		01APR310CT	7	B -C	767	Y
Illegal because no way of knowing that A-B-C operates through-out the season on day 7 because IVI 02 has no leg 01	01	01	ABC123		01APR310CT	1234567	A -B	767	Y
	02	02	ABC123		01APR310CT	7	B -C	767	Y
Legal (Two Itinerary Variation Identifiers because of routing change)	01	01	ABC123		01APR310CT	123456	A -B	747	FY
	01	02	ABC123		01APR310CT	123456	B -C	747	FY
	02	01	ABC123		01APR310CT	7	A -C	747	FY
Legal (Two Itinerary Variation Identifiers because of day change)	01	01	ABC123		01APR310CT	123456	A -B	747	FY
	01	02	ABC123		01APR310CT	123456	B -C	747	FY
	02	01	ABC123		01APR310CT	7	B -C	747	FY
Legal	01	01	ABC123		01APR310CT	12345 7	A -B	M80	FY
	01	02	ABC123		01APR310CT	12345 7	B -C	M80	FY
	02	01	ABC123		01APR310CT	6	A -B	M80	FY
	02	02	ABC123		01APR310CT	6	B -D	M80	FY
Illegal because IVI 01 has different days of operation for legs 01 and 02 and also because IVI 02 has no leg 01	01	01	ABC123		01APR310CT	1234567	A -B	M80	FY
	01	02	ABC123		01APR310CT	12345 7	B -C	M80	FY
	02	02	ABC123		03JUL31JUL	6	B -C	M80	FY
Legal Aircraft change	01	01	ABC123		01APR310CT	1234	A -B	767	FY
	01	02	ABC123		01APR310CT	1234	B -C	767	FY
	02	01	ABC123		01APR310CT	567	A -B	M80	FY
	02	02	ABC123		01APR310CT	567	B -C	M80	FY
Legal whole route described within IVI and Leg Sequence Number	01	01	ABC123		01APR310CT	1234	A -B	767	Y
	01	02	ABC123		01APR310CT	1234	B -C	M80	Y
Legal Configuration change	01	01	ABC123		01APR310CT	1234	A -B	ERJ	FY
	01	02	ABC123		01APR310CT	1234	B -C	ERJ	FY
	02	01	ABC123		01APR310CT	567	A -B	ERJ	Y
	02	02	ABC123		01APR310CT	567	B -C	ERJ	Y
Legal provided that leg 02 departs on the next day	01	01	ABC123		01APR310CT	1 3 5	A -B	744	PJY
	01	02	ABC123		02APR01NOV	2 4 6	B -C	744	PJY
	02	01	ABC123		01APR310CT	2 4 67	A -B	777	PJY
	02	02	ABC123		02APR01NOV	1357	B-C	777	PJY
Illegal because the Operational Suffix has been considered as part of the Flight Designator in assigning the IVI	01	01	ABC123		01APR240CT	1234567	A -B	ERJ	FY
	01	01	ABC123	Z	24OCT24OCT	7	A -B	ERJ	FY
Legal	01	01	ABC123		01APR240CT	1234567	A -B	ERJ	FY
	02	01	ABC123	Z	24OCT24OCT	7	A -B	ERJ	FY
Legal on a multi-leg flight, the oper-ational suffix is applied to both legs	01	01	ABC123	A	01APR310CT	1234567	A -B	767	Y
	01	02	ABC123	A	01APR310CT	1234567	B -C	767	Y
Illegal on a multi-leg itinerary, the suffix must apply to all legs of the itinerary	01	01	ABC123	A	01APR310CT	1234567	A -B	767	Y
	01	01	ABC123	-	01APR310CT	1234567	B -C	767	Y
Legal on a single leg flight the oper-ational suffix has been applied to the itinerary	01	01	ABC123		01APR310CT	1234567	A -B	767	Y
	02	01	ABC123	A	24OCT24OCT	7	A -B	767	Y

ITINERARY VARIATION IDENTIFIER OVERFLOW DEI – – –

The number of hundreds to be added to the number in the IVI field to give the true IVI		
Application	**Format**	**Example**
Chapter 7	n	2

Format

A one byte conditional field in Chapter 7 Record Types 3 and 4

Use

The Itinerary Variation Identifier Overflow data element is used when more than 99 IVIs are required for the same Flight Designator.

Chapter 7 Application

The element specifies how many hundreds, with a value of between 1 and 9, need to be added to the number in the IVI field to give the true number of IVIs.

For example, if the IVI field contains **"34"**, and the IVI Overflow field contains **"2"**, then the true IVI is "234" (i.e. 34 plus 200).

The field should be left blank when the true IVI is less than 100.

JOINT OPERATION AIRLINE DESIGNATORS DEI 1

Identification of flights or legs of flights jointly operated by two or more carriers		
Application	**Format**	**Example**
Chapters 4,5	xx(a)/xx(a)(/xx(a))	AB/BC/DE
Chapter 7	xx(a)xx(a)((x)(x)(a))	ABØBCØDEØ
DEI 1 is only applicable to Chapters 4 and 5		

→ For further guidance, refer to Appendix H: Commercial Agreements between two or more Airlines

Note: *For descriptions of other data elements applicable to Commercial Agreements, see* ***Operating Airline Disclosure—Shared Airline or Wet Lease Designation and Operating Airline Disclosure—Code Share****.*

Use

Joint Operations always involve both an Administrating Carrier, (i.e., the airline which schedules the flight) and a Reservations Control Carrier, (i.e., the airline which controls the reservations for the flight).

Irrespective of how many carriers participate in such a joint operation, there can be only one Administrating Carrier and **one** Reservations Control Carrier.

The Administrating Carrier's Airline Designator will appear as part of the Flight Designator of the joint operation.

The Reservations Control Carrier will be the first (i.e., 'left-hand') carrier named in the series of Airline Designators used to denote the joint operation.

All Joint Operation Airline Designators common to each of the legs making up the segment shall be deemed to be Joint Operation Airline Designators on the segment, unless specified otherwise by using the Joint Operation Airline Designators Segment Override, which is also used to specify joint operation on multi-leg segments.

Example:

> Carrier XA operates flight 901 over itinerary AAA-BBB-CCC, and is in joint operation with carrier XB from BBB to CCC. Furthermore, carrier XB controls all reservations boarding BBB.
>
> The Flight Designator of this service will be XA901.
>
> The Joint Operation Airline Designators for the leg BBB-CCC will be XB/XA.

Chapters 4, 5 and 7 Applications

The Joint Operation Airline Designators consist of:

(a) Data Element Identifier, always the digit 1 (not applicable in Chapter 7);

(b) The Airline Designators for a minimum of 2 and a maximum of 3 carriers and appearing in the order as agreed by the carriers concerned.

(The Airline Designator of the Administration Carrier need not necessarily be shown first. See above.)

JOINT OPERATION AIRLINE DESIGNATORS SEGMENT OVERRIDE DEI 125

Specification of a joint operation over a segment differing from what applies to the legs within the segment		
Application	**Format**	**Example**
Chapters 4,5,7	xx(a)/xx(a)(/xx(a))	ABC/DEF

→ *For further guidance, refer to Appendix H: Commercial Agreements between two or more Airlines*

Use

The data element **either** overrides the information given under Joint Operation Airline Designator for the legs of a flight within the stated segment, **or** specifies the joint operation on a multi-leg segment in cases where there is no joint operation on the individual legs that constitute the stated segment.

It is also permissible to specify a single Airline Designator using this facility, which, if equivalent to the Administrating Carrier, indicates the absence of joint operation over the segment specified and, if different from the Administrating Carrier, indicates the alternative Reservations Control Carrier applicable to the segment.

LEG SEQUENCE NUMBER DEI – – –

The sequence number of the leg for the flight and itinerary variation being specified within each Itinerary Variation Identifier		
Application	**Format**	**Example**
Chapter 7	nn	03

Format

2 numeric bytes to recommended maximum of 20 legs.

MEAL SERVICE NOTE DEI 7

Indicates the meal service provided on a leg.		
Application	**Format**	**Example**
Chapters 4,5	aa(a)(/aa(a))... (max. 5 classes) or /a(a) or aa(a)(/aa(a))...(//a(a)) (max. 5 groups)	FL/CS/YS or /B or CL//S
Chapter 7	a(a)(a)(a)(a)(a)(a)(a)(a)(a)	LSLØLØØØØØ
DEI 7 is only applicable to Chapters 4 and 5		

Note: *The Meal Service Notes applicable to each of the legs in a segment shall apply to the segment unless otherwise stated using Data Element Identifier 111 (Meal Service Segment Override).*

→ For further guidance, refer to Appendix H: Aircraft Seating Description

Use

To indicate the meal service provided on a leg, and is primarily used for public information purposes.

The note may include up to two meal codes for each class.

The absence of a meal service code for any or all Classes indicates that there is *'No meal service information available'*, and not *'No meal'*. To specifically state that there is *'No meal'* code N should be used.

Chapters 4, 5 and 7 Applications

The Meal Service Note consists of:

(a) Data Element Identifier, always the digit 7 (not applicable in Chapter 7);

(b) For Chapters 4 and 5 variable format coding with one or two codes per class (as specified in the Passenger Reservations Booking Designator, or Aircraft Configuration/Version as applicable) preceded by a Class Code in the Passenger Reservations Booking Designator.

The Passenger Reservations Booking Designator Codes and their associated Meal Code(s) must be separated by a slash (/). A simpler specification can be made if meal service is equal in all classes, or within a trailing group of classes as specified in the Passenger Reservations Booking Designator. In this case, the first class code (of the group) is replaced by a slash (/) and no subsequent classes need to be specified;

(c) For Chapter 7, a fixed format 10 byte field, with 2 bytes per class (as specified in the Passenger Reservations Booking Designator, or Aircraft Configuration/Version as applicable), blank filled, with the first 2 bytes specifying the meal(s) applicable to the first class stated, the next 2 bytes to the next class, and so on;

(d) Whenever Meal Codes for more than one class are given, the Meal Codes must be stated in the same order as the corresponding class codes in the Passenger Reservations Booking Designator or Aircraft Configuration/Version, as appropriate;

(e) For Chapters 4 and 5, in the case of no Meal Service for a class, all the classes having a Meal Service shall be specified. The simplified specification (see (b) above) shall not be used;

(f) If the Meal Service Note is applicable to more than 5 classes (including a non-specified group of classes in Chapters 4 and 5), **"XX"** will be stated on the first two positions.

This indicates that reference should be made to Data Element Identifier 109 (Meal Service Note Exceeding Maximum Length) for full Meal Service Note specification.

(g) In cases where both ACV and PRBD are used, the Meal Service Note shall apply to the PRBD.

Values

Refer to SSIM Appendix B.

MEAL SERVICE NOTE EXCEEDING MAXIMUM LENGTH DEI 109

Identification of the full Meal Service Information applicable for more than 5 classes of service		
Application	**Format**	**Example**
Chapters 4,5	aa(a)/aa(a)/aa(a)/ aa(a)/aa(a)/aa(a)...(//a(a))	FBS/JB/YS/MS/BS/KS/LS/MS/QS Or FBS/JB//S
Chapter 7	(a)(a)(a)(a)(a)(a) (a)(a)(a)(a)(a)...	BSBØSØSØSØSØSØSØ

Use

A **"NIL"** statement is not required when previous information transmitted about the same flight leg is modified to the extent that Data Element Identifier 109 is not required.

In the absence of Data Element Identifier 109, it is assumed that the complete Meal Service Note is contained within Data Element Identifier 7 (Chapters 4, 5) and in the Type 3 Record bytes 101–110.

Chapters 4 and 5 Applications

Data Element Identifier 109 can include a non-specific group of classes.

The maximum line length constraint of 58 characters must not be exceeded.

In the extreme case of maximum line length being exceeded in Chapters 4, 5 all additional meal services not accommodated within the available line/record length shall be stated by repeated use of Data Element Identifier 109.

Segment Information lines (Chapters 4 and 5) pertaining to Data Element Identifier 109 shall be kept as one group and be interpreted as one single data element.

Updated transmissions of the same flight or flight leg(s) replace the complete previous set of lines/records irrespective of the number of lines/records transmitted.

MEAL SERVICE SEGMENT OVERRIDE DEI 111

Information provided by carriers to specify the meal service information that applies to a segment, and not leg by leg			
Application	**Format**	**Example**	
Chapters 4,5	aa(a)/aa(a)/aa(a)/ aa(a)/aa(a)/aa(a)...(//a(a))	JB/DB/IS/YS/KM/MM Or JMS/CMS/DMS/IMS/YS/KS/MS	△
Chapter 7	aa(a)/aa(a)/aa(a)/ aa(a)/aa(a)/aa(a)...	JB/DB/IS/YS/KM/MM Or JMS/CMS/DMS/IMS/YS/KS/MS	△

→ For further guidance, refer to Appendix H: Aircraft Seating Description

Use □

A meal override can be specified in DEI 111 where the meals offered on the segment (stopping leg) are not the same are the meals offered on each non-stop leg.

The DEI 111 is not dependent on a DEI 101 Class override being supplied.

Chapters 4 and 5 Applications

Data Element Identifier 111 can include a non-specific group of classes. The maximum line length constraint of 58 characters must not be exceeded.

In the extreme case of maximum line length being exceeded in Chapters 4, 5 all additional meal services not accommodated within the available line/record length shall be stated by repeated use of Data Element Identifier 111.

Segment Information lines (Chapters 4 and 5) pertaining to Data Element Identifier 111 shall be kept as one group and be interpreted as one single data element.

Once DEI 111 is repeated, use of the '//' simpler specification should not be used.

Updated transmissions of the same flight or flight leg(s) replace the complete previous set of lines/records irrespective of the number of lines/records transmitted.

Examples of use of DEI 111

When a DEI 111 is supplied, the classes are the same on both non-stop legs, only the meal on the segment is different.

```
3 MH 3840101J05OCT1227OCT121234567 KCH09000900+0800 BKI10301030+08001 738JDIYKM
MMSSBB
4 MH 3840101J    AB503KCHBKI 9
4 MH 3840101J    AB505KCHBKIET
4 MH 3840101J    AC111KCHHKGB B S S M M
3 MH 3840102J05OCT1227OCT121234567 BKI11351135+08001 HKG14301430+08001 738JDIYKM
MMSSBB
4 MH 3840102J    BC010BKIHKGKA 1384
4 MH 3840102J    BC109BKIHKGM M S S B B
4 MH 3840102J    BC503BKIHKG 9
4 MH 3840102J    BC505BKIHKGET
```

```
SSM
LT
08OCT00005E001/OAG 1/638
RPL
MH384
08OCT12 27OCT12 1234567
J 734 JDIYKM.C16Y128VVMH734
KCH0900 BKI1030 7/JM/DM/IS/YS/KS/MS
BKI1135 HKG1430 7/JM/DM/IS/YS/KS/BS
KCHHKG 111/JB/DB/IS/YS/KM/MM
BKIHKG 10/KA1384
KCHBKI 98/1
BKIHKG 98/1
BKIHKG 99/1
KCHBKI 503/9
KCHBKI 505/ET
BKIHKG 503/9
BKIHKG 505/ET
```

When a DEI 101 class override has been supplied and both classes and meals are different for the stopping leg AC. ☐

```
3  MH  3840201J28OCT1230MAR131234567  KCH09000900+0800  BKI10301030+08001  738JDIYKM
MMSSBB
4 MH 3840201J    AB503KCHBKI 9
4 MH 3840201J    AB505KCHBKIET
4 MH 3840201J    AC101KCHHKGJCDIYKML
4 MH 3840201J    AC111KCHHKGB B B S M M S S
3  MH  3840202J28OCT1230MAR131234567  BKI11351135+08001  HKG14301430+0800  1738JDIYKM
MMSSBB
4 MH 3840202J    BC010BKIHKGKA 1384
4 MH 3840202J    BC503BKIHKG 9
4 MH 3840202J    BC505BKIHKGET
```

```
SSM
LT
08OCT00006E001/OAG 1/639
RPL
MH384
28OCT12 30MAR13 1234567
J 734 JDIYKM.C16Y128VVMH734
KCH0900 BKI1030 7/JM/DM/IS/YS/KB/MB
BKI1135 HKG1430 7/JM/DM/IS/YS/KB/MB
KCHHKG 101/JCDIYKML
KCHHKG 111/JB/CB/DB/IS/YM/KM/MS/LS
BKIHKG 10/KA1384
KCHBKI 98/1
BKIHKG 98/1
BKIHKG 99/1
KCHBKI 503/9
KCHBKI 505/ET
BKIHKG 503/9
BKIHKG 505/ET
```

☐ **If more than one meal is supplied:**

```
3  MH  3840301J31MAR1326OCT131234567  KCH09000900+0800  BKI10301030+08001  738JDIYKM
MMSSBB
4 MH 3840301J    AB503KCHBKI 9
4 MH 3840301J    AB505KCHBKIET
4 MH 3840301J    AC101KCHHKGJCDIYKML
4 MH 3840301J    AC111KCHHKGMSMSMSMSSSSS
3  MH  3840302J31MAR1326OCT131234567  BKI11351135+08001  HKG14301430+08001  738JDIYKM
MMSSBB
4 MH 3840302J    BC010BKIHKGKA 1384
4 MH 3840302J    BC109BKIHKGM M M M M M M M M M M M M M M M M
4 MH 3840302J    BC503BKIHKG 9
4 MH 3840302J    BC505BKIHKGET
```

```
SSM
LT
08OCT00007E001/OAG 1/640
RPL
MH384
31MAR13 00XXX00 1234567
J 734 JDIYKM.C16Y128VVMH734
KCH0900 BKI1030 7/JM/DM/IS/YS//B
BKI1135 HKG1430 7/JM/DM/IS/YS//B
KCHHKG 101/JCDIYKML
KCHHKG 111/JMS/CMS/DMS/IMS//S
BKIHKG 10/KA1384
KCHBKI 98/1
BKIHKG 98/1
BKIHKG 99/1
KCHBKI 503/9
KCHBKI 505/ET
BKIHKG 503/9
BKIHKG 505/ET
```

```
MH384
31MAR13 00XXX00 1234567
J 734 JDIYKMVSOG.C16Y128VVMH734
KCH0900 BKI1030 7//M
J 734 JCDIYBHKMLVSNQOG.C16Y128VVMH734
BKI1135 HKG1430 7//M
KCHHKG 101/JCDIYBHKMLVSN
KCHHKG 111/JMS/CMS/DMS/IMS/YS/BS/HS/KS/MM/LM/VM/SM
BKIHKG 10/KA1384
KCHBKI 98/1
BKIHKG 98/1
BKIHKG 99/1
KCHBKI 503/9
KCHBKI 505/ET
BKIHKG 503/9
BKIHKG 505/ET
```

⊗

MESSAGE GROUP SERIAL NUMBER DEI – – –

The number assigned from 00001 in ascending order each day to define the sequence of message groups for that day		
Application	**Format**	**Example**
Chapters 4,5	nnnnn	00004

Format

A 5 digit number that is part of the Message Sequence Reference.

MESSAGE SEQUENCE REFERENCE DEI – – –

Unique identification assigned by the originator of a Standard Schedules Message (SSM) or Ad Hoc Schedules Message (ASM) to indicate that there may be some other related part messages associated with the physical SSM or ASM			
Application		**Format**	**Example**
Chapters 4,5	Date of Message	nnaaa	27JAN
	Message Group Serial Number	nnnnn	00004
	Continuation/End Code	a	E
	Message Serial Number	nnn	001

Format

The Message Sequence Reference consists of:

(a) Date of Message;

(b) The Message Group Serial Number;

(c) The Continuation/End Code which will be **"C"** whenever there are more messages to follow, and **"E"** for the final message within the Message Group Serial Number;

(d) The Message Serial Number.

It is recommended to use the Message Sequence Reference when messages are decoded by a computer and must be processed in the same order as they are sent.

MESSAGE SERIAL NUMBER DEI – – –

The sequence of the message within the Message Group Serial Number		
Application	**Format**	**Example**
Chapters 4,5	nnn	001

Chapters 4 and 5 Applications

A 3 digit number that is part of the Message Sequence Reference.

MINIMUM CONNECTING TIME INTERNATIONAL/ DOMESTIC STATUS DEI – – –

Identification of the international/domestic status on each flight leg to control the correct generation of flight connections between two flights		
Application	**Format**	**Example**
Chapter 7	aa	DD

→ *For further guidance, refer to Appendix H: Minimum Connecting Time*

Default:

The country codes of the origin and destination stations on the flight leg are compared. When the countries are the same, the leg status is **"DD"** or domestic.

When the countries are different, the leg status is **"II"** or international.

This Data Element is only used in Chapter 7. In Chapters 4 and 5 when the status of the flight leg, or segment, for Minimum Connecting Time (MCT) application cannot be interpreted correctly based on this default, then use of Data Element Identifier 220 (Minimum Connecting Time International/ Domestic Status Override) is necessary.

Note: *The International/Domestic Status specified may be based on the default or known exceptions in applicable markets, rather than additionally using Data Element Identifier 220 to deal with the exceptions.*

*This means a leg status of **"DI"** or **"ID"** is possible when an exception applies.*

When a segment, that is not also a leg, differs from the default stated above, it is necessary to use Data Element Identifier 220 to specify the International/Domestic Status.

Chapter 7 Application

A two byte optional field in Record Type 3.

When used, it consists of two characters.

The first character specifies the departure status of either **"D"** for domestic or **"I"** for International, and the second character specifies the arrival status (**"D"** or **"I"**) of the specified leg.

Functional use of this Data Element requires the arrival status of one flight leg and the departure status of the connecting flight leg to be combined. This combined status, either **"DD", "II", "DI"** or **"ID"**, identifies the connection status for MCT application.

It is very important to correctly identify the connection status in order to find the accurate Minimum Connect Time data to use in the building of the connection travel option.

These principles apply equally when Data Element Identifier 220 has been used to specify International/Domestic Status.

Example 1: Single leg flight combinations

Flight Number	Board Point	Departure D/I	Off Point	Arrival D/I	D/I Definition
1	YUL	I	ORD	D	International departure from YUL with domestic arrival in ORD.
20	ORD	D	LAX	D	Domestic departure from ORD with domestic arrival in LAX.
330	LAX	I	HKG	I	International departure from LAX with international arrival in HKG.
4400	HKG	I	SIN	I	International departure from HKG with international arrival in SIN.

The resulting values for MCT application at ORD, LAX and HKG are as follows:

Connect Point	D/I Status for MCT	Domestic/International Definition
ORD	DD	Domestic arrival in ORD and domestic departure to LAX
LAX	DI	Domestic arrival in LAX and international departure to HKG
HKG	II	International arrival in HKG and international departure to SIN

Example 2: A multi leg flight combination

Flight Number	Board Point	Departure D/I	Off Point	Arrival D/I	D/I Definition
19	SYD	I	HNL	I	International departure from SYD with international arrival in HNL,
	HNL	D	LAX	D	*Flight continues...* Domestic departure from HNL with domestic arrival in LAX.
237	LAX	D	BOS	D	Domestic departure from LAX with domestic arrival in BOS.

The resulting value for MCT application at LAX, regardless of whether the origin point is SYD or HNL, is the same:

Connect Point	D/I Status for MCT	Domestic/International Definition
LAX	DD	Domestic arrival in LAX and domestic departure to BOS

MINIMUM CONNECTING TIME INTERNATIONAL/ DOMESTIC STATUS OVERRIDE DEI 220

Information required to control of the correct generation of flight connections		
Application	**Format**	**Example**
Chapters 4,5,7	a/a	D/I

Use

Used when the status (Domestic or International) of the flight leg or segment for Minimum Connecting Time (MCT) application cannot be interpreted unambiguously.

It may also be applied to override the status normally derived from analyzing the routing of the flight. The use of this data element uniquely defines if a flight leg or segment shall be processed for MCT application as Domestic or International individually at both Board Point and Off Point.

In cases where this data element has not been used, and the status (Domestic or International) of, say, an arriving flight at a Station is either ambiguous, or different to that which would be derived from the default interpretation, it is likely that the Minimum Connecting Time used for any passengers with onward connections booked from the arrival station will be wrong. This could result in passengers and/or their baggage missing their onward flight.

The default interpretation is that where the Countries of origin and destination are the same, the status is domestic, and where they are different, the status is international.

Chapters 4, 5 and 7 Applications

The following codes are used in Chapters 4, 5 and 7:

D	Domestic
I	International

The first indicator stated in the format applies to the Board Point and the second indicator (preceded by a slash) to the Off Point. Both indicators have to be used in order to avoid ambiguity.

Example 1:

Flight XY123 operates SYD-HNL-LAX

By default definition, the segments of this flight are defined as follows:

Segment	Board Point Country	Off Point Country	Default Int./ Dom. Status (Board Point)	Default Int./ Dom. Status (Off Point)
SYD-HNL	AU	US	International (I)	International (I)
SYD-LAX	AU	US	International (I)	International (I)
HNL-LAX	US	US	Domestic (D)	Domestic (D)

However, passengers travelling SYD-LAX may either clear immigration procedures in HNL arriving in LAX as “Domestic” passengers or remain in transit at HNL as International Passengers.

(a) Immigration clearance at first entry point (HNL)

All SYD-LAX passengers clear immigration at HNL travelling onwards HNL-LAX as Domestic Passengers:

Segment	Board Point Country	Off Point Country	Default Int./ Dom. Status (Board Point)	Default Int./ Dom. Status (Off Point)
SYD-HNL	AU	US	International (I)	International (I)
SYD-LAX	AU	US	International (I)	**Domestic (D)**
HNL-LAX	US	US	Domestic (D)	Domestic (D)

Use DEI 220 to uniquely define the MCT Status for SYD-LAX passengers:

```
SYDLAX 220/I/D
```

(b) Progressive immigration clearance (passengers clear immigration at each Off Point—HNL or LAX)

SYD-LAX passengers remain in transit at HNL, requiring HNL-LAX Domestic passengers to adhere to International MCT status on arrival at LAX:

Segment	Board Point Country	Off Point Country	Default Int./ Dom. Status (Board Point)	Default Int./ Dom. Status (Off Point)
SYD-HNL	AU	US	International (I)	International (I)
SYD-LAX	AU	US	International (I)	International (I)
HNL-LAX	US	US	Domestic (D)	**International (I)**

Use DEI 220 to uniquely define the MCT Status for HNL-LAX passengers:

```
HNLLAX 220/D/I
```

Example 2:

Flight CD789 operates JER-LGW

JER and LGW have the same ISO Country code, meaning that, by default definition, the segment JER-LGW is Domestic at both Board (JER) and Off (LGW) Points.

However, passengers travelling JER-LGW are required to clear customs procedures at LGW, arriving as “International” passengers.

The Minimum Connecting Time International/Domestic Status Override is used to uniquely define that the departure from JER (the Board Point) is Domestic for MCT application, and the arrival at LGW (the Off Point) is International for MCT application, on this particular flight routing:

```
JERLGW 220/D/I
```

Example 3:

Flight EF135 operates LHR-DUB

LHR and DUB have different ISO Country codes, meaning that, by default definition, the segment LHR-DUB is International at both Board (LHR) and Off (DUB) Points.

However, passengers travelling LHR-DUB are not required to clear customs or immigration procedures at DUB, departing LHR and arriving DUB as “Domestic” passengers.

The Minimum Connecting Time International/Domestic Status Override is used to uniquely define that the departure from LHR (the Board Point) is Domestic for MCT application, and the arrival at DUB (the Off Point) is Domestic for MCT application, on this particular flight routing:

```
LHRDUB 220/D/D
```

Example 4:

Flight AB456 operates YVR-YYC-LHR

YVR and YYC have the same ISO Country code, meaning that, by default definition, the segment YVR-YYC is Domestic at both Board (YVR) and Off (YYC) Points.

However, if a Traffic Restriction is applied which does not allow local traffic, but may allow connecting or stopover traffic, to be carried on the YVR-YYC segment, it may be necessary to treat the segment as “International” for MCT application.

The Minimum Connecting Time International/Domestic Status Override is used to uniquely define that the departure from YVR (the Board Point) for passengers travelling to YYC is International for MCT application, and the arrival at YYC (the Off Point) for passengers who have travelled from YVR is International for MCT application, on this particular flight routing:

```
YVRYYC 220/I/I
```

NEXT STATION DEI – – –

The next station on the routing		
Application	**Format**	**Example**
Chapter 6	aaa	PER

Use

The next station on the routing is the station after the one to which the Schedules Clearance Request/Reply, Scheduled Movement Advice or Schedule Information Request/Reply is applicable.

Values

Refer to IATA 3 letter Location Identifiers

NUMBER OF SEASONS DEI – – –

The number of Seasons that have been included in the data set		
Application	**Format**	**Example**
Chapter 7	n	2

Format

A one byte optional field in Record Type 1

NUMBER OF SEATS DEI – – –

The total number of seats on the aircraft (all compartments combined)		
Application	**Format**	**Example**
Chapter 6	nnn	092

Use

If a cargo flight, then zero should be specified.

If transit or turnaround change from cargo to passenger flight, then the number of seats fitted should be specified.

Chapter 6 Application

The field is right justified, zero filled to 3 characters.

OFF POINT INDICATOR DEI – – –

A single alpha character to indicate the arrival station of a segment (Off Point) to which a data element associated with a Data Element Identifier applies		
Application	**Format**	**Example**
Chapter 7	a	C

Values

A single byte field where the arrival station (off point) on the first leg of a flight is indicated by “B”; the arrival station on the second leg is indicated by “C” and so on.

```
3 SQ 0010101J20AUG0828AUG081234  SFO01200120-0700    HKG06300630+08001
4 SQ 0010101J    AB010SFOHKGAI 8001 /US 5402
4 SQ 0010101J    AB106SFOHKGFPACZJDYSEBMWHQNVTLKG
4 SQ 0010101J    AB109SFOHKGM M M M M M M M M M M M M M M M M M M M M
4 SQ 0010101J    AB503SFOHKG 9
4 SQ 0010101J    AB505SFOHKGET
3 SQ 0010102J21AUG0829AUG08 2345  HKG08000800+08001  SIN11401140+0800
4 SQ 0010102J    BC010HKGSINAI 8001 /US 5402
4 SQ 0010102J    BC106HKGSINFPACZJDYSBEMWQNTVHLKG
4 SQ 0010102J    BC109HKGSINM M M M M M M M M M M M M M M M M M M M M
4 SQ 0010102J    BC503HKGSIN 9
4 SQ 0010102J    BC505HKGSINET
```

ON-TIME PERFORMANCE INDICATOR DEI 501

Indication of the on-time performance codes for nonstop segments of a flight itinerary		
Application	**Format**	**Example**
See Below	See Below	See Below

Use

It is not necessary to provide on-time performance codes for multi-stop segments since the code can be obtained from the last nonstop segment within the multi-stop segment.

Formats for On-Time Performance Indicators

Months and years indicated in the four data formats below relate to the month and year from which the on-time performance data has been calculated.

Format 1: 10 Percent Accuracy

Application	Format	Example
Chapters 4,5	naaann	9DEC01
Chapter 7	nØaaann	9ØJAN01

Chapters 4, 5 and 7 Format

Format consists of a numeric in the range 0 through 9 followed by the month and year.

Values for 0 through 9 are:

0	On-time performance 0–9 percent
1	On-time performance 10–19 percent
– – –	
8	On-time performance 80–89 percent
9	on-time performance 90–100

Format 2: 1 Percent Accuracy

Application	Format	Example
Chapters 4,5,7	nnaaann	95DEC01

Chapters 4, 5 and 7 Format

Format consists of two numerics in the range 00 through 99 followed by the month and year.

Values for 00 through 99 are:

00	On-time performance 0 percent
01	On-time performance 1 percent
– – –	
98	On-time performance 98 percent
99	On-time performance 99–100 percent

Format 3: No Historic Information

Application	Format	Example
Chapters 4,5	Naaann	NDEC01
Chapter 7	NØaaann	NØJAN01

Chapters 4, 5 and 7 Format

The first character is **"N"** (indicating that no on-time performance information is applicable to this segment), followed by the month and year.

Format 4: Undetermined

Application	Format	Example
Chapters 4,5	Uaaann	UDEC01
Chapter 7	UØaaann	UØDEC01

Chapters 4, 5 and 7 Format

The first character is **"U"** (indicating that no on-time performance information is required for this segment because the flight is scheduled to operate three times or less during a month), followed by the month and year.

ON–TIME PERFORMANCE INDICATOR FOR DELAYS & CANCELLATIONS DEI 502

Indication of on-time performance codes for non-stop segments for delays and cancellations		
Application	**Format**	**Example**
Chapters 4,5	xxx/xxx/a/xxx/mmmyy	091/021/N/008/JAN10
Chapter 7	xxx/xxx/a/xxx/Ømmmyy	091/021/N/008/ JAN10

Use

It is not necessary to provide on-time performance codes for multi-stop segments since the code can be obtained from the last nonstop segment within the multi-stop segment.

Format Example of Values

091	the percentage of arrivals that were on-time, within 15 minutes of scheduled arrival (currently submitted in DEI 501) NNN is submitted when no values are calculated
021	the percentage of arrivals that were more than 30 minutes late NNN is submitted when no values are calculated
N	indication if the flight was late more than 30 minutes of scheduled arrival more than 50% of the time: N = no highlighting required: delays of 30 minutes or more occurred less than 50% of flight Y = highlighting required: Delays of 30 minutes or more occurred for more than 50% of flights
008	the percentage of cancellations, if 5% or more of the flight's operation were cancelled NNN is submitted when no values are calculated
JAN10	MMMYY with a leading space of the applicable month of the data (leading space applies to SSIM Chapter 7 only)

Chapter 4 and 5 Example

```
SSM
LT
25MAY00144E003/REF 123/449
NEW XASM
HA001
14FEB 13MAR 12345/W2
J 763 FAYBMQNVWLSTGKUER .F6Y60
LAX 0835 HNL1215
LAXHNL 10/KE7852
LAXHNL 501/1JAN10
LAXHNL 502/091/021/N/002/JAN10
```

Chapter 7 Example

```
3 HA    10101J14FEB1013MAR101234567  LAX08350835-08002  HNL12151215-1000Z  763
4 HA    10101J              AB010LAXHNLKE  7852
4 HA    10101J              AB109LAXHNLL L L L L L L L L L L L L
4 HA    10101J              AB505LAXHNLET
4 HA    10101J              AB501LAXHNL1  JAN10
4 HA    10101J              AB502LAXHNL091/021/N/002/ JAN10
```

ONWARD FLIGHT DEI 6

The Flight Designator for the next leg operated by the same aircraft		
Application	**Format**	**Example**
Chapter 4	xx(a)nnn(n)(a)(/n)	AY652
Chapter 5	xx(a)nnn(n)(a) (/nn(aaa(nn)))	AY652/15
Chapter 7	xx(a)(n)(n)(n)n(n)(a)	KLƀ01232Z
DEI 6 is only applicable to Chapters 4 and 5		

Chapters 4, 5 and 7 Applications

Used to indicate the Flight Designator of the next leg operated by the same aircraft where different from the leg being stated.

The Onward Flight is thus used to express the rotation (next use) of the aircraft operating the leg being stated, e.g. return flight or next flight.

The Onward Flight consists of:

(a) Data Element Identifier, always the digit 6 (not applicable in Chap 7);

(b) The Flight Designator for the aircraft when departing;

(c)

(i) Operational Suffix and Aircraft Rotation Layover (Chap 4);

(ii) Operational Suffix and Flight Identifier Date (Chap 5);

(iii) Aircraft Rotation Layover and Operational Suffix (Chap 7).

Note: *When there is a date variation between the arrival and departure of the onward flight, the Date Variation is added to this element for Chapter 4 applications.*

The Flight Identifier Date is added for Chapter 5 applications.

OPERATING AIRLINE DISCLOSURE DEI 127

To state the operator of the flight in a code share, shared airline designation or wet lease situation

Application	Condition	Format	Example
Chapters 4,5	*Airline Designator*	xx(a)	BA or AAL
	Airline Designator and Name	xx(a)/x(x)...	BA/BRITISH AIRWAYS or CPB/CORPORATE EXPRESS AIRLINES
	Name–text only	/x(x)...	/LOGANAIR /BRIT AIR DBA AIR FRANCE /SUN-AIR OF SCANDINAVIA FOR BRITISH AIRWAYS /CL FOR LH
Chapter 7	*Airline Designator*	xx(a)	BA or AAL
	Airline Designator and Name	xx(a)/x(x)...	BA/BRITISH AIRWAYS CPB/CORPORATE EXPRESS AIRLINES
	Name–text only	/x(x)...	/LOGANAIR /BRIT AIR DBA AIR FRANCE /SUN-AIR OF SCANDINAVIA FOR BRITISH AIRWAYS /CL FOR LH

→ For further guidance, refer to Appendix H: Commercial Agreements between two or more airlines

Use

Information that states the actual operator of the flight, when the operator is different from both the Administrating Carrier and the Aircraft Owner. The use of this data element is mandatory when there is a legal requirement to disclose the operator of a service.

If the operator of the service has its own Airline Designator, it is expected that this code is submitted and must be specified in the first two or three bytes of the data element.

If the operator has no airline designator (or chooses not to use it) then the full company name, or other additional text required for marketing purposes will be supplied as free text.

When a Designator is not supplied in the first 3 bytes the data element will start with a slash (/) followed by the operating airline's name or other relevant text.

If the operator supplies both a code and additional text to its company name, the additional text is specified after the Airline Designator with the designator and text separated by a slash (/).

When there is a requirement to disclose an Airline name **and** a corporate (or network) name, it is recommended that the form **"AIRLINE X DBA ABC EXPRESS"** be used where **'DBA'** means 'doing business as'.

When both Code Share and Wet Lease conditions exist on the same flight, and there is a requirement to disclose both Airlines, it is recommended that the form **"AIRLINE ABC FOR AIRLINE XYZ"** be used.

AIRLINE ABC is the airline providing the aircraft and crew and is actually operating the flight (the Wet Lease Carrier).

AIRLINE XYZ is the administrating (airline) in a Code Share arrangement.

Chapters 4 and 5 Applications

DEI 127 is required when the letter **"X"** is specified in Data Element Identifier 2 (Operating Airline Disclosure–Code Share) or in Data Element Identifier 9 (Operating Airline Disclosure–Shared Airline or Wet Lease Designation.

Note: *For Chapters 4 & 5 the technical specifications require that a slash (/) be used between the Data Element Identifier number and the commencement of the plain text data element content. In situations where the data element content itself also requires commencement with a slash (/) then two slashes (//) are required. For example, in the case of* ***GVAFRA 127//ABC AIRWAYS INC*** *the first slash is required by the message technical specification and the second is required as the commencement of the plain text data element content because ABC AIRWAYS INC is a plain text name and not an Airline Designator code.*

Chapter 7 Application

DEI 127 is used when either 'X' or 'Z' has been specified in byte 149 to indicate the following conditions exist:

'X' Operating Airline Disclosure–Shared Airline or Wet Lease Designation

'Z' Operating Airline Disclosure–Code Share

When specifying either a full company name or multiple names, users should be aware that some computer systems have limitations on the number of characters that can be stored and/or displayed.

As such, specifications of more than 35 characters may be truncated.

Note 1: *The carrier code is for use when applications cannot store data larger than airline code—such as the "dual" display in City Pair Availability, where free text cannot be accommodated.*

Therefore, in City Pair Availability, a CRS could display the following:

UA/ZW

Note 2: *Free text following the slash is provided for applications capable of displaying free text—such as invoicing and PNR data, where the 2/3 character limitation does not exist. Therefore, on an invoice, for example, it would read:*

OPERATED BY AIR WISCONSIN DBA UNITED EXPRESS

Examples of data that can be supplied in the formats for DEI 127

For chapter 4/5/7 as there are several potential options to display airline designators or airline designators and name, the following examples of data formats could then be supplied.

	Chapter 7	Chapter 4/5
Airline Designator	AB127**AAABBBBA** AB127**AAABBBBAF**	AAABBB 127/**BA** AAABBB 127/**BAF**
Airline Designator and Name	AB127**AAABBBBA /BRITISH AIRWAYS** AB127**AAABBB2H /THALYS INTERNATIONAL** AB127**AAABBBCPB/CORPORATE EXPRESS AIRLINES**	AAABBB 127/**BA/BRITISH AIRWAYS** AAABBB 127/**2H/THALYS INTERNATIONAL** AAABBB 127/**CPB/CORPORATE EXPRESS AIRLINES**
Name—text only	AB127AAABBB/**LOGANAIR** AB127AAABBB/**SUN-AIR OF SCANDINAVIA FOR BRITISH AIRWAYS** AB127AAABBB/**BRIT AIR DBA AIR FRANCE**	AAABBB 127//**LOGANAIR** AAABBB 127//**SUN-AIR OF SCANDINAVIA FOR BRITISH AIRWAYS** AAABBB 127//**BRIT AIR DBA AIR FRANCE**

OPERATING AIRLINE DISCLOSURE—CODE SHARE DEI 2

To state the carrier actually operating a flight, or flight leg(s) in a commercial duplicate code share operation		
Application	**Format**	**Example**
Chapters 4,5	xx(a)	AB or 3B or 6X or AGL
	X	X
Chapter 7	a	L
DEI 2 is only applicable to Chapters 4 and 5		

→ For further guidance and examples when a combination of Code Share/Wet Lease agreements is in place refer to Appendix H: Commercial Agreements between two or more airlines.

Use

Information supplied on a flight that will give details of the Carrier who is operating a flight/flight legs.

When the carrier in the Flight Designator has sold seats on its flight/flight legs that are also distributed under a non-operational carrier code, the non-operational carrier should provide details of the operating carrier using DEI 2.

The use of this Data Element is mandatory when there is a legal requirement to disclose the Actual Operator of a flight, and the operator is different from both the Administrating Carrier and the Aircraft Owner.

Use of this data element is as important for operational functions as it is for commercial functions.

Chapters 4 and 5 Applications

Code Share details consist of The Data Element Identifier 2 followed by either:

The Airline Designator specifying the operator

or

The letter **"X"**. **'X'** indicates that the carrier has no Airline Designator (or chooses not to use it). The full company name or other additional text required for marketing or disclosure purposes, is specified using Data Element Identifier 127 (Operating Airline Disclosure).

Refer to Operating Airline Disclosure DEI 127 for the full formats.

Chapter 7 Application

Code Share details are supplied in the record type 3 by supplying a letter 'L' or 'Z' in byte 149.

'L' indicates the operator is the Airline Designator specified in the Aircraft Owner field byte 129–131.

'Z' indicates that the carrier has no Airline Designator (or chooses not to use it). The full company name, or other additional text required for marketing or disclosure purposes, is specified using Data Element Identifier 127 (Operating Airline Disclosure).

Refer to Operating Airline Disclosure DEI 127 for the full formats.

Example 1: Airline Designator supplied with DEI 2

```
SSM
LT
24MAY00144E003/REF 123/449
NEW XASM
AZ544 2/AF
12AUG 30SEP 1234567/W2
G M80 FCYML/FNCN.FCM 3/AF
GVA1830/0/1815 FRA1945/0/1955 7/FDC/CD/YS/MS/LS
GVAFRA 8/Z/173/A
GVAFRA 50/AF836
```

Example 2: Text supplied with DEI 2

```
SSM
LT
25MAY00144E003/REF 123/449
NEW XASM
US7192 2/X
04JUN 02JUL 12345/W2
J CR7 FAYBMQNVWLSTGKUER .F6Y60 3/X
DEN1459 PDX1636
DENPDX 50/UA7192
DENPDX 113/SKYWEST AIRLINES
DENPDX 127//SKYWEST AIRLINES DBA UNITED EXPRESS
```

```
SSM
LT
14MAY23985E001
RPL
FI055
28MAY09 30JUN09 5
J J31 YBHKMLVTSNQOG.Y999 3/X
OSL1855 AAL2005 2/X 7//M
AAL2025 AAR2045 2/X 7//M
OSLAAL 8/G
OSLAAL 50/BA8280
OSLAAL 113/SUN-AIR OF SCANDINAVIA
OSLAAL 127//SUN-AIR OF SCANDINAVIA FOR BRITISH AIRWAYS
OSLAAL 503/9
OSLAAL 505/ET
AALAAR 8/A
AALAAR 50/BA8280
AALAAR 113/SUN-AIR OF SCANDINAVIA
AALAAR 127//SUN-AIR OF SCANDINAVIA FOR BRITISH AIRWAYS
AALAAR 503/9
OSLAAR 8/G
```

```
SSM
LT
25MAY00144E003/REF 123/449
NEW XASM
SK3205 2/X
04JUN 02JUL 12345/W2
J CR7 FAYBMQNVWLSTGKUER .F6Y60 3/EW
FRA0930 DRS1030
FRADRS 50/LH1052
FRADRS 127//EW FOR LH
```

Example 3: Airline Designator and *additional* text to carriers registered name has been supplied

```
SSM
LT
14MAY36714E001
RPL
UA002
25AUG09 25SEP09 6
J SF3 JCRIYBHKMLVSNQOG.C32 3/X
SYY1930 GLA2030 2/X
SYYGLA 50/US2830
SYYGLA 98/M
SYYGLA 505/ET
SYYGLA 503/9
SYYGLA 113/US AIRWAYS EXPRESS-PSA AIRLINES
SYYGLA 127/US/US AIRWAYS EXPRESS-PSA AIRLINES
```

SSIM details	Byte 129–131	Byte 149
3 SK 30020101J27JUN0922AUG09 6 1BGO15551555+0200 EDI16401640+0100 4 SK 30020101J AB050BGOEDIQF 202 4 SK 30020101J AB109BGOEDIGPGPGPGPGPGPGPGPGPGPGPGPGPGPGPGPGPGP 4 SK 30020101J AB503BGOEDI 9	QF	L
3 KL 37610101J13MAY0921JUN091234567 JNB08250825+0200B CPT10351035+0200 4 KL 37610101J AB050JNBCPTBA 6411 4 KL 37610101J AB109JNBCPTM M M M M M M M M M M M M 4 KL 37610101J AB113JNBCPTCOMAIR 4 KL 37610101J AB127JNBCPT/COMAIR - BA FRANCHISE 4 KL 37610101J AB505JNBCPTET	X	Z
3 SK 32050701J31MAY0931MAY09 71FRA09300930+02001 DRS10301030+0200 4 SK 32050701J AB050FRADRSLH 1052 4 SK 32050701J AB109FRADRSS S S S R R R R R R R R R R R R 4 SK 32050701J AB127FRADRS/EW FOR LH 4 SK 32050701J AB503FRADRS 9	EW	Z
3 UA 28300101J14MAY0901JUN0912345 7 CLT11251125-0400 OAJ12201220-0400 4 UA 28300101J AB011CLTOAJ*A 4 UA 28300101J AB050CLTOAJUS 2346 4 UA 28300101J AB113CLTOAJUS AIRWAYS EXPRESS-PSA AIRLINES 4 UA 28300101J AB127CLTOAJUS/US AIRWAYS EXPRESS-PSA AIRLINES 4 UA 28300101J AB299CLTOAJ/US AIRWAYS 4 UA 28300101J AB505CLTOAJET	X	Z

OPERATING AIRLINE DISCLOSURE—SHARED AIRLINE or WET LEASE DESIGNATION DEI 9

To state the carrier actually operating a flight, or flight legs on behalf of the Carrier specified by the Airline Designator in the Flight Designator		
Application	**Format**	**Example**
Chapters 4,5	xx(a)	AB or 3B or 6X or AGL
	X	9/X
Chapter 7	a	S
DEI 9 is only applicable to Chapters 4 and 5		

→ *For further guidance and examples when a combination of Code Share/Wet Lease agreements is in place refer to Appendix H: Commercial Agreements between two or more airlines*

Information supplied on a flight/flight leg providing details of the carrier who is operating the flight/flight leg on behalf of the carrier in the flight designator.

Note: *DEI 9 Operating Airline Disclosure–Shared Airline or Wet Lease Designation is not to be used in situations where all parties in a code share agreement require their individual flights to be distributed/displayed. Refer to DEI 2 Operating Airline Disclosure–Code Share for the correct usage in this situation.*

The use of this data element is mandatory when there is a legal requirement to disclose the Actual Operator of the flight, and this is different from both the Administrating Carrier and the Aircraft Owner.

Use of this data element is as important for operational functions as it is for commercial functions.

Chapters 4 and 5 Applications

Shared Airline Designation (Code Share/Wet Lease) consist of Data Element Identifier 9 followed by either:

The Airline Designator specifying the code of the operator

or

The letter **'X'**. **'X'** indicates that the carrier has no Airline Designator (or chooses not to use it). The full company name, or other text required for marketing or disclosure purposes, is specified using Data Element Identifier 127 (Operating Airline Disclosure).

Chapter 7 Application

Code Share details are supplied in the record type 3 by supplying a letter **'S'** or **'X'** in byte 149:

'S' indicates the operator is the Airline Designator specified in the Aircraft Owner field byte 129–131

'X' indicates the that the carrier has no Airline Designator (or chooses not to use it). The full company name, or other additional text required for marketing or disclosure purposes, is specified using Data Element Identifier 127 (Operating Airline Disclosure).

Refer to Operating Airline Disclosure DEI 127 for the full formats

Example 1: Airline Designator supplied with DEI 9

```
SSM
LT
24MAY00144E003/REF 123/449
NEW XASM
LX544 9/AF
12AUG 30SEP 1234567/W2
G M80 FCYML/FNCN.FCM 3/AF
GVA1830/0/1815 FRA1945/0/1955 7/FDC/CD/YS/MS/LS
GVAFRA 8/Z/173/A
```

Example 2: Text supplied with DEI 9

```
SSM
LT
15MAY00982E001
RPL XASM
LX1617 9/X
25MAY09 26MAY09 12
J AR1 CDZJYBMHUGQKVLWTE.CYVVAR1S97 3/X
MXP1055 ZRH1200 7/CM/DM/ZM/JM//R
MXPZRH 10/LH5194
MXPZRH 99/1
MXPZRH 113/SWISS EUROPEAN AIR LINES
MXPZRH 127//SWISS EUROPEAN AIR LINES
MXPZRH 503/9
MXPZRH 505/ET
```

```
SSM
LT
14MAY23985E001
RPL
SK005
28MAY09 30JUN09 5
J J31 YBHKMLVTSNQOG.Y999 3/X
OSL1855 AAL2005 9/X 7//M
AAL2025 AAR2045 9/X 7//M
OSLAAL 8/G
OSLAAL 113/SUN-AIR OF SCANDINAVIA
OSLAAL 127//SUN-AIR OF SCANDINAVIA
OSLAAL 503/9
OSLAAL 505/ET
AALAAR 113/SUN-AIR OF SCANDINAVIA
AALAAR 127//SUN-AIR OF SCANDINAVIA
AALAAR 505/ET
AALAAR 503/9
OSLAAR 8/G
```

Example 3: Airline Designator and *additional* text to carriers registered name has been supplied

```
SSM
LT
14MAY36714E001
RPL
US002
25AUG09 25SEP09 6
J SF3 JCRIYBHKMLVSNQOG.C32 3/X
DEN1930 ORD2030 9/X
DENORD 98/1
DENORD 113/US AIRWAYS EXPRESS-PSA AIRLINES
DENORD 127/US/US AIRWAYS EXPRESS-PSA AIRLINES
DENORD 505/ET
DENORD 503/9
```

SSIM details	Byte 129–131	Byte 149
3 SK 2040101J 11MAY0911MAY091 1KRS06200620+0200 OSL07100710+0200 4 SK 2040101J AB109KRSOSLK K K K K K K K K K K K K K 4 SK 2040101J AB503KRSOSL 9	BU	S
3 UA 56620101J04JUN0901SEP0912345 ORD10261026-05002 SDF12501250-0400 4 UA 56620101J AB011ORDSDF*A 4 UA 56620101J AB127ORDSDF/UNITED EXPRESS/EXPRESSJET AIRLINES 4 UA 56620101J AB299ORDSDF/UNITED AIRLINES TERM 1 4 UA 56620101J AB505ORDSDFET 4 UA 56620101J AC011ORDORD*A	XE	X
3 UA 28300101J14MAY0901JUN0912345 7 CLT11251125-0400 OAJ12201220-0400 4 UA 28300101J AB011CLTOAJ*A 4 UA 28300101J AB113CLTOAJUS AIRWAYS EXPRESS-PSA AIRLINES 4 UA 28300101J AB127CLTOAJUS/US AIRWAYS EXPRESS-PSA AIRLINES 4 UA 28300101J AB299CLTOAJ/US AIRWAYS 4 UA 28300101J AB505CLTOAJET	X	X

OPERATIONAL SUFFIX DEI – – –

A code assigned by the administrating carrier for operational purposes		
Application	**Format**	**Example**
Chapters 4,5,6,7	a	B

→ *For further guidance, refer to Appendix H: Time Mode*

→ *For further examples, refer to Itinerary Variation*

Format

An optional one alphabetic character that immediately follows the Flight Number.

The use and meaning of the suffix will be defined by the Administrating Carrier.

Use

When supplying Operational Suffix details for multi-leg flights, the suffix will apply to all legs of the itinerary.

It is recommended that Suffix Z be reserved for use in connection with UTC day/date Flight Designator duplications.

Suffix Z may be used regardless of whether the Time Mode used in a data transmission is UTC or Local. If data is transmitted in Local Time, but the receiving system needs to convert it to UTC, the lack of Suffix Z where UTC day/date duplications occur may cause problems.

The appropriate IATA/A4A Resolutions covering the reservations area specify that Flight Numbers should only be numeric and thus not contain any alpha characters.

For this reason, the Operational Suffix must not be considered as part of the Flight Number for publication and reservations purposes as some computer systems will be unable to read it.

Note: *Based on this recommendation it is common practice in the Industry to program for suffix Z to be used for UTC day/date duplications. Receiving systems may not be able to read other alpha characters and the resulting display will be incorrect.*

Chapter 4/5 Application

The operational suffix is specified only once as part of the flight number.

```
SSM
LT
24MAY00144E003/REF 123/449
NEW XASM
LX544A
12AUG 30SEP 1234567
G M80 FCMYL
GVA1830 FRA1945 7FDC/CD/YS/MS/LS
FRA2045 HAM 2130
GVAFRA 8/Z/173/A
GVAFRA 10/LX836
```

Chapter 7 Application

The Operational Suffix is specified byte 2 of Record Types 3 and 4.

```
3SAA 0010101J01MAR0229MAR0212345 7 LHR10301030+0000 JFK17301730-0500 777
3SAA 0010102J01MAR0229MAR0212345 7 JFK18451845-0500 LAX23452345-0800 777
```

ORIGIN STATION DEI – – –

The airport of origin of the aircraft with the same arrival Flight Designator		
Application	**Format**	**Example**
Chapter 6	aaa	LHR

Use

This field is mandatory when Origin Station is different from Previous Station.

Values

Refer to the IATA 3-lettter Location Identifiers.

OVERMIDNIGHT INDICATOR DEI – – –

Indication that the aircraft transit/turnaround occurs over midnight		
Application	**Format**	**Example**
Chapter 6	(n)	1

Use

“night” is defined as **over midnight**.

Overmidnight Indicators greater than the value 9 are not allowed.

Values

Code	Description
→	No nightstop (in message formats, the blank will not be transmitted)
1	1 night
2	2 nights
3	3 nights
4	4 nights
5	5 nights
6	6 nights
7	7 nights
8	8 nights
9	9 nights

PARTNERSHIP SPECIFICATION DEI 11

Indication that a flight segment is being marketed as part of a partnership or alliance with one or more carriers

Application	Format	Example
Chapters 4,5	xx(x)... (max. 35 characters)	UFO
Chapter 7	xx(x)... (max. 35 characters)	ABCDEFGHI

Use

The purpose of this data element is to indicate to reservations systems and airline guides which flight segments are performed under a partnership/alliance arrangement for display purposes.

“Onliance” Connections are connections between flights of different airline designators that share the same Partnership Specification on all flights from origin to final destination.

The “Onliance” connection is considered an interline connection for the application of Minimum Connecting Time and Traffic Restrictions.

The “Onliance” connection is considered an online connection for display sequencing where an online preference is given.

In the case of multi-leg flights, no assumption can be made about multi leg segments.

For example, routing AAA-BBB-CCC might have “Alliance XXX” specified on legs AAA-BBB and BBB-CCC. No assumption can be made about Partnership Specification on segment AAA-CCC.

In cases where a flight segment may need to be identified as participating in more than one partnership/alliance, multiple specification of Data Element Identifier 11 items may be filed.

Chapters 4, 5 and 7 Applications

Segment information lines (Chapters 4 and 5) and Segment Data Records (Chapter 7) pertaining to Data Element Identifier 11 shall be kept as one group.

Updated transmissions of the same flight or flight segment(s) replace the complete previous set of lines/records irrespective of the number of lines/records transmitted.

The characters will be translated by the receiving body through bilateral agreements.

PASSENGER CHECK-IN DEI 299

The Airline or agency counter where a passenger should go to check-in for a flight			
Application	**Condition**	**Format**	**Example**
Chapters 4,5	*Airline Designator*	xx(a)	AB or ABC
	Airline Designator and Text description	xx(a)/x(x)...	AB/COUNTER 61
	Text Description only	/x(x)...	/HALL B
Chapter 7	*Airline Designator*	xx(a)	ABØ/ or ABC
	Airline Designator and Text description	xx(a)/x(x)...	ABØ/COUNTER 61
	Text Description only	/x(x)...	/HALL B

Use

A station oriented data element that is used on a flight leg, the Board Point of the stated leg being the station for which Passenger Check-In information is being provided.

If the Airline or agency being specified has its own Airline Designator, it must be specified in the first 2 or 3 bytes of the data element.

Otherwise, the data element must start with a slash (/) followed by the Airline or agency's incorporated/registered name in plain text, or any other plain text pertaining to where a passenger should go to Check-in.

If the Airline or agency being specified wants to provide additional text to its incorporated/registered name, it can be specified in plain text after the Airline Designator and separated by a slash (/).

The maximum number of characters allowed in this Data Element is 35, excluding any slashes (/).

When specified, the Airline Designator is for use when applications cannot store data larger than the 2 or 3 character designator codes, where free text cannot be accommodated.

Free text following the slash is provided for applications capable of displaying free text, where the 2 or 3 character limitation does not exist.

In the absence of Passenger Check-In information, no default can be assumed.

Note: *For Chapters 4 & 5 the technical specifications require that a slash (/) be used between the Data Element Identifier number and the commencement of the plain text data element content. In situations where the data element content itself also requires commencement with a slash (/) then two slashes (//) are required. For example, in the case of* ***GVAFRA 299//HALL B*** *the first slash is required by the message technical specification and the second is required as the commencement of the plain text data element content because HALL B is a plain text description of where a passenger should go to Check-in and not an Airline Designator code.*

PASSENGER RESERVATIONS BOOKING DESIGNATOR (PRBD) DEI – – –

The Passenger Reservations Booking Designator is a leg oriented (see Note 4) data element specifying the codes to describe the reservations classes provided, and optionally the number of seats allocated for each class or group of classes		
Application	**Format**	**Example**
Chapters 3,4,5	a(x)(x)(x)	PFCYBV
Chapter 7	a(x)(x)(x) .... (20 char.)	F008C038BQV145ØØØØØØ

→ *For further guidance, refer to Appendix H: Aircraft Seating Description*

Use

Used for publication, reservations and other public information purposes, and may differ from the physical aircraft layout that may be defined in the Aircraft Configuration/Version.

Chapters 3, 4, 5 and 7 Applications

A string of characters consisting of a series of single alphabetic codes from those listed in the Aircraft Configuration/Version table and/or AIRIMP Section 7.1.1.

Optionally, all codes may be followed by a numeric value to indicate the number of seats for each code.

The numeric value may also relate to a group of codes to specify the combined number of seats for each group of codes, but this facility may not be used unless the Aircraft Configuration/Version data element has also been stated.

The codes can be stated in any sequence. Receiving systems unable to process all codes specified in this data element will normally process their maximum number in the order presented.

Some receiving systems are unable to introduce new reservations classes by using Data Element Identifier 101 (Passenger Reservations Booking Designator Segment Override), unless they are stated in the Passenger Reservations Booking Designator.

Note 1: *While specification of the number of seats is optional, when a value is quoted the total seats must equal the saleable seating capacity of the aircraft*.

Note 2: *When it is not possible to express the Passenger Reservations Booking Designator within the available field (maximum line length in Chapters 4 and 5 or 20 characters in Chapter 7),* ***"XX"*** *will be stated in the first two positions*.

For Chapter 7 purposes only, the third through twentieth positions will be blank to indicate that reference should be made to Data Element Identifier 106 (Passenger Reservations Booking Designator Exceeding Maximum Length) for full Passenger Reservations Booking Designator specification.

In Chapters 4 and 5 applications, this shall also apply when the combined full formats of the following data elements result in an Equipment Data line overflow:

- *Passenger Reservations Booking Designator (PRBD)*
- *Passenger Reservations Booking Modifier (PRBM)*
- *Aircraft Configuration/Version (ACV)*
- *The first conditional or optional Data Element:*

  Operating Airline disclosure—Code Share,

  Aircraft Owner,

  Cockpit Crew Employer,

  Cabin Crew Employer,

  Onward Flight

  or

  Operating Airline Disclosure—Shared Airline or Wet Lease Designation

Note 3: *Each numeric specification must not exceed three digits*.

Leading zeros may optionally be used.

Note 4: *For segments where all of the reservations classes are not identical on each of the legs making up the segment, those reservations classes applicable to the segment should, for reasons of clarity, be stated using the Data Element Identifier 101 (Passenger Reservations Booking Designator Segment Override)*.

→ Refer also to the Note under "Passenger Reservations Booking Modifier" regarding the relationship between Data Element Identifiers 101 and 102 (Passenger Reservations Booking Modifier Segment Override).

Note 5: *In the case of a multi-leg segment where Data Element Identifier 101 has not been used, the Passenger Reservations Booking Designator used on the leg which has the same Board Point as the multi-leg segment is assumed to apply*.

PASSENGER RESERVATIONS BOOKING DESIGNATOR EXCEEDING MAXIMUM LENGTH DEI 106

The complete Passenger Reservations Booking Designator when it is in excess of the maximum length		
Application	**Format**	**Example**
Chapters 4,5,7	a(x)(x)(x)(x)(x)...	F24JCD64WYMBQKLTVH254

Chapters 4 and 5 Applications

A "**NIL**" statement is not required when previous information transmitted about the same flight leg is modified to the extent that Data Element Identifier 106 is not required.

In the absence of Data Element Identifier 106, it is assumed that the complete Passenger Reservations Booking Designator is contained within its dedicated data element.

The maximum line length constraint of 58 characters must be protected.

PASSENGER RESERVATIONS BOOKING DESIGNATOR SEGMENT OVERRIDE DEI 101

Identification by carriers of a Passenger Reservations Booking Designator that applies over a segment		
Application	**Format**	**Example**
Chapters 4,5,7	a(x)(x)(x)(x)(x)(x)...	C64M254

→ *For further guidance, refer to Appendix H: Aircraft Seating Description*

Use

When used, the Data Element overrides the information given in the Passenger Reservations Booking Designator.

Some receiving systems are unable to introduce new reservations classes by using this Data Element, unless they have already been used in the Passenger Reservations Booking Designator.

Chapters 4 and 5 Applications

The maximum message length constraint of 58 characters must be protected for Chapter 4 and 5 applications.

PASSENGER RESERVATIONS BOOKING MODIFIER (PRBM) DEI – – –

A modifying code applicable to the appropriate Passenger Reservations Booking Designator Code		
Application	**Format**	**Example**
Chapters 4,5	aa(aa)(aa).....	FNYN
Chapter 7	(a)(a)(a)(a)(a)	ØNØØØ

→ *For further guidance, refer to Appendix H: Aircraft Seating Description*

Chapters 4 and 5 Applications

The relevant Passenger Reservations Booking Designator Code is stated before the modifier.

When it is not possible to express the Passenger Reservations Booking Modifier within the available line length, **"XX"** will be stated in the first two positions.

This will indicate that reference should be made to Data Element Identifier 107 (Passenger Reservations Booking Modifier Exceeding Maximum Length) for full Passenger Reservations Booking Modifier specification.

This shall also apply when the combined full formats of the following data elements result in an Equipment Data line overflow:

- Passenger Reservations Booking Designator (PRBD)
- Passenger Reservations Booking Modifier (PRBM)
- Aircraft Configuration/Version (ACV)

- The first conditional or optional Data Element:

  Operating Airline Disclosure—Code Share,

  Aircraft Owner,

  Cockpit Crew Employer,

  Cabin Crew Employer,

  Onward Flight

  or

  Operating Airline *Disclosure*—Shared Airline or Wet Lease Designation

Chapter 7 Application

If any Passenger Reservations Booking Designator Code other than the first five are to be modified, **"XX"** will be stated in the first two positions.

This will indicate that reference should be made to Data Element Identifier 107 (Passenger Reservations Booking Modifier Exceeding Maximum Length) for full Passenger Reservations Booking Modifier specification.

The modifier must be a single, non-blank, alphabetic character that is different from the Passenger Reservations Booking Designator Code which it modifies.

The modifier is inserted in the appropriate sequential order (as specified in the Passenger Reservations Booking Designator or Aircraft Configuration/Version, as appropriate) for the leg concerned to indicate that a modifier is applicable.

Non-applicable and non-existent classes are to be blank-filled.

Note: *Modifiers shall apply to multi-leg segments of a flight only when the Passenger Reservations Booking Designator and the Passenger Reservations Booking Modifier are equal on each of the legs making up the segment.*

When classes and/or modifiers are different over a multi-leg segment, the override facility (Data Element Identifiers 101 (Passenger Reservations Booking Designator Segment Override)/102 (Passenger Reservations Booking Modifier Segment Override)) must be used.

The following rules apply when using Data Element Identifier 101 and Data Element Identifier 102 override facility:

(a) *Data Element Identifier 102 is used to display modifier information for multi-leg segments. However, Data Element Identifier 102 must always appear with a corresponding Data Element Identifier 101, even if the classes on all legs making up the segment are equal to the classes in the segment.*

(b) *Data Element Identifier 102 must specify only the Passenger Reservations Booking Designator Codes to be modified and their modifiers.*

"Blanks" in the modifier position are not permitted.

(c) *The presence of only a Data Element 101 indicates that there are no applicable modifiers for the Passenger Reservations Booking Designator.*

(When a Data Element Identifier 101 is used without Data Element Identifier 102, then any Passenger Reservations Booking Modifiers on the legs of that segment do not apply.)

PASSENGER RESERVATIONS BOOKING MODIFIER EXCEEDING MAXIMUM LENGTH DEI 107

The complete Passenger Reservations Booking Modifier when it is in excess of the maximum length available		
Application	**Format**	**Example**
Chapters 4,5	aa(aa)(aa)(aa)(aa)(aa)...	FNCNYNBOHOKO
Chapter 7	(a)(a)(a)(a)(a)(a)...	NØNNOO

Chapters 4 and 5 Applications

The maximum line length constraint of 58 characters must be protected.

A **"NIL"** statement is not required when previous information transmitted about the same flight leg is modified to the extent that Data Element Identifier 107 is not required.

In the absence of Data Element Identifier 107, it is assumed that the complete Passenger Reservations Booking Modifier is contained within its dedicated data element.

PASSENGER RESERVATIONS BOOKING MODIFIER SEGMENT OVERRIDE DEI 102

A modified Passenger Reservations Booking Designator, e.g. night class or off peak, that may not apply leg by leg, but over a segment		
Application	**Format**	**Example**
Chapters 4,5,7	aa(aa)(aa)...	FNYN

→ *For further guidance, refer to Appendix H: Aircraft Seating Description*

Use

When provided by a carrier, the data overrides the information given in the Passenger Reservations Booking Modifier.

PASSENGER TERMINAL DEI – – –

The physical terminal used by a passenger at any airport where more than one terminal exists		
Application	**Format**	**Example**
Chapters 3,7	x(x)	2A

Use

If the terminal used by a flight at an airport included in SSIM Appendix D is not pre-determined, the Passenger Terminal shall be stated as **"0"** (zero).

If the terminal varies by segment, report the terminal that pertains to the departure/arrival leg in the appropriate Passenger Terminal field.

Any terminal information that differs by segment shall be supplied using Data Element Identifiers 198 (Passenger Terminal Segment Override—Arrival) or 199 (Passenger Terminal Segment Override—Departure).

Chapters 3 and 7 Format

A two byte field.

Chapters 4 and 5 Applications

Specification is achieved by using Data Element Identifiers 98 (Passenger Terminal Identifier—Arrival) and 99 (Passenger Terminal Identifier—Departure).

Values

Refer to SSIM Appendix D.

PASSENGER TERMINAL IDENTIFIER—ARRIVAL DEI 98

The passenger arrival terminal		
Application	**Format**	**Example**
Chapters 4,5	x(x)	2W
Chapter 6	TA.x(x)	TA.M
DEI 98 is only applicable to Chapters 4 and 5		

Chapters 4 and 5 Applications

The Passenger Terminal Identifier always refers to the Off Point of the stated leg.

Chapter 6 Application

The Passenger Terminal Identifier—Arrival is always preceded by a blank space, then TA and a full stop/period. It is positioned after the Frequency Rate, or the Service Type if no Frequency Rate applies.

Chapter 6 describes the procedure to be followed when the use of the Passenger Terminal Identifier—Arrival results in the maximum message line length being exceeded.

Values

Refer to SSIM Appendix D.

PASSENGER TERMINAL IDENTIFIER—DEPARTURE DEI 99

The passenger departure terminal		
Application	**Format**	**Example**
Chapters 4,5	x(x)	2W
Chapter 6	TD.x(x)	TD.D
DEI 99 is only applicable to Chapters 4 and 5		

Chapters 4 and 5 Applications

The Passenger Terminal Identifier always refers to the Board Point of the stated leg.

Chapter 6 Application

The Passenger Terminal Identifier—Departure is always preceded by a blank space, then TD and a full stop/period. It is positioned after the Passenger Terminal Identifier—Arrival if used, or the Frequency Rate, or the Service Type if no Frequency Rate applies.

Chapter 6 describes the procedure to be followed when the use of the Passenger Terminal Identifier—Departure results in the maximum message line length being exceeded.

Values

Refer to SSIM Appendix D.

PASSENGER TERMINAL SEGMENT OVERRIDE—ARRIVAL DEI 198

The Passenger Terminal for deplaning passengers that may not apply leg by leg but over a segment		
Application	**Format**	**Example**
Chapters 4,5,7	x(x)	I

Use

Provided by a carrier to advise that deplaning passengers arrive at different terminals (e.g. Domestic, International).

The Passenger Terminal Segment Override always refers to the Off Point of the stated segment.

PASSENGER TERMINAL SEGMENT OVERRIDE—DEPARTURE DEI 199

The Passenger Terminal for enplaning passengers that may not apply leg by leg but over a segment		
Application	**Format**	**Example**
Chapters 4,5,7	x(x)	I

Use

Provided by a carrier when enplaning passengers depart from different terminals (e.g. Domestic, International).

The Passenger Terminal Segment Override always refers to the Board Point of the stated Segment.

PERIOD OF OPERATION DEI – – –

The date limits for the first and last operation of a flight		
Application	**Format**	**Example**
Chapters 3,4	nnaaa(nn)→nnaaa(nn)	01JUN 00XXX
Chapter 6	nnaaannaaa	27APR27SEP
Chapter 7	nnaaannnnaaann	10APR0112MAY01

Use

When used in a context where flights are cancelled and/or deleted, the Period of Operation specifies the period for which the operation is being cancelled.

Applicability of Period of Operation:

Chapters 3,4	Dates refer to departure from origin station
Chapter 6	Dates refer to operation at Clearance/Advice Airport
Chapter 7	Dates refer to departure from leg departure station

Chapters 4 and 7 Applications

The dates always relate to the Scheduled Time of Aircraft Departure (STD)—not the Passenger STD.

Chapter 7 Application

The Period of Operation relates to each leg of the flight.

Consequently, downline legs of a flight having an STD on the next (or previous) day(s) shall have the Period of Operation adjusted correspondingly in relation to the Period of Operation on the first leg.

This adjustment is necessary also in cases where the dates fall outside the applicable Season or Period of Schedule Validity stated in Record Type 2.

For Chapters 4 and 7 applications also refer to **Date Variation**.

Chapter 7 Example:

```
3 XX 12340101J15AUG0828SEP081234567 ATL20002000-0400SLGW09000900+0100S...01
3 XX 12340102J16AUG0629SEP081234567 LGW10301030+0100SFRA13301330+02001...11
3 XX 12340103J16AUG0629SEP081234567 FRA16001600+02001SIN04000400+08001...12
3 YY 110101J28JUN0828AUG081234567 AKL10301030+1200SHNL21152115-1000M...0A
3 YY 110102J27JUN0827AUG081234567 HNL23002300-1000MLAX07000700-07001...A0
```

Other Applications

For ad hoc modifications, inclusive dates are allowed.

Therefore, the start date quoted may be up to six days before the first actual date, and the end date may be up to six days after the last actual date depending on the Day(s) of Operation related to the Period of Operation.

In Chapter 7 the adjustment of dates on downline legs departing on the next (or previous) day must also be applied when using inclusive dates.

The Period of Operation consists of the first date as specified above and the last date as indicated above.

Apart from Chapter 6 application, either date can be stated as **"00XXX00"** (the last two characters being optional in Chapters 3 and 4). In order to maintain a constant Local Time **"00XXX00"** should not be used when a Station in the itinerary observes Daylight Saving Time as the conversion from UTC to LT or LT to UTC will result in incorrect times and, in extreme cases, negative flight times.

When the first date is so specified, the data is effective immediately (in Chapter 7 on the first date in the Period of Schedule Validity applied to the first leg of the itinerary).

When the second date is so specified, it is effective indefinitely (in Chapter 7 until the last date in the Period of Schedule Validity applied to the first leg of the itinerary).

Note 1: *The date shall be expressed as the first two numerics for the date and first three alphabetic characters (in English spelling) for the month and (optionally) two last numerics for the year.*

The year is not quoted for Chapter 6 purposes.

The year may be omitted in Chapters 3 and 4 only if the first and last operations are within 11 months from the current date, or are indefinite.

Note 2: *The Period of Operation must conform to the applicable Time Mode.*

PERIOD OF SCHEDULE VALIDITY DEI – – –

The limits of the Period of Operation of the first leg of each itinerary variation		
Application	**Format**	**Example**
Chapter 7	nnaaannnnaaann	28MAR01300CT01

→ *For further guidance, refer to Appendix H: Daylight Saving Time*

Format

Consists of a first and last date.

The last date can be specified as **"00XXX00"** to indicate that the specified schedule is valid indefinitely.

Note: *The Period of Schedule Validity must conform to the applicable Time Mode.*

PLANE CHANGE WITHOUT AIRCRAFT TYPE CHANGE DEI 210

A plane change but without Aircraft Type change at the board point of the stated segment		
Application	**Format**	**Example**
Chapters 4,5,7	*	*
***The Data Element Identifier implies this condition. No additional data is required.**		

→ *For further guidance, refer to Appendix H: Plane Change without Aircraft type change and Duplicate Flight Legs*

Use

When there is a requirement to deplane and reboard passengers on an aircraft or a legal requirement to disclose Plane Change without an Aircraft Type Change, the use of this data element is mandatory. △

For example: △

- Airlines require an aircraft change enroute to the same aircraft type, ie deplane & reboard a **different** aircraft but of the **same aircraft type**.

  or

- There is a requirement to clear customs and deplane & reboard the **same physical aircraft and type**.

PREVIOUS STATION DEI – – –

The previous station on the routing		
Application	**Format**	**Example**
Chapter 6	aaa	FRA

Use

The previous station on the routing before the station to which the Schedules Clearance Request/ Reply, Scheduled Movement Advice or Schedule Information Request/Reply is applicable.

Values

Refer to IATA 3 letter Location Identifiers

RECORD SERIAL NUMBER DEI – – –

The number of the record in computerized schedule formats		
Application	**Format**	**Example**
Chapter 7	nnnnnn	001049

Format

A 6 byte numeric field occurring in all records on each physical data set irrespective of type and numbered sequentially beginning with **"000001"**.

Use

Enables a check to be made for possible errors and, for records found to be in error, enables them to be unambiguously identified.

When the number of records exceed **"999999"**, it is suggested that the re-numbering starts at **"000002"** since **"000001"** is reserved for Record Type 1.

RECORD TYPE DEI – – –

The type of records in the computerized schedules formats for Chapter 7		
Application	**Format**	**Example**
Chapter 7	n	1

Values

1	Header Record
2	Carrier Record
3	Flight Leg Record
4	Segment Data Record
5	Trailer Record

REJECT REASON DEI – – –

Information provided to advise the sender of an SSM or ASM why the message has not been successfully processed		
Application	**Format**	**Example**
Chapters 4,5	(x(x)(x)(x)...) (max. 63 characters)	STATION CODE INVALID

Use

May be used in a Standard Schedules Message (SSM), or in an Ad Hoc Schedules Message (ASM), with Action Identifier **"NAC"**.

When a message cannot be processed successfully, the recipient may send an SSM or ASM message, using Action Identifier **"NAC"**, to advise the sender of the original message that the message content has not been successfully processed in the recipient's system. Reject Reason provides an explanation as to why the message could not be successfully processed.

Reject Reason is always preceded by an Error Line, to identify the line in the original message, or submessage, containing an error, and a space.

Values

Refer to SSIM Appendix E for standard Reject Reason texts.

RELEASE (SELL) DATE — DEI – – –

The Release (Sell) Date is intended to show the first date when a specified schedule can be opened for sale		
Application	**Format**	**Example**
Chapter 7	nnaaann	14MAR01

REQUEST ALL RESERVATIONS — DEI 507

Indication that all reservations must be requested from the control point in advance of any sale		
Application	**Format**	**Example**
Chapters 4,5,7	*	*
***The Data Element Identifier implies this condition. No additional data required**.		

Use

This data element should be used to indicate that carrier requires booking agents to request all reservations from the control point in advance (rather than using “Free Sale”, “Sell and Report” or other reservation facilities) for traffic intending to enplane at the board point for carriage to and subsequent deplaning at the off point.

The segment should be displayed and construction of transfer connections is allowed, but the flight segment must be accompanied by appropriate text, e.g.

REQ ALL RES

REQUESTED TIMINGS — DEI – – –

Information provided by Coordinators to advise airlines of the initial slot time(s) they requested		
Application	**Format**	**Example**
Chapter 6	aa.nnnn	RD.0910

Format

An optional element consisting of four digits. In the case of Chapter 6, these digits are preceded by a code defining flight arrival or flight departure.

Chapter 6 Application

Used within the SAL, SCR, SMA and SIR messages. Initial Requested Time is always preceded by a blank space, then **RA** and a full stop/period if it refers to the flight arrival, or **RD** and a full stop/period if it refers to the flight departure. It is positioned after the Passenger Terminal Identifiers (if applicable), or Frequency Rate, or the Service Type if no Frequency Rate applies.

Chapter 6 describes the procedure to be followed when the use of Initial Requested Time results in the maximum message line length being exceeded.

RESTRICTED PAYLOAD — DEI 105

Application	Format	Example
Chapters 4,5,7	(n)(n)(n)(n)(n)na	49950K

Use

Provided by a carrier when the standard payload of an aircraft is restricted on a certain leg.

When used, the payload restriction quantity is suffixed by **“K”** for kilograms and by **“L”** for pounds.

SCHEDULE STATUS DEI – – –

The status of the specified schedule provided to a recipient		
Application	**Format**	**Example**
Chapter 7	a	P

Chapter 7 Application

The following codes are used:

P	Provisional, Draft, Proposed, Subject to Change, etc.
C	Confirmed, Effective, Working, Firm, etc.

SCHEDULE VALIDITY DISCONTINUE DATE DEI – – –

The end date of a schedule update or a request for a schedule update for a specific Flight Designator		
Application	**Format**	**Example**
Chapter 4	nnaaa(nn)	01MAY

Format

The date is expressed as the first two numerics for the day of the month and the first three alphabetic characters (in English spelling) for the month and, optionally, the two last numerics for the year.

The year may be omitted if the date is within 11 months from the current date.

Use

The date always relates to the Aircraft (not Passenger) STD.

The Schedule Validity Discontinue Date must conform to the applicable Time Mode.

SCHEDULE VALIDITY EFFECTIVE DATE DEI – – –

The start date of a schedule update or a request for a schedule update for a specific Flight Designator		
Application	**Format**	**Example**
Chapter 4	nnaaa(nn)	01MAY

Format

The date shall be expressed as the first two numerics for the day of the month and first three alphabetic characters (in English spelling) for the month and, optionally, the two last numerics for the year.

The year may be omitted if the date is within 11 months from the current date.

Use

The date always relates to the Aircraft (not Passenger) STD.

The Schedule Validity Effective Date must conform to the applicable Time Mode.

SCHEDULED TIME OF AIRCRAFT ARRIVAL (AIRCRAFT STA) DEI – – –

The scheduled arrival time of an aircraft at the terminal or arrival gate/position at an airport		
Application	**Format**	**Example**
Chapters 3,4,6,7	nnnn	2400
Chapter 5	(nn)nnnn	301900

Use

STA shall always be expressed by four digits indicating the 24 hours clock timing and be in the range of 0001 through 2400.

Arrivals at midnight (i.e. the end of the day) are always stated as 2400.

The 24 hour clock format is hhmm (hours and minutes). Where 'hh' does not exceed 24 and 'mm' does not exceed 59. It is expected that system validation will accept only valid time values (hours and minutes) and will not make any conversions should a time be submitted where the value of the 'hours' exceeds 24 and 'minutes' exceeds 59. The only valid value in the hour 24 is minutes 00).

For example:

'hh' hours

2400, 0001, 1340, 1540 are valid values

2701 is not valid and should not be converted to 0301 but rejected as an error also

2401 should not be converted but rejected as an error.

'mm' minutes

0006, 0053, 0059 are valid values

0066 is not valid and should not be converted to 0106 but rejected as an error

STA always refers to the on-block time of the aircraft.

STA can be expressed in local time in Chapters 3, 4, 5 and 7.

Chapter 5 Application

The time may optionally be preceded by the 2 numeric digits of the day of month.

If any of the arrival or departure dates within a sub-message is different from the Flight Identifier Date, the specification of the date is mandatory.

SCHEDULED TIME OF AIRCRAFT DEPARTURE (AIRCRAFT STD) DEI – – –

The scheduled departure time of an aircraft from the terminal or departure gate/position at an airport		
Application	**Format**	**Example**
Chapters 3,4,6,7	nnnn	0000
Chapter 5	(nn)nnnn	010145

Use

STD shall always be expressed by four digits indicating the 24 hours clock timing and be in the range of 0000 through 2359.

Departures at midnight (i.e. the beginning of the new day) are always stated as 0000.

The 24 hour clock format is hhmm (hours and minutes). Where 'hh' does not exceed 23 and 'mm' does not exceed 59. It is expected that system validation will accept only valid time values (hours and minutes) and will not make any conversions should a time be submitted where the value of the 'hours' exceeds 23 and 'minutes' exceeds 59.

For example:

'hh' hours

2359, 0001, 1340, 1540 are valid values

2701 is not valid and should not be converted to 0301 but rejected as an error

'mm' minutes

0006, 0053, 0059 are valid values

0066 is not valid and should not be converted to 0106 but rejected as an error

STD always refers to the off-block time of the aircraft.

STD can be expressed in local time in Chapters 3, 4, 5 and 7.

Chapter 5 Application

The time may optionally be preceded by the 2 numeric digits of the day of the month.

If any of the arrival or departure dates within a sub-message is different from the Flight Identifier Date, the specification of the date is mandatory.

SCHEDULED TIME OF PASSENGER ARRIVAL (PASSENGER STA) DEI – – –

The Scheduled Time of Arrival of the passenger at the terminal or arrival gate at an airport		
Application	**Format**	**Example**
Chapters 4,5,7	nnnn	1540

Default: *If the data element is not stated the default applies, i.e. the Passenger STA will be the same as the Aircraft STA.*

Note that there is no default for Chapter 7, since the Passenger STA is a mandatory field on Record Type 3.

Use

It is only different from the Aircraft STA when a transfer is effected between aircraft and terminal/gate by another transport mode (e.g. mobile lounge) for which a different arrival time is scheduled.

The Passenger STA shall always be expressed by four digits indicating the 24 hours clock timing and be in the range of 0001 through 2400.

Arrivals at midnight (i.e. the end of the day) are always stated as 2400.

Note: *Every arrival time in UTC converted to 2400 in LT may cause problems in some CRS, as they cannot handle 2400 LT.*

The 24 hour clock format is hhmm (hours and minutes). Where 'hh' does not exceed 24 and 'mm' does not exceed 59. It is expected that system validation will accept only valid time values (hours and minutes) and will not make any conversions should a time be submitted where the value of the 'hours' exceeds 24 and 'minutes' exceeds 59. (The only valid value in the hour 24 is minutes 00).

For example:

'hh' hours

2400, 0001, 1340, 1540 are valid values

2701 is not valid and should not be converted to 0301 but rejected as an error, also

2401 should not be converted but rejected as an error.

'mm' minutes

0006, 0053, 0059 are valid values

0066 is not valid and should not be converted to 0106 but rejected as an error

SCHEDULED TIME OF PASSENGER DEPARTURE (PASSENGER STD) DEI – – –

The Scheduled Time of Departure of the passenger at the terminal or departure gate at an airport		
Application	**Format**	**Example**
Chapters 4,5,7	nnnn	1255

Default: *If the data element is not stated the default applies, i.e. the Passenger STD will be the same as the Aircraft STD.*

Note that there is no default for Chapter 7, since the Passenger STD is a mandatory field on Record Type 3.

Use

It is only different from the Aircraft STD when a transfer is effected between terminal/gate and aircraft by another transport mode (e.g. mobile lounge) for which a different departure time is scheduled.

The Passenger STD shall always be expressed by four digits indicating the 24 hours clock timing and be in the range of 0000 through 2359.

Departures at midnight (i.e. the beginning of the new day) are always stated as 0000.

Note: *Every departure time in UTC converted to 0000 in LT may cause problems in some CRS, as they cannot handle 0000 LT.*

The 24 hour clock format is hhmm (hours and minutes). Where 'hh' does not exceed 23 and 'mm' does not exceed 59. It is expected that system validation will accept only valid time values (hours and minutes) and will not make any conversions should a time be submitted where the value of the 'hours' exceeds 23 and 'minutes' exceeds 59.

For example:

'hh' hours

2359, 0000, 1340, 1540 are valid values

2701 is not valid and should not be converted to 0301 but rejected as an error

'mm' minutes

0006, 0053, 0059 are valid values

0066 is not valid and should not be converted to 0106 but rejected as an error

SEASON DEI – – –

A set of schedules that is valid within a specified IATA Season		
Application	**Format**	**Example**
Chapters 6,7	ann	S02

→ *For detailed DST information per country, refer to Appendix F*

Format

The Season consists of either **"S"** for Summer or **"W"** for Winter followed by the two last digits of the year when the IATA Season begins.

Use

The IATA Seasons relate to UTC, are Northern Hemisphere related, and are named Summer and Winter.

'Summer' begins on the last Sunday in March and 'Winter' begins on the last Sunday in October.

SECURE FLIGHT INDICATOR DEI 504

Indication that flight is subject to requirements for Secure Flight		
Application	**Format**	**Example**
Chapters 4,5,7	a	S
DEI 504 is only applicable to Chapters 4 and 5		

Use

Use this data element when there is a legal requirement to disclose full Secure Flight passenger data for flights that are operated by a carrier (operating and marketing) flying to/from/within/over the U.S.

Chapters 4, 5 Applications

The Secure Flight Indicator consists of:

(a) The Data Element Identifier, always the digit “504” (not applicable in Chapter 7)

(b) S to indicate TSA regulations apply

Chapter 7 Applications

The Secure Flight Indicator consists of:

△ (a) S to indicate TSA regulations apply

(b) X to indicate TSA regulations do not apply

Note: *Indicator X will be used in byte 122, in Record Type 3, to override the default indicator in Record Type 2.*

(c) Byte 122 in Record Type 3 is reserved for this indicator on a flight leg level

(d) Byte 169 in Record Type 2 is reserved for this indicator if ALL flights are subject to the regulations.

SEGMENT DEI – – –

The Board Point followed by the Off Point		
Application	**Format**	**Example**
Chapters 4,5,7	aaaaaa	FRALHR

Use

The Segment will always be associated with a Data Element Identifier.

Chapters 4 and 5 Applications

To compress message size the special Station QQQ may be used within Segment to indicate all Board Points and/or all Off Points.

e.g. QQQDDD or DDDQQQ in a flight operation AAA-BBB-CCC-DDD-EEE-FFF covers all Segments to/from DDD.

QQQQQQ would cover all legs and segments AAA-FFF inclusive.

Note: *Once data has been transmitted for **segments** using Data Element Identifiers, it can only be modified or deleted in the following ways:*

*For SSM and ASM, either by using Action Identifiers **“SKD”, “NEW”, “CNL”** or **“RPL”** (replacing or deleting **all** data);*

or

*by specific replacement using the same Data Element Identifier(s) with Action Identifier **“ADM”** to specify new or revised information*

or

*by specific deletion, by using the same Data Element Identifier(s) but stating **"NIL"** after the Data Element Identifier—e.g. AAABBB 111/NIL.*

Chapter 7 Application

Complete replacement of all data is being carried out, including any segment data previously specified using Data Element Identifiers.

In cases where a single Data Element Identifier contains a list of items/codes (e.g. In-Flight Service Information—Data Element Identifier 503, it is not possible to add, delete or revise the individual items/codes in the list on their own. In such cases, a **complete** revised list of items/codes must be transmitted.

SEGMENT INFORMATION DEI – – –

Additional information in the form of Data Element Identifiers—with or without a data element—that is associated with Segments			
Application		**Format**	**Example**
Chapters 4,5	Segment	aaaaaa	LHROPO
	Separator	(blank)	(blank)
	Data Element Identifier	nn(n)	101
	Separator	(/)	/
	Data Element	(x(x)(x)(x)...)	C64M254

Format

Segment Information consists of:

(a) Segment;

(b) Data Element Identifier;

(c) data element (as applicable).

SERIAL NUMBER CHECK REFERENCE DEI – – –

A check number to ensure that data set records are processed in the correct sequence		
Application	**Format**	**Example**
Chapter 7	nnnnnn	00254

Format

A six byte mandatory field in Record Type 5.

Use

It must be equal to the Record Serial Number of the previous record irrespective of its Record Type and one less than the Record Serial Number of the same Trailer Record.

SERVICE TYPE DEI – – –

Classification of or flight or flight leg as well as the type of service provided		
Application	**Format**	**Example**
Chapters 3,4,5,6,7	a	J

Use

The Service Type is a leg oriented data element.

For multi-leg flights where the Service Type differs by leg, no assumption can be made about multi-leg segments.

For example, a flight routing AAA-BBB-CCC might have Service Type **"J"** on leg AAA-BBB and Service Type **"C" on leg BBB-CCC**.

No assumption can be made about Service Type on the segment AAA-CCC.

If segment AAA-CCC carries Charter traffic only, which is not to be sold in reservations systems, then Traffic Restriction **'A'** should be used for this segment.

Any other information about the Service Type of the segment may be provided by using Bilateral Information Data Element Identifiers (800-899), based upon bilateral agreement/understanding between the parties concerned.

Note: *The Service Type is **not** a substitute for the Aircraft Configuration/Version.*

Values

Refer to SSIM Appendix C.

STANDARD MESSAGE IDENTIFIER (SMI) DEI – – –

Unique identification of a SSIM Standard Message		
Application	**Format**	**Example**
Chapters 4,5,6	aaa	SSM

Format

A 3-letter code appearing first in a Standard Message Text (SMT).

The SMI is always recognised from the remainder of the SMT by being separated by a Line Separator(<≡).

Use

The SMI is used by the recipient (human or computer) to determine the subsequent handling of the textual content in the message.

SMIs are assigned and controlled by IATA Management and are published in the IATA Airline Coding Directory.

Each SMI has a reference to the source where complete documentation is available.

Values

This manual constitutes the source documentation for the following approved SMIs:

ASM	Ad Hoc Schedules Message
SAL	Slot Initial Allocation List
SAQ	Slot/Schedule Availability Query
SCR	Slot Clearance Request/Reply
SHL	Slot Historic List
SIR	Slot/Schedule Information Request/Reply
SMA	Schedule Movement Advice
SSM	Standard Schedules Message
WCR	Waitlist Change Request/Reply
WIR	Waitlist Information Request/Reply

STATION DEI – – –

Identification of an airport for airline purposes.		
Application	**Format**	**Example**
Chapters 3,4,5,6,7	aaa	JFK

Values

The 3-letter Location Identifiers for airports, for airline purposes, are assigned by IATA in accordance with IATA Resolution 763, and are published in the IATA Airline Coding Directory.

Fictitious Points

→ For further guidance, refer to Appendix H: Fictitious Points

The following Stations (Location Identifiers) have been reserved as "fictitious points" for the purpose of schedule construction to:

(a) overcome day duplication problems;

(b) describe legs of elapsed times covering more than 23:59 hours.

Fictitious Point	Fictitious Country and Time Zone	Applicable UTC Variation
QZX	ZZ 1	UTC
QPX	ZZ 2	UTC + 7
QMX	ZZ 3	UTC − 7
QPY	ZZ 4	UTC + 14
QMY	ZZ 5	UTC − 14

When a fictitious point is used at the beginning or the end of a routing, the leg(s) and its (their) related segments containing such a fictitious point are deemed as non-operational and segments including them are never saleable.

In all other cases, the fictitious point is deemed to be a technical stop.

SUBJECT TO GOVERNMENT APPROVAL DEI 201

Indication that the operation of, and/or carriage of traffic on, a particular leg or segment is subject to Government approval		
Application	**Format**	**Example**
Chapters 4,5,7	*	*
*** This Data Element implies this condition. No additional data is required.**		

Use

The flight segment should be displayed and construction of transfer connections is allowed, but the display of the flight segment must be accompanied by appropriate text, e.g.

```
SUBJ GOVT APPROVAL
```

SUPPLEMENTARY INFORMATION DEI – – –

Supplementary free text information		
Application	**Format**	**Example**
Chapters 4,5,6	SI→x(x)(x)...	SI SUBJECT TO CLEARANCE

Format

The Supplementary Information always starts on a new line and consists of:

(a) Supplementary Information Identifier, always the character combination **"SI"**;

(b) Information separator, always a space;

(c) Free text information, which is recommended not to exceed 3 lines of text.

Chapters 4, 5 and 6 Applications

Supplementary Information is such free text information that cannot be stated within the frames of the standard format for a message or record.

The Supplementary Information is always placed after the processable text pertaining to an Action Identifier, or a complete message.

TIME MODE DEI – – –

Indication of whether Local Time or UTC (Universal Time Coordinated) is being used		
Application	**Format**	**Example**
Chapters 4,5	aa(a)	UTC
Chapter 7	a	L

→ For further guidance, refer to Appendix H: Time Mode

Values

Code	Description	Application
LT	Local Time	Chapters 4 and 5
UTC	UTC	Chapters 4 and 5
L	Local Time	Chapter 7
U	UTC	Chapter 7

TIMING FLEXIBILITY IDENTIFIER DEI – – –

Identification of the timing flexibility of a Carrier when requesting a slot from an Airport Coordinator		
Application	**Format**	**Example**
Chapter 6	aa.nnnnnnnn	FA.10001230

Format

An optional element consisting of eight digits. In the case of Chapter 6, these digits are preceded by a code defining flight arrival or flight departure.

The first four digits are used for the earliest possible timing, followed by four digits for the latest possible timing.

Use

Linked flights should always be filed with an arrival **and** a departure Timing Flexibility Identifier.

If the Operator cannot accept flexibility on one of the two legs, this will be indicated by providing the same timings in the timing flexibility range as for the slot request, for example, 12351235.

If the Operator has timing flexibility that exceeds the Day(s) of Operation, this can be indicated by first providing the earliest time possible for the arrival in the first day(s), and then the latest timing acceptable in the next day(s).

If the result is that the first four digits represent a time later than the time in the next four digits, it means that the flexibility extends into the next day(s), for example, 12350820.

Chapter 6 Application

Used within the SCR message. Timing Flexibility Identifier is always preceded by a blank space, then **FA** and a full stop/period if it refers to the flight arrival time, or **FD** and a full stop/period if it refers to the flight departure time. It is positioned after the Passenger Terminal Identifier (if applicable), or Frequency Rate, or the Service Type if no Frequency Rate applies.

Chapter 6 describes the procedure to be followed when the use of the Timing Flexibility Identifier results in the maximum message line length being exceeded.

TITLE OF CONTENTS DEI – – –

The application of the data set in plain language		
Application	**Format**	**Example**
Chapter 7	AIRLINE ƀSTANDARDƀ SCHEDULEƀ DATAƀ SETƀƀƀƀƀ	AIRLINEƀSTANDARDƀ SCHEDULEƀDATAƀSETƀƀƀƀƀ

Format

A mandatory 34 byte field in Record Type 1.

Use

For SSIM data sets, this field always reads **"AIRLINE STANDARD SCHEDULE DATA SET"**.

TITLE OF DATA DEI – – –

The title of the information included in the data set in plain language		
Application	**Format**	**Example**
Chapter 7	xxx... (29 char.)	SASƀIATAƀDRAFTƀW01ƀƀƀƀƀ

Chapter 7 Format

An optional 29 byte field in Record Type 2.

TRAFFIC RESTRICTION CODE DEI – – –

Information provided by a carrier to specify restrictions to carry traffic or specify limitations on the carriage of traffic		
Application	**Format**	**Example**
Chapter 7	(a)(a)(a)(a)(a)(a)(a)(a)(a)(a)(a)	ƀƀAƀZƀƀƀƀƀ

Note: *Refer to **Traffic Restriction Note** for specific Chapters 4 and 5 applications.*

→ Refer to Appendix G for the Traffic Restriction Codes Table.

Default: *In the absence of any information to the contrary, it is assumed that any Traffic Restriction stated applies to all forms of traffic (passenger, cargo, mail) at Board and/or Off Point.*

General Traffic Restriction Information

A Traffic Restriction Code allows a carrier to specify:

(a) any restriction on the carriers right to carry traffic

(b) any limitations on the actual carriage of traffic on a segment

Use of Traffic Restriction Overflow indicator 'Z' (chapter 7 only)

'Z' is used instead of a valid Traffic Restriction when the following circumstances exist:

(a) A different Traffic Restriction applies to passenger, cargo or mail

(b) A Traffic Restriction applies to one or two categories of service only but not to all three categories

(c) A Traffic Restriction is required on the 12 leg of a flight (leg sequence number >11)

The 'Z' indicator is placed in the byte where the Traffic Restriction Code would have been placed. And in these conditions, the Traffic Restriction code details must be supplied with the appropriate Data Element Identifier 170–173 in the Segment Data Record (type 4 record):

170—Traffic Restriction Code Applicable to Passengers only

171—Traffic Restriction Code Applicable to Cargo/Mail only

172—Traffic Restriction Code Applicable to Cargo only

173—Traffic Restriction Code Applicable to Mail only

Note: *more than one traffic restriction cannot be applied to a segment for the **same** category of service.*

Note: *This is not necessary when Traffic Restriction Codes* ***M, Q, T, V, W*** *or* ***X*** *apply to passengers and Traffic Restriction Codes* ***A, O, A, K, N*** *or* ***Y*** *respectively apply to cargo/mail because this is assumed. Therefore, only the passenger restriction needs to be specified.*

Additional Traffic Restriction Code Information (Chapter 7 only)

Other Data Element Identifiers can be used to either modify how the Traffic Restriction code is applied to the Segment or to provide free format text relating to the Traffic Restriction Code.

The Data Element Identifiers and related data elements that can be used for these purposes are:

710—Traffic Restriction Code Qualifier at Board Point

711—Traffic Restriction Code Qualifier at Off Point

712—Traffic Restriction Code Qualifier at Board and Off Points

The Chapter 7 application is explained below.

Chapter 7 Application

Flights with 1 to 11 legs–bytes 150–160

The Traffic Restriction code is input in the appropriate byte of the 11 byte field in the SSIM Flight Leg Record (record type 3) starting at byte 150 through and including byte 160.

Each byte from 150 to 160 relates sequentially to the **Off Points** in the routing, and these bytes therefore accommodate a flight with 11 non-stop legs.

When the Traffic Restriction applies to all categories of traffic (passenger/cargo/mail) then the Traffic Restriction Code is placed in the byte that matches the off point on that leg. (Refer to example).

When the Traffic Restriction is not applicable to all categories of service or a different Traffic Restriction applies to only some categories, then the **Traffic Restriction Overflow Indicator** 'Z' is placed in the byte where the Traffic Restriction Code would have been placed. In these circumstances the Traffic Restriction code is supplied with the appropriate Data Element Identifier 170–173 in the Segment Data Record (type 4 record).

Flights with 12 or more legs

Traffic Restriction Overflow Indicator 'Z' is placed in byte 161. When 'Z' is used in these circumstances the Traffic Restriction code is supplied with the appropriate Data Element Identifier 170–173 in the Segment Data Record (type 4 records).

Chapter 7 Application Examples

For details of longer Flight Routings refer to Chapter H.

This diagram represents the Leg Sequence number and Traffic Restriction Code Fields and byte positions of the leg records in the Flight Itinerary:

Example 1 Routing LHR–FCO–THR–DEL–BKK

LHR FCO	Different restrictions apply	Overflow indicator Z is placed on line 01 (depart LHR) in byte 150 (off point FCO) **K** applies to passenger traffic; use DEI 170 with K in first text position **A** applies to cargo traffic: use DEI 172 with A in first text position
FCO THR	Q restriction applies	**Q** is placed on line 02 (depart FCO) in byte 151 (off point THR)
THR DEL	No Traffic Restriction applies	leave blank
DEL BKK	A restriction applies	**A** is placed on line 04 (depart DEL) in byte 153 (off point BKK)

Record Type 1	Leg Seq. Number 12–13	Dep STN 37–39	Arr STN 55.57	Applicable byte position for Traffic Restriction Codes relevant to each off point on each leg											
				150	151	152	153	154	155	156	157	158	159	160	161
			Off >	FCO	THR	DEL	BKK								
3	01	LHR	FCO	Z											
3	02	FCO	THR		Q										
3	03	THR	DEL	-											
3	04	DEL	BKK				A								

Example 2 Routing LHR–AMS–FCO–BKK–SIN–BNE–PER–ADL

LHR AMS	B Restriction applies	**B** is placed on line 01 (depart LHR) in byte 151 (off point AMS)
LHR FCO	Q Restriction applies	**Q** is placed on line 01 (depart LHR) in byte 152 (off point FCO)
LHR PER	Q Restriction applies	**Q** is placed on line 01 (depart LHR) in byte 156 (off point PER)
BKK SIN	No Traffic Rights	**W** is placed on line 04 (depart BKK) in byte 153 (off point SIN)
BKK PER	Different Restrictions apply	Overflow Indicator Z is placed on line 04 (depart BKK) in byte 155 (off point PER) **W** applies to passenger traffic use **DEI 170** with W in first text position of DEI **DG170BKKPERW** **A** applies to cargo traffic use **DEI 172** with A in first text position of DEI **DG172BKKPERA**
BNE PER	Different Restrictions apply	Overflow Indicator Z is placed on line 06 (depart BNE) in byte 155 (off point PER) **X** applies to passenger traffic use **DEI 170** with **X** in first text position of DEI **FG170BNEPERX** **A** applies to cargo traffic use **DEI 172** with **A** in first text position of DEI **FGBNEPERA**
PER ADL	A restriction applies	**A** is placed on line 07 (depart PER) in byte 156 (off point ADL)

Record Type 1	Leg Seq. Number 12–13	Dep STN 37–39	Arr STN 55.57	Applicable byte position for Traffic Restriction Codes relevant to each off point on each leg											
				150	151	152	153	154	155	156	157	158	159	160	161
			Off >	AMS	FCO	BKK	SIN	BNE	PER	ADL					
3	01	LHR	AMS	B		Q			Q						
3	02	AMS	FCO												
3	03	FCO	BKK												
3	04	BKK	SIN				W		Z						
3	05	SIN	BNE												
3	06	BNE	PER						Z						
3	07	PER	ADL							A					

TRAFFIC RESTRICTION CODE APPLICABLE TO CARGO ONLY DEI 172

A Traffic Restriction only applicable to cargo traffic		
Application	**Format**	**Example**
Chapters 4,5,7	a	K

Use

Can only be used when **"Z"** has been specified instead of a valid Traffic Restriction Code.

Chapters 4 and 5 Applications

Specified as a sub-element within Traffic Restriction Note.

TRAFFIC RESTRICTION CODE APPLICABLE TO CARGO/MAIL ONLY DEI 171

A Traffic Restriction Code only applicable to cargo/mail traffic		
Application	**Format**	**Example**
Chapters 4,5,7	a	N

Use

Can only be used when **"Z"** has been specified instead of a valid Traffic Restriction Code.

Chapters 4 and 5 Applications

Specified as a sub-element within Traffic Restriction Note.

TRAFFIC RESTRICTION CODE APPLICABLE TO MAIL ONLY DEI 173

A Traffic Restriction Code only applicable to mail traffic		
Application	**Format**	**Example**
Chapters 4,5,7	a	A

Use

Can only be used when **"Z"** has been specified instead of a valid Traffic Restriction Code.

Chapters 4 and 5 Applications

Specified as a sub-element within Traffic Restriction Note.

TRAFFIC RESTRICTION CODE APPLICABLE TO PASSENGERS ONLY DEI 170

A Traffic Restriction Code only applicable to passenger traffic		
Application	**Format**	**Example**
Chapters 4,5,7	a	A

Use

Can only be used when **"Z"** has been specified instead of a valid Traffic Restriction Code.

Chapters 4 and 5 Applications

Specified as a sub-element within Traffic Restriction Note.

⊗

TRAFFIC RESTRICTION CODE LEG OVERFLOW INDICATOR DEI – – –

Indication of a Traffic Restriction Code overflow situation		
Application	**Format**	**Example**
Chapter 7	Z	Z

Format

The byte contains **"Z"** instead of the Traffic Restriction code with the applicable Traffic Restriction Code being stated using Data Element Identifier(s) 170–173 as appropriate.

Use

The 'Z' indicator is used instead of a valid Traffic Restriction when:

(a) A different Traffic Restriction applies to Passenger, Cargo or Mail

(b) A Traffic Restriction applies to one or two categories only, but not to all three categories

(c) A Traffic Restriction is required on leg 12 of a flight (leg sequence number >11)

TRAFFIC RESTRICTION CODE QUALIFIER AT BOARD AND OFF POINTS DEI 712

Indication that traffic restriction requirements must be met at both the Board Point and the Off Point		
Application	**Format**	**Example**
Chapters 4,5,7	*	*
***The Data Element implies this condition. No additional data is required**.		

Use

This data element cannot be used in combination with a Traffic Restriction Qualifier at Board Point (DEI 710) or Traffic Restriction Qualifier at Off Point (DEI 711) on the same segment.

Use DEI 712 (Traffic Restriction Qualifier at Board and Off Points) to require traffic restriction application at both Board **and** Off points of the Segment.

→ *For further guidance, see also Appendix H, Traffic Restriction Qualifiers 710–712*

Chapters 4, 5 and 7 Applications

- Traffic Restriction **K** without DEI 710, 711 or 712

  The Segment must have a connection at **either** the Board Point **or** the Off Point, or the trip will not be displayed.

- Traffic Restriction **K** with DEI 712 (a combination of DEI 710/711)

  The Segment must have a connection at **both** the Board Point **and** at the Off Point, or the trip will not be displayed.

TRAFFIC RESTRICTION CODE QUALIFIER AT BOARD POINT DEI 710

Indication that traffic restriction requirements must be met at the Board Point and that no restrictions are implied at the Off Point		
Application	**Format**	**Example**
Chapters 4,5,7	*	*
***The Data Element implies this condition. No additional data is required**.		

Use

This data element cannot be used in combination with a Traffic Restriction Qualifier at Off Point (DEI 711) or Traffic Restriction Qualifier at Board and Off Points (DEI 712) on the same segment.

Use DEI 712 (Traffic Restriction Qualifier at Board and Off Points) to require traffic restriction application at both Board **and** Off points of the Segment.

→ *For further guidance, see also Appendix H, Traffic Restriction Qualifiers 710–712*

Chapters 4, 5 and 7 Applications

- Traffic Restriction **K** without DEI 710, 711 or 712

  The Segment must have a connection at **either** the Board Point **or** the Off Point, or the trip will not be displayed.

- Traffic Restriction **K** with DEI 710

  The Segment must have a connection at the Board Point, or the trip will not be displayed.

- Traffic Restriction **K** with DEI 712 (a combination of DEI 710/711)

  The Segment must have a connection at **both** the Board Point **and** at the Off Point, or the trip will not be displayed.

TRAFFIC RESTRICTION CODE QUALIFIER AT OFF POINT DEI 711

Indication that traffic restriction requirements must be met at the Off Point and that no restrictions are implied at the Board Point		
Application	**Format**	**Example**
Chapters 4,5,7	*	*
***The Data Element implies this condition. No additional data is required**.		

Use

This data element cannot be used in combination with a Traffic Restriction Qualifier at Board Point (DEI 710) or Traffic Restriction Qualifier at Board and Off Points (DEI 712) on the same segment.

Use DEI 712 (Traffic Restriction Qualifier at Board and Off Points) to require traffic restriction application at both Board **and** Off points of the Segment.

→ *For further guidance, see also Appendix H, Traffic Restriction Qualifiers 710–712*

Chapters 4, 5 and 7 Applications

- Traffic Restriction **K** without DEI 710, 711 or 712

  The Segment must have a connection at **either** the Board Point **or** the Off Point, or the trip will not be displayed.

- Traffic Restriction **K** with DEI 711

  The Segment must have a connection at the Off Point, or the trip will not be displayed.

- Traffic Restriction **K** with DEI 712 (a combination of DEI 710/711)

  The Segment must have a connection at **both** the Board Point **and** at the Off Point, or the trip will not be displayed.

TRAFFIC RESTRICTION NOTE DEI 8

Indication that certain restrictions apply to carriage of passengers, cargo and/or mail, on a flight or part of a flight						
Application	**Element**	**Format**	**Ex 1**	**Ex 2**	**Ex 3**	**Ex 4**
Chapters 4,5	Segment	aaaaaa	FCOMAD	LHRCAI	LHRBOS	FCOMAD
	Space	→				
	Data Element Identifier	8	8	8	8	8
	Separator	/	/	/	/	/
	Traffic Restriction Code	a	Q	Z	Y	Q
	Separator	(/)		/	/	/
	Additional Data Element Identifier	(nnn)		170	710	782 STPVR MAX 24 HRS
	Separator	(/)		/		
	Data Element	(a)		Q		

→ *Refer to Appendix G for the Traffic Restriction Codes Table*

Refer to **Traffic Restriction Code** for General Traffic Restriction information

Default: *In the absence of any information to the contrary, it is assumed that any Traffic Restriction stated applies to all forms of traffic (passenger, cargo, mail) and at both Board and Off Points*.

Format

The Traffic Restriction Note consists of:

(a) Segment—mandatory;

(b) Data Element Identifier 8—mandatory;

(c) The applicable Traffic Restriction Code that may be found in the Traffic Restriction Codes Table—mandatory.

Statement of the standard text is not required.

(d) An appropriate Data Element Identifier, conditional;

(e) The Data Element detail relevant to the Data Element Identifier that is used—conditional

(i) DEI 170–173 Data Element is the Traffic Restriction

(ii) DEI 710–712 Data Element is not required

If more than one Traffic Restriction is required then each restriction needs to be stated separately.

Use

General Traffic Restriction Information

A Traffic Restriction Code allows a carrier to specify:

(a) any restriction on the carrier's right to carry traffic, and

(b) any limitations on the actual carriage of traffic on a segment

Use of Traffic Restriction Overflow Indicator 'Z'

'Z' is used instead of a valid Traffic Restriction when the following circumstances exist:

(a) a different Traffic Restriction applies to passenger, cargo or mail

(b) a Traffic Restriction applies to one or more categories of service only but not to all three

The 'Z' indicator is placed in the position where the Traffic Restriction would have been submitted. For these conditions the Traffic Restriction code must then be supplied as a Data Element within the appropriate Data Element Identifier 170–173

170—Traffic Restriction Code Applicable to Passengers only

171—Traffic Restriction Code Applicable to Cargo/Mail only

172—Traffic Restriction Code Applicable to Cargo only

173—Traffic Restriction Code Applicable to Mail only

Note: *more than one traffic restriction cannot be applied to a segment for the* ***same*** *category of service.*

Additional Traffic Restriction Code Information

Other Data Element Identifiers can be used to either modify how the Traffic Restriction code is applied to the Segment or to provide free format text relating to the Traffic Restriction Code.

The Data Element Identifiers and related data elements that can be used for these purposes are:

710—Traffic Restriction Code Qualifier at Board Point

711—Traffic Restriction Code Qualifier at Off Point

712—Traffic Restriction Code Qualifier at Board and Off Points

Example 1	Traffic Restriction Q applies to all categories of traffic	`FCOMAD 8/Q`
Example 2	Traffic Restriction Q applies to passenger traffic, no restriction submitted for cargo	`LHRCAI 8/Z/170/Q`
Example 2a	Traffic Restriction Q applies to passenger traffic, and a different Traffic Restriction A applies to cargo	`GRUGIG 8/Z/170/Q` `GRUGIG 8/Z/172/A`
Example 3	Traffic Restriction Y applies at board point	`LHRBOS 8/Y/710`
Example 4	Traffic Restriction Q applies to all categories of traffic in addition DEI 782 to convey free text has been submitted	`FCOMAD 8/Q/782/STPVR MAX 72 HRS`

UTC/LOCAL TIME VARIATION DEI – – –

Indication of the difference in hours and minutes between UTC and local time		
Application	**Format**	**Example**
Chapter 7	±nnnn	`+0100`

→ *For further guidance, refer to Appendix H: Time Mode/Daylight Saving Time.*

Format

UTC is to be expressed as `+0000` (Chapter 7).

Use

The difference will be negative if UTC is later than the local time.

The sign difference is always applied to UTC in order to obtain local time.

Chapters 4 and 5 Applications

The specification is achieved by using Data Element Identifier 97 (UTC/Local Time Variation Specification).

Chapter 7 Application

The UTC/Local Time Variation has a fixed format consisting of:

(a) A plus or minus sign;

(b) Four numerics where the two first express the ‘hour’ and the two last express the ‘minutes’.

Values

Refer to SSIM Appendix F.

UTC/LOCAL TIME VARIATION SPECIFICATION DEI 97

Identification of a UTC/Local Time Variation where the originator of an SSM/ASM wants to override a UTC/Local Time Variation held in the recipient's systems		
Application	**Format**	**Example**
Chapters 4,5	aaa/xnnnn	`ABC/P0200`

Format

The ‘x’ represents either **“M”** (minus) or **“P”** (plus).

UTC is to be represented as `P0000`.

Chapters 4 and 5 Applications

The UTC/Local Time Variation Specification always refers to the Station stated within the format for the Board/Off Point of the stated Segment.

This data element need not be stated if the UTC/local time variation is in agreement with SSIM Appendix F.

The UTC/Local Time Variation Specification always refers to the Station stated within its format. If this Station equals the Board Point of the stated Segment, it refers to the departure time from that Board Point, whereas if it equals the Off Point of the stated Segment, it refers to the arrival time at that Off Point.

In cases where QQQ has been used for Board and/or Off Point in the stated Segment, and the Station stated in the UTC/Local Time Variation Specification does not equal either Board or Off Point, the variation must be assumed to apply to departure and/or arrival times at that Station as appropriate.

CHAPTER 3—STANDARD PRINT LAYOUTS FOR SCHEDULES INFORMATION

3.1 General

It is anticipated that schedules information will be transmitted electronically using the formats described in Chapters 4, 5 or 7. However should it prove necessary for the data to be distributed in a paper format the Print Layouts described in this chapter should be used.

3.2 Description

The recommended layouts are designed for printers with a fixed horizontal spacing of 10 character positions per inch and a vertical spacing of 6 lines per inch. For preferred type fonts for printed presentations refer to Chapter 2.

Page Headings should be used; they should contain the following information:

Airline Designator (designator of the airline issuing the document)

Schedule status, e.g. Draft, etc.

Date of issue

Season and/or period of validity

Brief description of page contents, e.g. geographical area[1]

Page number

UTC or local time

[1] It is recommended that the stations served by a flight be specified either by using the Location Identifier or the full name. The specification of country names therefore becomes unnecessary, but if country names are specified, they should be based on ISO Standard 3166 as reflected in Appendix F.

3.3 Data Elements Required

In order to ensure correct interpretation of schedule information in printed format, a minimum data element requirement must be observed.

The following data elements are considered essential and they shall be present in any printed schedule according to format requirements outlined in Chapter 2:

Flight Designator (Airline Designator and Flight Number)

Period of Operation

Day(s) of Operation (frequency)

Service Type

Aircraft Type

Aircraft Configuration/Version **and/or** Passenger Reservations Booking Designator

Stations, Passenger Terminal (if applicable), Scheduled Times of Aircraft Departure and Arrival (leg information)

Other data elements may be included at the discretion of the carrier. It is recommended that such optional items follow the coding and formatting rules for Chapter 4 applications.

Flights and their data elements may be presented **horizontally** or **vertically** as shown in examples of Section 3.6.

It is desirable to highlight **changes** to the previous issue.

3.4 Code Sharing Flights

It is recommended that a black diamond (◆) symbol be used to denote code sharing flights, or flight legs, in printed time tables. These are flights, or flight legs, which are either physically operated under a different Flight Designator by another carrier, or under another carrier's Flight Designator.

It is also recommended, in order to help clarification for readers of printed timetables, that the carrier physically operating such flights, and/or franchise/commuter type flights, is identified. This may be accomplished by using the operating carrier's Airline Designator after the symbol, or by having a table at the beginning of the timetable identifying, by Flight Designator range, who the operating carriers are.

In cases where disclosure of Aircraft Owner/Wet Lease Airline is a legal requirement, the same principles can be used.

3.5 Plane Change

It is recommended that a symbol or plain text be used to show when a change of aircraft en route is required on a multi-leg flight. If a symbol is used, it is recommended that it be an open triangle (Δ), and its purpose should be described at the beginning of the time table.

3.6 Examples (for demonstration only)

3.6.1 Horizontal presentation *(Swiss Final Draft W02)*

```
*  EDS  SPIDER  * GERMANY                                                    *    SWISS
UTC TIMES       * FRANKFURT                                          * WINTER 2002/2003
FLTNR           EFFECTIVITY          A/C A/C A/P  PT        A/P  PT        S T
CAR   NUM       FROM  TO    OPSDAY   CAR TYP FROM D  STD MI TO   A  STA MI T R CONF

LX    1070 ♦(A)27OCT 29MAR 12345..     319 ZRH  A  0655   FRA  2  0805   J   CY

           ♦(A)27OCT 29MAR ......7     AR1 ZRH  A  0655   FRA  2  0805   J   CY

           ♦(A)02NOV 29MAR .....6.     ER4 ZRH  A  0655   FRA  2  0805   J   CY

LX    1072 ♦(B)28OCT 27DEC 12345..     AR1 ZRH  A  1120   FRA  2  1225   J   CY

           ♦(B)03JAN 28MAR 12345..     AR1 ZRH  A  1120   FRA  2  1225   J   CY

LX    1074     27OCT 29MAR 12345..     AR1 ZRH  A  1510   FRA  2  1620   J   CY

LX    1076     27OCT 29MAR 12345.7     319 ZRH  A  1655   FRA  2  1800   J   CY

               02NOV 29MAR .....6.     AR1 ZRH  A  1655   FRA  2  1800   J   CY

LX    1080     27OCT 29MAR 1234567     AR1 ZRH  A  1910   FRA  2  2020   J   CY

*******************************************************************************

LX    1081 ♦(C)27OCT 29MAR 1234567     ER4 FRA  2  0600   ZRH  A  0700   J   CY

LX    1071 ♦(D)27OCT 29MAR 12345..     319 FRA  2  0850   ZRH  A  0955   J   CY

           ♦(D)27OCT 29MAR ......7     AR1 FRA  2  0850   ZRH  A  0955   J   CY

           ♦(D)02NOV 29MAR .....6.     ER4 FRA  2  0850   ZRH  A  0955   J   CY

LX    1073 ♦(E)28OCT 27DEC 12345..     AR1 FRA  2  1310   ZRH  A  1410   J   CY

           ♦(E)03JAN 28MAR 12345..     AR1 FRA  2  1310   ZRH  A  1410   J   CY

LX    1075     27OCT 29MAR 12345..     AR1 FRA  2  1735   ZRH  A  1840   J   CY

LX    1077     27OCT 29MAR 12345.7     319 FRA  2  1855   ZRH  A  2000   J   CY

               02NOV 29MAR .....6.     AR1 FRA  2  1855   ZRH  A  2000   J   CY


(A). OPERATING ALSO AS            AA 6271                          ZRH-FRA
(B). OPERATING ALSO AS            AA 6234                          ZRH-FRA
(C). OPERATING ALSO AS            AA 6235                          FRA-ZRH
(D). OPERATING ALSO AS            AA 6311                          FRA-ZRH
(E). OPERATING ALSO AS            AA 6313                          FRA-ZRH
```

3.6.2 Vertical presentation *(SAS W00 Draft)*

SAS DRAFT 01SEP00 29OCT00-24MAR01 PASSENGER FLIGHTS TIME UTC PAGE 129

FAR EAST THAILAND AND SINGAPORE

SCANDINAVIA-BANGKOK AND SINGAPORE 29OCT00-24MAR01

SK971 763 C66M122 J 29OCT00 24MAR01 12345..	SK973 343 C45M256 J 29OCT00 24MAR01 1234567	FLIGHT NO AIRCRAFT VERSION STC PERIOD DAYS	SK972 763 C66M122 J 29OCT00 24MAR01 .23456.	SK974 343 C45M256 J 29OCT00 24MAR01 1234567
1435 0130	1800 0535	D CPH A A BKK D	1935 1110	0020 △1525
	763 C66M122	AIRCRAFT VERSION		763 C66M122
0230 0450	△0635 0855	D BKK A A SIN D	1010 0800	1425 1200

△ = aircraft change

Passenger Terminals: CPH 3
BKK 1
SIN 1

CHAPTER 4–STANDARD SCHEDULES MESSAGE PROCEDURE

4.1 INTRODUCTION

4.2 PRINCIPLES AND RULES

4.3 MESSAGE STANDARDS

4.3.1 Introduction
4.3.2 Security of Message Exchanges
4.3.3 SSM Composition

4.4 SSM ACTION SUB-MESSAGES

NEW Insertion of New Flight Information
CNL Cancellation
RPL Replacement of Existing Flight Information
SKD Schedule Update

ACK Acknowledgement
ADM Change of Existing Information Expressed by the Use of Data Element Identifier Only
CON Change of Aircraft Configuration/Version
EQT Change of Equipment Information
FLT Change of Flight Designator
NAC Not Actioned
REV Revision of Period of Operation and/or Day(s) of Operation
RSD Request for Schedule Data
TIM Change of Time Information

4.5 TECHNICAL MESSAGE SPECIFICATION

4.5.1 SSM Message Specification

4.6 SSM SUB-MESSAGE DEFINITION

4.6.1 NEW–Insertion of New Flight Information
4.6.2 CNL–Cancellation
4.6.3 RPL–Replacement of Existing Flight Information
4.6.4 SKD–Schedule Update

4.6.5 ACK–Acknowledgement
4.6.6 ADM–Change of Existing Information Expressed by the Use of Data Element Identifier Only
4.6.7 CON–Change of Aircraft Configuration/Version
4.6.8 EQT–Change of Equipment Information
4.6.9 FLT–Change of Flight Designator

4.6.10 NAC–Not Actioned
4.6.11 REV–Revision of Period of Operation and/or Day(s) of Operation
4.6.12 RSD–Request for Schedule Data
4.6.13 TIM–Change of Time Information

4.7 ADDITIONAL MESSAGE EXAMPLES
4.7.1 NEW–Insertion of New Flight Information
4.7.2 CNL–Cancellation
4.7.3 SKD–Schedule Update Message
4.7.4 EQT–Change of Equipment Information
4.7.5 TIM–Change of Time Information

4.1 Introduction

In order to allow all airlines to electronically exchange information on amendments to their basic schedules, i.e. the planned and regularly operated flights, standard message formats have been agreed.

These formats also allow the airlines to submit these amendments to schedule aggregators.

The message formats have been designed to provide as much clarity as possible for the message users and the received message details can be processed either by computer or by manual methods.

Permanent changes to the basic schedules are transmitted using the Standard Schedules Message (SSM).

A message may consist of one or more Action sub-messages. Each sub-message will have its own Action Identifier to identify a specific change being made to the basic schedule.

The rules for the use and composition of this message, together with detailed specifications and examples, are explained in the following Sections of this Chapter.

Deviations from the basic schedules on single days may be transmitted in the Ad Hoc Schedule Message (ASM). The rules for the use and composition of this message, together with detailed specifications and examples, are explained in Chapter 5.

The Standard Schedules Message (SSM) forms part of a complex system of timetable information exchange.

In order to facilitate industry-wide acceptance of these standards, a range of optional features is included to ensure complete compatibility with the standards set in Chapter 7 for the exchange of computerized schedules.

These features include items such as the use of local dates and times, leg and segment oriented traffic, and sales information in the form of fixed or free format data elements.

4.2 Principles and Rules

In order to ensure full interline exchangeability, it is strongly recommended that airlines adhere to the rules for the construction of the standard messages as described in this Chapter.

The common rules for the data elements as described in Chapter 2 of this Manual should also be followed.

- The SSM exchange usually takes place on the basis of bilateral understanding.
- The schedules advised in the SSM are generally considered released and open for sale with effect from the issuance of the message.
- The addresses of the SSM are bilaterally agreed. The SSM may contain a number of Flight Designators for any one carrier (represented by a unique Airline Designator) and multiple periods of validity. It is the responsibility of the recipient to select the areas of the schedule that meet their own requirements.
- The information received by SSM supersedes any corresponding information (within the definitions of the Action Identifiers) previously advised by computerized schedules or SSM.
- For the purpose of synchronisation with computerized schedules data sets, it is recommended that a computer generated time stamp be used in the message envelope.
- The schedules advised by SSM will not normally override any changes that have previously been advised by Ad Hoc Schedules Message (ASM). Therefore, the Periods of Operation can be quoted irrespective of any existing ad hoc changes. These ad hoc changes will remain in effect unless modified by another Ad Hoc Schedules Message or unless the ASM Withdrawal Indicator has been used.
- The periods of validity need not conform to discrete IATA seasons and can give open-ended Periods of Operation. This will result in a reduction in the number and length of messages.

- It is recommended that at least 360 days of advance schedules data, including Minimum Connect Time data, should be distributed on an equal basis to all schedule aggregators, reservations and ticketing systems in which a carrier participates, to maximise the efficiencies of such systems.
- It must be assumed that some recipients will convert the contents of the SSM from UTC to local dates/times and vice versa. The UTC/local time relationship must therefore be based on the current information in Appendix F and any subsequent updates transmitted by message.
- If the (time) relation used is different or doubtful, it should be stated using Data Element Identifier 97 (UTC/Local Time Variation Specification).
- Where a series of interrelated messages are to be sent, each part message must conform to the rules for constructing SSM messages, but must be shown as a part message by means of the Message Sequence Reference.
- If a Flight Leg(s) Change Identifier in a sub-message does not match the routing of the flight(s) being changed, that sub-message may be ignored by the recipient.
- If a Segment on a line of a sub-message does not match a Segment of the flight(s) being changed, that line of the sub-message may be ignored by the recipient.
- If a change or cancellation is received for which the period and/or days of operation to be changed/cancelled do not match those stored, or a new flight is added which is already stored, it is recommended that the correct schedule information should be requested from the sender, e.g. by use of SSM/RSD sub-message.
- The ACK/NAC exchange takes place on the basis of bilateral agreement.
- It is assumed that it is the responsibility of the SSM sender to ensure that they receive an ACK or a NAC and take the appropriate action if they do not.

4.3 Message Standards

4.3.1 Introduction

The technical specifications for message construction are based on the guidelines of the A4A/IATA Systems and Communications Reference Manuals. The SCR volumes are made available within the PADIS extranet site: www.iata.org/padis.

The standard message is enclosed within the standard communications “envelope”, i.e. signal identifiers, serial number, priority, address, originator and date/time of transmission.

The message will then read line by line by always starting at the left, i.e. left justified. For Type B messages, the maximum line length of the message must not exceed 69 printable characters including spaces. Some systems may restrict line length limits to less than 69 characters.

Although the Systems and Communications Reference Manual defines the maximum number of characters for one telegraph (Type B) message as 3,840, some service providers have the capability to increase this limit to 64,000 characters.

Type B users are, however, cautioned that some systems may not be able to receive or process messages with more than 3,840 characters.

This maximum length limitation takes into account all printed and non-printed characters, such as letter shifts, figure shifts and new line.

In the extreme case of a Flight, Period/Frequency, Equipment or Leg Information line overflow, the excess elements should be stated on an additional line immediately following and must start with a Data Element Identifier.

When the message limit is exceeded, messages must be broken into separate parts with a break between two sub-messages. Use can be made of the Message Sequence Reference to connect the related parts of the total message.

4.3.2 Security of Message Exchanges

To secure the exchange of SSMs between computers, it is recommended that the following techniques be used:

- Sequence all SSMs using the Message Sequence Reference;
- Process all SSMs in the same order as they are produced, according to the Message Sequence Reference;
- Request the re-transmission of a missing SSM using a "REPEAT" message:

  SSM

  REP

  ‹Message Sequence Reference›

  An "REP" message is sent by the receiver to inform the sender that a message has not been received. The SSM originator will identify the missing message by its Message Sequence Reference and will re-transmit the original message identified with original Message Sequence Reference and with the same data content.
- Inform the receiver of the last message sent within the current date of issue using an "END" message:

  SSM

  REP

  ‹Message Sequence Reference›

  The "END" message is designed to close the current sequence of messages before opening another one. It will allow recovery with an "REP" of the last message of the current sequence if this message has not been received. The Message Group Serial Number of the "END" message will be the previous Message Group Serial Number incremented by 1. The "END" message is unique for each date of issue.

4.3.3 SSM Composition

Each SSM message consists of 5 major components:

- Message address/originator in accordance with communications instructions;
- Message Header including the Schedule Standard Message Identifier (SSM), the Time Mode and an optional Message Reference;
- One or more Action Sub-Messages that always include the Action Identifier, the flight identification and appropriate data elements, and always ends with a Sub-Message separator;
- An optional Supplementary Information Sub-Message applicable to the whole message;
- Message End in accordance with communications instructions.

The SSM Action Sub-Messages are defined in Section 4.4.

The general technical specifications for SSM message construction are defined in Section 4.5.

The SSM Action Sub-Message composition and examples are defined in Section 4.6.

4.4 SSM Action Sub-Messages

The SSM Action Sub-Messages are an integral part of the SSM. The most widely used Sub-Messages with their Action Identifier, name and their functional use are:

NEW **Insertion of New Flight Information**

This sub-message inserts a new Flight Designator or adds new Periods of Operation and/or new Day(s) of Operation (at the Frequency Rate, if stated) for an existing Flight Designator. When used in conjunction with an SKD sub-message, the data contained in the NEW submessage supersedes the data, if any, for the period specified by its associated SKD sub-message.

CNL **Cancellation**

This sub-message cancels (i.e. withdraws) the complete routing of a Flight Designator within the Period and on the Day(s) of Operation (and at the Frequency Rate, if stated).

RPL **Replacement of Existing Flight Information**

This sub-message replaces all existing information pertaining to a Flight Designator within the Period and on the Day(s) of Operation (at the Frequency Rate, if stated) by the new information. Other Periods and other Day(s) of Operation during the period stated (if existing) are not affected. The extension of periods and/or the addition of days of operation are not permitted using RPL sub-messages.

SKD **Schedule Update**

This sub-message cancels all existing information for the Flight Designator specified from the Schedule Validity Effective Date as specified to (and including) the Schedule Validity Discontinue Date, if stated.

It indicates that revised schedule information, if any, will follow immediately in one or more associated sub-messages using Action Identifier NEW.

This Action Identifier may only occur once in a message, or a series of messages linked by Message Sequence Reference, and when used, must occur as the first action sub-message in the group of linked messages. It must be followed only by NEW sub-messages with the same Flight Designator.

Other SSM Action Sub-Message with their Action Identifier, name and functional use are:

ACK **Acknowledgement**

This sub-message advises the sender that the message content has been accepted by the receiving system and has been ***successfully processed***.

It is recommended that ACK messages are not sent when the message first arrives with the recipient–but when the message has been successfully passed through the recipients system and processed correctly.

ADM **Change of Existing Information Expressed by the Use of Data Element Identifier Only**

For a specific Flight designator/Period of Operation and day(s) of Operation this sub message changes only those data elements which are specified by the use of a Data Element Identifier.

- Other Periods of Operation/Day(s) of Operation remain unchanged
- When cancelling existing information the statement ‘NIL’ must be made
- If changes are leg related, replacement data need only be transmitted for legs where the data has changed. For example, in the case of Data Element Identifier 10, it is not necessary to transmit all legs that have Data Element Identifier 10 information, only those legs where DEI 10 needs changing

CON **Change of Aircraft Configuration/Version**

For a specific Flight designator/Period of Operation and day(s) of Operation this sub message changes only the Aircraft configuration Version information and/or the conditional data elements (if supplied) that can be transmitted in this type of message.

- Other Periods of Operation/Day(s) of Operation remain unchanged
- Data Elements previously transmitted and therefore already held in a recipients system and not included in the message remain unchanged

EQT **Change of Equipment Information**

For a specific Flight designator/Period of Operation and day(s) of Operation this sub message changes only the Equipment information and/or the conditional data elements (if supplied) that can be transmitted in this type of message.

- Other Periods of Operation/Day(s) of Operation remain unchanged
- Data Elements previously transmitted and therefore already held in a recipients system and not included in the message remain unchanged

FLT **Change of Flight Designator**

This sub-message only changes the Flight Designator (and its associated data elements) and/or the Operational Suffix, for the Period and Day(s) of Operation (at the Frequency Rate, if stated).

Other data elements, Periods and Day(s) of Operation of the original Flight Designator and Operational Suffix are not affected.

NAC **Not Actioned**

This sub-message advises the sender of the original message that the message content has not been successfully processed in the recipients system. The NAC message will contain a text message that explains the reason for the error and include the line number(s) in the message where the error has occurred.

It is recommended that in the case of a format error only one reason for error is displayed. Format errors are likely to cause a corrupted message that cannot be validated further. In the case of a validation error, some receiving systems may advise when more than one validation error has occurred.

Users are advised to research the complete message before re-sending the message.

A list of error messages currently in use and their text structure can be found in Appendix E.

REV **Revision of Period of Operation and/or Day(s) of Operation**

This sub-message only changes the Period of Operation and/or Day(s) of Operation (at the Frequency Rate, if stated) within a Flight Designator. REV may only be used when there is no change of equipment, routing and timings within the Period of Operation and/or on the Day(s) of Operation being revised.

By stating the Period of Operation and Day(s) of Operation to be changed, and then the revised Period(s) of Operation and Day(s) of Operation, additions and deletions can be made.

A Period of Operation can be extended and/or Day(s) of Operation be added by the use of **REV** provided that they did not exist before and that there is no change of equipment, routing and timing data.

A Period of Operation can be shortened and/or Day(s) of Operation be deleted by replacing the old data with the revised data and accepting that periods and/or days not referred to in the revised data are implicitly cancelled.

A **REV** sub-message can combine additions and deletions providing that there is no change of equipment, routing and timing data.

RSD **Request for Schedule Data**

This sub-message enables a Request or Repeat of schedule data for the Flight Designator specified from the Schedule Validity Effective Date as specified to (and including) the Schedule Validity Discontinue Date, if stated.

The reply to an RSD message must always begin with an SKD sub-message, followed by any associated NEW sub-messages.

The action identifier RSD may not be used in a message with any other action identifiers.

The reply to any SSM containing RSD sub-messages must be addressed to the specific telegraphic address from which the RSD sub-message was originated unless otherwise bilaterally agreed.

TIM **Change of Time Information**

For a specific Flight designator/Period of Operation and day(s) of Operation this sub message changes only the Timing information and/or the conditional data elements (if supplied) that can be transmitted in this type of message.

- Other Periods of Operation/Day(s) of Operation remain unchanged
- Data Elements previously transmitted and therefore already held in a recipients system and not included in the message remain unchanged.

4.5 Technical Message Specification

The logical structure (i.e. message specification) for the SSM is defined in the table below and includes the status, format description and example for each data element.

Reference should be made to the Data Element Glossary in Chapter 2 (Section 2.6) for the exact composition and detailed descriptions of each data element used in the SSMs.

Data expressed by Data Element Identifiers in connection with all Action Identifiers except NEW, CNL, RPL remain unchanged from previously supplied data. Where desired, removal of such data is achieved by specification of text **"NIL"** using Action Identifier ADM.

Certain elements may have a different meaning depending on their position within the message. It is recommended that caution be taken in the use of these elements to avoid the exchange of ambiguous or contradictory information.

This applies to the following elements:

- Joint Operation Airline Designators
- Operating Airline Disclosure—Code Share
- Aircraft Owner
- Cockpit Crew Employer
- Cabin Crew Employer
- Onward Flight
- Operating Airline Disclosure—Shared Airline or Wet Lease Designation.

4.5.1 SSM Message Specification

Data Element	Sub-Message Action Identifiers													Format	Data Element Example	Notes
	NEW	CNL	RPL	SKD	ACK	ADM	CON	EQT	FLT	NAC	REV	RSD	TIM			
Message Heading																
Standard Message Identifier	M	M	M	M	M	M	M	M	M	M	M	M	M	SSM	SSM	
End of line	M	M	M	M	M	M	M	M	M	M	M	M	M	<≡		
Time Mode	C	C	C	C	C	C	C	C	C	C	C	C	C	aa(a)	UTC or LT	If data element not provided assume UTC
End of line	C	C	C	C	C	C	C	C	C	C	C	C	C	<≡		
Message Reference																
Message Sequence Reference	C	C	C	M	C	C	C	C	C	C	C	-	C	nnaaannnnnannn	24MAY00144E003	
Creator Reference	O	O	O	O	C	O	O	O	O	C	O	O	O	/x(x[-34])	/REF 123/449	If included, must begin with slash (/)
End of line	C	C	C	M	C	C	C	C	C	C	C	C	C	<≡		Mandatory if any of above elements included
Action Information																
Action Identifier	M	M	M	M	M	M	M	M	M	M	M	M	M	aaa	SKD	
Separator (Space)	C	C	C	C										→	Space	Mandatory if ASM Withdrawal Indicator included
ASM Withdrawal Indicator	C	C	C	C										XASM	XASM	
End of line	M	M	M	M	M	M	M	M	M	M	M	M	M	<≡		
Flight Information																
Flight Designator	M	M	M	M		M	M	M	M		M	M	M	XX(a)nnn(n)	LX544	
Operational Suffix	C	C	C			C	C	C	C		C		C	a	A	
Separator (Space)											M			→	Space	
Existing Period of Operation (From and To Dates)											M			nnaaa(nn) → nnaaa(nn)	12AUG02 Space 30SEP02	From and To Dates must be separated by a Space Year is Optional in both dates
Separator (Space)											M			→	Space	
Existing Day(s) of Operation											M			n(n)(n)(n)(n)(n)(n)	1234567	
Existing Frequency Rate											C			/W2	/W2	If included, must begin with slash (/)
Separator (Space)	C		C			C								→	Space	Mandatory if the next element included
Joint Operation Airline Designators (DEI 1)	C		C			C								1/xx(a)/xx(a)(/xx(a))	1/LX/LH	If required If included, there must be a minimum of 2 or a maximum of 3 Airline Designators with each preceded by a slash (/)
Separator (Space)	C		C			C	C	C						→	Space	Mandatory if the next element included
Operating Airline Disclosure—Code Share (DEI 2)	C		C			C	C	C						2/xx(a) or 2/X	2/DL or 2/X	If required
Separator (Space)	C		C			C	C	C						→	Space	Mandatory if the next element included
Aircraft Owner (DEI 3)	C		C			C	C	C						3/xx(a) or 3/X	3/LX or 3/X	If required
Separator (Space)	C		C			C	C	C						→	Space	Mandatory if the next element included
Cockpit Crew Employer (DEI 4)	C		C			C	C	C						4/xx(a) or 4/X	4/LH or 4/X	If required
Separator (Space)	C		C			C	C	C						→	Space	Mandatory if the next element included
Cabin Crew Employer (DEI 5)	C		C			C	C	C						5/xx(a) or 5X	5/LX or 5/X	If required
Separator (Space)	C		C			C	C	C						→	Space	Mandatory if the next element included

Data Element	Sub-Message Action Identifiers													Format	Data Element Example	Notes
	NEW	CNL	RPL	SKD	ACK	ADM	CON	EQT	FLT	NAC	REV	RSD	TIM			
Operating Airline Disclosure—Shared Airline or Wet Lease Designation (DEI 9)	C		C			C	C	C						9/xx(a) or 9/X	9/DL or 9/X	If required
End of line	M	M	M	M		M	M	M	M		M	M	M	<≡		
For different Flight Designators with identical data, repeat from Flight Information		C				C	C	C				C		→		
Period/Frequency Information																
Schedule Validity Effective Date				M								M		nnaaa(nn)	12AUG(02)	Year is Optional
Separator (Space)				C								C		→	Space	Mandatory if Schedule Validity Discontinue Date included
Schedule Validity Discontinue Date				O								O		nnaaa(nn)	25SEP(0/2)	Year is Optional
Period of Operation (From and To Dates)	M	M	M			M	M	M	M		M		M	nnaaa(nn) → nnaaa(nn)	12AUG02 Space 30SEP02 Year is Optional in both dates	From and To Dates must be separated by a Space
Separator (Space)	M	M	M			M	M	M	M		M		M	→	Space	
Days of Operation	M	M	M			M	M	M	M		M		M	n(n)(n)(n)(n)(n)(n)	1(2)(3)(4)(5)(6)(7)	
Frequency Rate	C	C	C			C	C	C	C		C		C	/W2	/W2	If included, must begin with slash (/)
Separator (Space)	C		C			C								→	Space	Mandatory if the next element included
Joint Operation Airline Designators (DEI 1)	C		C			C								1/xx(a)/xx(a)(/xx(a))	1/LX/LH	If required If included, there must be a minimum of 2 or a maximum of 3 Airline Designators with each preceded by a slash (/)
Separator (Space)	C		C			C	C	C						→	Space	Mandatory if the next element included
Operating Airline Disclosure—Code Share (DEI 2)	C		C			C	C	C						2/xx(a) or 2/X	2/DL or 2/X	If required
Sparator (Space)	C		C			C	C	C						→	Space	Mandatory if the next element included
Aircraft Owner (DEI 3)	C		C			C	C	C						3/xx(a) or 3/X	3/LX or 3/X	If required
Separator (Space)	C		C			C								→	Space	Mandatory if the next element included
Cockpit Crew Employer (DEI 4)	C		C			C	C	C						4/xx(a) or 4/X	4/LH or 4/X	If required
Separator (Space)	C		C			C	C	C						→	Space	Mandatory if the next element included
Cabin Crew Employer (DEI 5)	C		C			C	C	C						5/xx(a) or 5/X	5/LX or 5/X	If required
Separator (Space)	C		C			C	C	C						→	Space	Mandatory if the next element included
Onward Flight (DEI 6)	O		O			O	O	O						6/xx(a)nnn(n)(a)(/n)	6/SQ103C/1	If required
Separator (Space)	C		C			C	C	C						→	Space	Mandatory if the next element included
Operating Airline Disclosure—Shared Airline or Wet Lease Designation (DEI 9)	C		C			C	C	C						9/xx(a) or 9/X	9/DL or 9/X	If required
End of line	M	M	M	M		M	M	M	M		M	M	M	<≡		
For different (revised) periods/frequencies with different data, repeat from Period/Frequency Information	C	C	C			C	C	C			C		C			If required

Data Element	Sub-Message Action Identifiers													Format	Data Element Example	Notes
	NEW	CNL	RPL	SKD	ACK	ADM	CON	EQT	FLT	NAC	REV	RSD	TIM			
New Flight Information																
Flight Designator					-	-	-	-	M	-		-	-	xx(a)nnn(n)	LX544	
Operational Suffix					-	-	-	-	C	-		-	-	a	A	If included
End of line					-	-	-	-	M	-		-	-	<≡		
Equipment Information																
Service Type	M		M				M	M						a	G	
Separator (Space)	M		M				M	M						→	Space	
Aircraft Type	M		M				M	M						xxx	M80	
Separator (Space)	M		M				M	M						→	Space	
Passenger Reservations Booking Designator	C		C				C	C						a(x)(x)(x)(x)..	FCML	
Passenger Reservations Booking Modifier	C		C				C	C						/aa(aa)(aa)(aa)...	/FNCN	If included, must begin with a slash (/)
Aircraft Configuration/Version	C		C				C	C						.a(x)(x)(x)(x)..	.FCM	If included, must start with a period (.)
Separator (Space)	C		C				C	C						→	Space	Mandatory if the next element included
Operating Airline Disclosure—Code Share (DEI 2)	C		C				C	C						2/xx(a) or 2/X	2/DL or 2/X	If required
Separator (Space)	C		C				C	C						→	Space	Mandatory if the next element included
Aircraft Owner (DEI 3)	C		C				C	C						3/xx(a) or 3/X	3/LX or 3/X	If required
Separator (Space)	C		C				C	C						→	Space	Mandatory if the next element included
Cockpit Crew Employer (DEI 4)	C		C				C	C						4/xx(a) or 4/X	4/LH or 4/X	If required
Separator (Space)	C		C				C	C						→	Space	Mandatory if the next element included
Cabin Crew Employer (DEI 5)	C		C				C	C						5/xx(a) or 5/X	5/LX or 5/X	If required
Separator (Space)	C		C				C	C						→	Space	Mandatory if the next element included
Onward Flight (DEI 6)	O		O				O	O						6/xx(a)nnn (n)(a)(/n)	6/SQ103C/1	If required
Separator (Space)	C		C				C	C						→	Space	Mandatory if the next element included
Operating Airline Disclosure—Shared Airline or Wet Lease Designation (DEI 9)	C		C				C	C						9/xx(a) or 9/X	9/DL or 9/X	If required
End of line	M		M				M	M						<≡		
For different data in different period/frequency, repeat from Period/Frequency Information	C		C				C	C								
Routing or Leg Information																
Flight Leg(s) Change Identifier						C	C	C						aaa/aaa(/aaa[·10])	LOS/ABJ	Included if change does not apply to whole routing
Departure Station	M		M										M	aaa	GVA	
Scheduled Time of Aircraft Departure (Aircraft STD)	M		M										M	nnnn	1830	
Date Variation for STD	C		C											/(M)n	/0	If included, must begin with a slash (/)
Scheduled Time of Passenger Departure (Passenger STD)	C		C										C	/nnnn	/1815	If included, must begin with a slash (/)
Separator (Space)	M		M										M	→	Space	Mandatory if the next element included
Arrival Station	M		M										M	aaa	FRA	
Scheduled Time of Aircraft Arrival (Aircraft STA)	M		M										M	nnnn	1945	
Date Variation for STA	C		C										C	/(M)n	/0	If included, must begin with a slash (/)
Scheduled Time of Passenger Arrival (Passenger STA)	C		C										C	/nnnn	/1955	If included, must begin with a slash (/)
Separator (Space)	C		C			C								→	Space	Mandatory if the next element included

Data Element	Sub-Message Action Identifiers													Format	Data Element Example	Notes
	NEW	CNL	RPL	SKD	ACK	ADM	CON	EQT	FLT	NAC	REV	RSD	TIM			
Joint Operation Airline Designators (DEI 1)	C		C			C								1/xx(a)/xx(a)(/xx(a))	1/LX/LH	If required If included, there must be a minimum of 2 or a maximum of 3 Airline Designators with each preceded by a slash (/)
Separator (Space)	C		C			C								→	Space	Mandatory if the next element included
Operating Airline Disclosure—Code Share (DEI 2)	C		C			C								2/xx(a) or 2/X	2/DL or 2/X	If required
Separator (Space)	C		C			C								→	Space	Mandatory if the next element included
Aircraft Owner (DEI 3)	C		C			C								3/xx(a) or 3/X	3/LX or 3/X	Included only if same physical aircraft continues
Separator (Space)	C		C			C								→	Space	Mandatory if the next element included
Cockpit Crew Employer (DEI 4)	C		C			C								4/xx(a) or 4/X	4/LH or 4/X	If required
Separator (Space)	C		C			C								→	Space	Mandatory if the next element included
Cabin Crew Employer (DEI 5)	C		C			C								5/xx(a) or 5/X	5/LX or 5/X	If required
Separator (Space)	C		C			C								→	Space	Mandatory if the next element included
Onward Flight) DEI 6)	O		O			O								6/xx(a)nnn(n)(a)(/n)	6/SQ103C/1	If required
Separator (Space)	C		C			C							C	→	Space	Mandatory if the next element included
Meal Service Note (DEI 7)	O		O			O							O	7/aa(a)(/aa(a))[-4] or 7//a(a) or 7/aa(a)(/aa(a)[-3] //a/(a))	7/FDC/CD/YS/MS/LS 7//S 7/CL//S	If required
Separator (Space)	C		C			C								→	Space	Mandatory if the next element included
Operating Airline Disclosure—Shared Airline or Wet Lease Designation (DEI 9)	C		C			C								9/xx(a) or 9/X	9/DL or 9/X	If required
End of line	M		M			C	C	C					M	<≡		
For next leg or group of consecutive legs, repeat from Routing or Leg Information; if different aircraft type etc., repeat from Equipment Information	C		C			C	C	C								
Segment Information																
Traffic Restriction Note (DEI 8)	C		C			C								aaaaaa→8/a(/nnn)(/x(x[-53])	GVAFRA 8/Z/173/A	If required ***Note:*** *Only Data Element Identifiers 170-173, 710-712 are allowed as Traffic Restriction Qualifiers.*
Or																
Other Segment Information	C		C			C	C	C	C				C	aaaaaa→nn(n)(/x(x[-57])	GVAFRA 10/LX836	If required
End of line	C		C			C	C	C	C				C	<≡		Mandatory if one of above elements included
For further Segment Information, repeat from Segment Information	C		C			C	C	C	C				C			If required

Data Element	Sub-Message Action Identifiers													Format	Data Element Example	Notes
	NEW	CNL	RPL	SKD	ACK	ADM	CON	EQT	FLT	NAC	REV	RSD	TIM			
Sub-Message Supplementary Information	O	O	O	O		O	O	O	O		O	O	O			All the following elements must be included if **Sub-Message Supplementary Information** is included
Supplementary Information Indicator	M	M	M	M		M	M	M	M		M	M	M	SI	SI	
Separator (Space)	M	M	M	M		M	M	M	M		M	M	M	→	Space	
Supplementary Information	M	M	M	M		M	M	M	M		M	M	M	x(x)...	ABCDEF	Free Text
End of line	M	M	M	M		M	M	M	M		M	M	M	<≡		
Sub-Message Separation	C	C	C	C		C	C	C	C		C	C	C	//		Also used if Supplementary Information for Whole Message follows
End of line	C	C	C	C		C	C	C	C		C	C	C	<≡		Mandatory if **Sub-Message Separation** included
For more sub-messages, repeat from applicable Action Information, or, if necessary, create a new physical message and repeat from Message Heading	C	C	C	C		C	C	C	C		C	C	C			
Supplementary Information for Whole Message	O	O	O	O		O	O	O	O		O	O	O			
Supplementary Information Indicator	M	M	M	M		M	M	M	M		M	M	M	SI	SI	
Separator (Space)	M	M	M	M		M	M	M	M		M	M	M	→	Space	
Supplementary Information	M	M	M	M		M	M	M	M		M	M	M	x(x)...		Free Text
End of line	M	M	M	M		M	M	M	M		M	M	M	<≡		
Reject Information																
Blank Line Separator										M				<≡		
Error Line (First)										M				nnn	004	
Separator (Space)										M				→	Space	
Reject Reason (First)										M				x(x[.63]	INVALID DEI 711	
End of line										M				<≡		
Error Line (Other)										O				nnn	006	
Separator (Space)										C				→	Space	Mandatory if Reject Reason (Other) included
Reject Reason (Other)										C				x(x[.63]	SYSTEM ERROR	
End of line										C				<≡		Mandatory if Reject Reason (Other) included
For further Reject Reasons, repeat from Error Line (Other)																
Repeat of Rejected Message																
Blank Line Separator										M				<≡		
Message Lines before Action Identifier										O				x(x)...		
Message Lines from Action Identifier										M				x(x)...		
End of line										M				<≡		

4.6 SSM Sub-Message Definition

The Sub-Message definition details the specific use of each functional sub-message and includes an example for each sub-message. Additional examples are included as Section 4.7.

Additional explanatory notes for each sub-message and data element are included when not covered by the general notes in SSM Message Specifications above.

The 'Status' column in each Table reflects the Status as shown in the SSM Message Specification Table (Section 4.5).

Reference should be made to the Data Element Glossary in Chapter 2 (Section 2.6) for the exact composition and detailed descriptions of each data element used in the SSM sub-messages.

4.6.1 NEW–Insertion of New Flight Information

Example:

```
SSM
LT
24MAY00144E003/REF 123/449
NEW XASM
LX544A 1/LX/LH 3/LX 4/LH 5/LX 9/LX
12AUG 30SEP 1234567/W2 6/LX545A/1
G M80 FCYML/FNCN.FCM
GVA1830/0/1815 FRA1945/0/1955 7/FDC/CD/YS/MS/LS
GVAFRA 8/Z/173/A
GVAFRA 10/LX836
```

→ *Refer to Section 4.7 for additional examples on the use of 'NEW'.*

Data Element	Data Element Example	Status	Use and Explanatory Notes
Message Heading			
Standard Message Identifier	SSM	M	
End of line	<≡	M	
Time Mode	LT	C	If data element not provided assume UTC
End of line	<≡	C	Mandatory if Time Mode included
Message Reference			
Message Sequence Reference	24MAY00144E003	C	Mandatory if linked to a previous SKD message, or, if a long message is split into parts. The Data Element is composed of: Date of Message (nnaaa); Message Group Serial Number (nnnnn); Continuation/End Code (a); Message Serial Number (nnn).
Creator Reference	/ REF 123/449	O	If included, must begin with a slash (/)
End of line	<≡	C	Mandatory if any of above elements included

Data Element	Data Element Example	Status	Use and Explanatory Notes
Action Information			
Action Identifier	NEW	M	
Separator (Space)	Space	C	Mandatory if ASM Withdrawal Indicator included
ASM Withdrawal Indicator	XASM	C	If applicable Must not be used if linked to a previous SKD message
End of line	<≡	M	
Flight Information			
Flight Designator	LX544	M	
Operational Suffix	A	C	If applicable
Separator (Space)	Space	C	Mandatory if the next element included
Joint Operation Airline Designators (DEI 1)	1/LX/LH	C	If applicable, applies to all legs subsequently stated
Separator (Space)	Space	C	Mandatory if the next element included
Operating Airline Disclosure—Code Share (DEI 2)			If applicable, applies to all legs subsequently stated. Not applicable if Operating Airline Disclosure—Shared Airline or Wet Lease Designation (DEI 9) is stated below.
Separator (Space)	Space	C	Mandatory if the next element included
Aircraft Owner (DEI 3)	3/LX	C	If applicable, applies to all legs subsequently stated
Separator (Space)	Space	C	Mandatory if the next element included
Cockpit Crew Employer (DEI 4)	4/LH	C	If applicable, applies to all legs subsequently stated
Separator (Space)	Space	C	Mandatory if the next element included
Cabin Crew Employer (DEI 5)	5/LX	C	If applicable, applies to all legs subsequently stated
Separator (Space)	Space	C	Mandatory if the next element included
Operating Airline Disclosure—Shared Airline or Wet Lease Designation (DEI 9)			If applicable, applies to all legs subsequently stated. Not applicable if Operating Airline Disclosure—Code Share (DEI 2) is stated above.
End of line	<≡	M	

Data Element	Data Element Example	Status	Use and Explanatory Notes
Period/Frequency Information			*Period/Frequency Information may be repeated on a separate line for different periods/frequencies with different information*
Schedule Validity Effective Date		-	
Separator (Space)		-	
Schedule Validity Discontinue Date		-	
Period of Operation–From and To Dates	12AUG 30/SEP	M	First date and Last date of Operation of the new schedule separated by a Space. Year is Optional in both dates.
Separator (Space)	Space	M	
Days of Operation	1234567	M	
Frequency Rate	/W2	C	If included, must begin with a slash (/)
The following data elements may be stated here if they have not already been stated under Flight Information: Joint Operation Airline Designators (DEI 1); Operating Airline Disclosure—Code Share (DEI 2) Aircraft Owner (DEI 3); Cockpit Crew Employer (DEI 4); Cabin Crew Employer (DEI 5)			If stated, the data elements apply for this period and frequency only
Separator (Space)	Space	C	Mandatory if the next element included
Onward Flight (DEI 6)	6/LX545A/1	O	Applies to the last leg of this flight for this period and frequency only
Separator (Space)	Space	C	Mandatory if the next element included
Operating Airline Disclosure—Shared Airline or Wet Lease Designation (DEI 9)			If stated, the data elements apply for this period and frequency only.
End of line	<≡	M	

Data Element	Data Element Example	Status	Use and Explanatory Notes
Equipment Information			Applies to all legs subsequently stated until repeated with the exception of the Onward Flight, which, if stated, applies to the last of the subsequently stated legs. *Period/Frequency Information and Equipment Information may be repeated on separate lines for different information in a different period/frequency.*
Service Type	`G`	M	
Separator (Space)	`Space`	M	
Aircraft Type	`M80`	M	
Separator (Space)	`Space`	M	
Passenger Reservations Booking Designator	`FCYML`	C	If the Passenger Reservations Booking Designator is not stated, then the Aircraft Configuration/ Version must be stated
Passenger Reservations Booking Modifier	`/FNCN`	C	If included, must start with a slash (/)
Aircraft Configuration/Version	`.FCM`	C	If included, must start with a period (.). If the Aircraft Configuration/Version is not stated then the Passenger Reservations Booking Designator must be stated
The following data elements may be stated here if they have not already been stated under Flight Information or Period/Frequency Information:			If stated, the data elements apply for this period and frequency only
Operating Airline Disclosure—Code Share (DEI 2)			
Aircraft Owner (DEI 3);			
Cockpit Crew Employer (DEI 4);			
Cabin Crew Employer (DEI 5);			
Onward Flight (DEI 6);			
Operating Airline Disclosure—Shared Airline or Wet Lease Designation (DEI 9)			
End of line	<≡	M	

Data Element	Data Element Example	Status	Use and Explanatory Notes
Routing or Leg Information			*Routing or Leg Information may be repeated on a separate line for the next leg/group of consecutive legs.* *If the Equipment Information for such legs is different, the Equipment Information is repeated first.*
Flight Leg(s) Change Identifier		-	
Departure Station	GVA	M	
Scheduled Time of Aircraft Departure (Aircraft STD)	1830	M	
Date Variation for STD	/0	C	If included, must begin with a slash (/). Specification of a zero value is optional.
Scheduled Time of Passenger Departure (Passenger STD)	/1815	C	If included, must begin with a slash (/)
Separator (Space)	Space	M	Mandatory if the next element included
Arrival Station	FRA	M	
Scheduled Time of Aircraft Arrival (Aircraft STA)	1945	M	
Date Variation for STA	/0	C	If included, must begin with a slash (/). Specification of a zero value is optional.
Scheduled Time of Passenger Arrival (Passenger STA)	/1955	C	If included, must begin with a slash (/)
The following data elements may be stated here if they have not already been stated under Flight Information, Period/Frequency Information or Equipment Information: Joint Operation Airline Designators (DEI 1); Operating Airline Disclosure—Code Share (DEI 2) Aircraft Owner (DEI 3); Cockpit Crew Employer (DEI 4); Cabin Crew Employer (DEI 5); Onward Flight (DEI 6)			If stated, the data element apply to this leg only
Separator (Space)	Space	C	
Meal Service Note (DEI 7)	7/FDC/CD/YS/MS/LS	O	If required
Separator (Space)	Space	C	Mandatory if the next element included

Data Element	Data Element Example	Status	Use and Explanatory Notes
Operating Airline Disclosure—Shared Airline or Wet Lease Designation (DEI 9)		C	This data element may be stated here if it has not already been stated under Flight Information, Period/Frequency Information or Equipment Information. If stated, the data elements applies to this leg only.
End of line	<≡	M	
Segment Information			If applicable, the information is composed of either the Traffic Restriction Note or the optional/conditional other Segment Information. *Additional Segment Information may be repeated on separate lines.*
Traffic Restriction Note (DEI 8)	GVAFRA 8/Z/173/A	C	If applicable
or			
Other Segment Information	GVAFRA 10/LX836	C	If applicable
End of line	<≡	C	Mandatory if one of above elements included
Sub-Message Supplementary Information		O	
Supplementary Information Indicator	SI	M	
Separator (Space)	Space	M	
Supplementary Information		M	Free Text
End of line	<≡	M	
Sub-Message Separation	//	C	Applicable if additional sub-messages are required or if Supplementary Information for Whole Message follows. *For more sub-messages, repeat from applicable Action Information.*
End of line	<≡	C	Mandatory if Sub-Message Separation included
Supplementary Information for Whole Message		O	
Supplementary Information Indicator	SI	M	
Separator (Space)	Space	M	
Supplementary Information		M	Free Text
End of line	<≡	M	

4.6.2 CNL–Cancellation

The Cancellation (CNL) Action Sub-Message may only be used to remove operations.

The Action Identifier ADM and the cancel code 'NIL' is used to cancel existing administrative information.

Example:

```
SSM
UTC
13JUN00901E002/REF150/212
CNL XASM
AA407P
12AUG 30SEP 1234567/W2
```

→ *Refer to Section 4.7 for additional examples on the use of 'CNL'.*

Data Element	Data Element Example	Status	Use and Explanatory Notes
Message Heading			
Standard Message Identifier	SSM	M	
End of line	<≡	M	
Time Mode	UTC	C	If data element not provided assume UTC
End of line	<≡	C	Mandatory if Time Mode included
Message Reference			
Message Sequence Reference	13JUN00901E002	C	Mandatory if a long message is split into parts. The Data Element is composed of: Date of Message (nnaaa); Message Group Serial Number (nnnnn); Continuation/End Code (a); Message Serial Number (nnn).
Creator Reference	/REF 150/212	O	If included, must begin with a slash (/)
End of line	<≡	C	Mandatory if either of any of above elements included
Action Information			
Action Identifier	CNL	M	
Separator (Space)	Space	C	Mandatory if ASM Withdrawal Indicator included
ASM Withdrawal Indicator	XASM	C	If applicable
End of line	<≡	M	

Data Element	Data Element Example	Status	Use and Explanatory Notes
Flight Information			*Flight Information may be repeated on a separate line for different flights with identical data/Information*
Flight Designator	AA407	M	
Operational Suffix	P	C	If applicable
End of line	<≡	M	
For different Flight Designators with identical data		C	Repeat Flight Information
Period/Frequency Information			*Period/Frequency Information may be repeated on a separate line for different periods/frequencies with different information*
Period of Operation–From and To Dates	12AUG 30SEP	M	First date and Last date of Operation of the cancelled schedule Separated by a Space. Year is Optional in both dates.
Separator (Space)	Space	M	
Days of Operation	1234567	M	
Frequency Rate	/W2	C	If included, must begin with a slash (/)
End of line	<≡	M	
Sub-Message Supplementary Information		O	
Supplementary Information Indicator	SI	M	
Separator (Space)	Space	M	
Supplementary Information		M	Free Text
End of line	<≡	M	
Sub-Message Separation	//	C	Also used if Supplementary Information for Whole Message follows. *For more sub-messages, repeat from applicable Action Information, or, if necessary, create a new physical message and repeat from Message Heading.*
End of line	<≡	C	Mandatory if Sub-Message Separation included
Supplementary Information for Whole Message		O	
Supplementary Information Indicator	SI	M	
Separator (Space)	Space	M	
Supplementary Information		M	Free Text
End of line	<≡	M	

4.6.3 RPL–Replacement of Existing Flight Information

The Replacement of Existing Flight Information (RPL) Sub-Message replaces all information pertaining to a Flight Designator on the periods/days stated.

Example:

```
SSM
UTC
13AUG00031C012/REF 92/101
RPL XASM
SQ102C1/SQ/MH 2/QF 3/QF 4/SQ 5/MH
12AUG 30SEP 1234567/W2 6/SQ103C/1
C 310 F10Y100/FO.F10Y120
SIN0730/0715 KUL0820/0835 7/FB/YS
QQQQQQ 8/Z/171/A
QQQQQQ 50/QF123
```

Data Element	Data Element Example	Status	Use and Explanatory Notes
Message Heading			
Standard Message Identifier	SSM	M	
End of line	<≡	M	
Time Mode	UTC	C	If data element not provided assume UTC
End of line	<≡	C	Mandatory if Time Mode included
Message Reference			
Message Sequence Reference	13AUG00031C012	C	Mandatory if a long message is split into parts. The Data Element is composed of: Date of message (nnaaa); Message Group Serial Number (nnnnn); Continuation/End Code (a); Message Serial Number (nnn).
Creator Reference	/REF 92/101	O	If included, must begin with a slash (/)
End of line	<≡	C	Mandatory if any of above elements included
Action Information			
Action Identifier	RPL	M	
Separator (Space)	Space	C	Mandatory if ASM Withdrawal Indicator included
ASM Withdrawal Indicator	XASM	C	If applicable
End of line	<≡	M	

Data Element	Data Element Example	Status	Use and Explanatory Notes
Flight Information			
Flight Designator	SQ102	M	
Operational Suffix	C	C	If applicable
Separator (Space)	Space	C	Mandatory if the next element included
Joint Operation Airline Designators (DEI 1)	1/SQ/MH	C	If applicable, applies to all legs subsequently stated
Separator (Space)	Space	C	Mandatory if the next element included
Operating Airline Disclosure—Code Share (DEI 2)	2/QF	C	If applicable, applies to all legs subsequently stated. Not applicable if Operating Airline Disclosure—Shared Airline or Wet Lease Designation (DEI 9) is stated below.
Separator (Space)	Space	C	Mandatory if the next element included
Aircraft Owner (DEI 3)	3/QF	C	If applicable, applies to all legs subsequently stated
Separator (Space)	Space	C	Mandatory if the next element included
Cockpit Crew Employer (DEI 4)	4/SQ	C	If applicable, applies to all legs subsequently stated
Separator (Space)	Space	C	Mandatory if the next element included
Cabin Crew Employer (DEI 5)	5/MH	C	If applicable, applies to all legs subsequently stated
Separator (Space)	Space	C	Mandatory if the next element included
Operating Airline Disclosure—Shared Airline or Wet Lease Designation (DEI 9)			If applicable, applies to all legs subsequently stated. Not applicable if Operating Airline Disclosure—Code Share (DEI 2) is stated above.
End of line	<≡	M	

Data Element	Data Element Example	Status	Use and Explanatory Notes
Period/Frequency Information			*Period/Frequency Information may be repeated on a separate line for different periods/frequencies with different information*
Period of Operation–From and To Dates	12AUG 30SEP	M	First date and Last date of Operation of the replaced schedule separated by a Space. Year is Optional in both dates.
Separator (Space)	Space	M	
Days of Operation	1234567	M	
Frequency Rate	/W2	C	If included, must begin with a slash (/)
The following data elements may be stated here if they have not already been stated under Flight Information: Joint Operation Airline Designators (DEI 1); Operating Airline Disclosure—Code Share (DEI 2) Aircraft Owner (DEI 3); Cockpit Crew Employer (DEI 4); Cabin Crew Employer (DEI 5)			If stated, the data elemet apply for this period and frequency only
Onward Flight (DEI 6)	6/SQ103C/1	O	Applies to the last leg of this flight for this period and frequency only
Separator (Space)	Space	C	Mandatory if the next element included
This data element may be stated here if it has not already been stated under Flight Information Operating Airline Disclosure—Shared Airline or Wet Lease Designation (DEI 9)		C	If stated, the data element applies for this period and frequency only
End of line	<≡	M	

Data Element	Data Element Example	Status	Use and Explanatory Notes
Equipment Information			Applies to all legs subsequently stated until repeated with the exception of the Onward Flight, which, if stated, applies to the last of the subsequently stated legs. *Period/Frequency Information and Equipment Information may be repeated on separate lines for different information in a different period/frequency.*
Service Type	C	M	
Separator (Space)	Space	M	
Aircraft Type	310	M	
Separator (Space)	Space	M	
Passenger Reservations Booking Designator	F10Y100	C	If the Passenger Reservations Booking Designator is not stated, then the Aircraft Configuration/ Version must be stated
Passenger Reservations Booking Modifier	/F0	C	If included, must start with a slash (/)
Aircraft Configuration/Version	.F10Y120	C	If included, must start with a period (.). If the Aircraft Configuration/Version is not stated then the Passenger Reservations Booking Designator must be stated
The following data elements may be stated here if they have not already been stated under Flight Information or Period/Frequency Information:			If stated, the data elements apply for this period and frequency only
Operating Airline Disclosure—Code Share (DEI 2)			
Aircraft Owner (DEI 3);			
Cockpit Crew Employer (DEI 4);			
Cabin Crew Employer (DEI 5);			
Onward Flight (DEI 6);			
Operating Airline Disclosure—Shared Airline or Wet Lease Designation (DEI 9)			
End of line	<≡	M	

Data Element	Data Element Example	Status	Use and Explanatory Notes
Routing or Leg Information			*Routing or Leg Information may be repeated on a separate line for the next leg/group of consecutive legs.* *If the Equipment Information for such legs is different, the Equipment Information is repeated first.*
Flight Leg(s) Change Identifier		-	
Departure Station	SIN	M	
Scheduled Time of Aircraft Departure (Aircraft STD)	0730	M	
Date Variation for STD	/0	C	If included, must begin with a slash (/) Specification of a zero value is optional
Scheduled Time of Passenger Departure (Passenger STD)	/0715	C	If included, must begin with a slash (/)
Separator (Space)	Space	M	Mandatory if the next element included
Arrival Station	KUL	M	
Scheduled Time of Aircraft Arrival (Aircraft STA)	0820	M	
Date Variation for STA	/0	C	If included, must begin with a slash (/) Specification of a zero value is optional
Scheduled Time of Passenger Arrival (Passenger STA)	/0835	C	If applicable If included, must begin with a slash (/)
The following data elements may be stated here if they have not already been stated under Flight Information, Period/Frequency Information or Equipment Information:			If stated, the data elements apply to this leg only
Joint Operation Airline Designators (DEI 1);			
Operating Airline Disclosure—Code Share (DEI 2)			
Aircraft Owner (DEI 3);			
Cockpit Crew Employer (DEI 4);			
Cabin Crew Employer (DEI 5);			
Onward Flight (DEI 6)			
Separator (Space)	Space	C	
Meal Service Note (DEI 7)	7/FB/YS	O	If required
End of line	<≡	M	

Data Element	Data Element Example	Status	Use and Explanatory Notes
Segment Information			If required, the information structure is either the Traffic Restriction Note or other optional/conditional Segment Information. *Additional Segment Information may be repeated on separate lines.*
Traffic Restriction Note (DEI 8)	QQQQQQ 8/Z/171/A	C	If applicable.
or			
Other Segment Information	QQQQQQ 50/QF123	C	If required
End of line	<≡	C	Mandatory if one of above elements included
For further Segment Information		C	If required, additional Segment Information may be repeated on separate lines
Sub-Message Supplementary Information		O	
Supplementary Information Indicator	SI	M	
Separator (Space)	Space	M	
Supplementary Information		M	Free Text
End of line	<≡	M	
Sub-Message Separation	//	C	Also used if Supplementary Information for Whole Message follows. *For more sub-messages, repeat from applicable Action Information.*
End of line	<≡	C	Mandatory if Sub-Message Separation included
Supplementary Information for Whole Message		O	
Supplementary Information Indicator	SI	M	
Separator (Space)	Space	M	
Supplementary Information		M	Free Text
End of line	<≡	M	

4.6.4 SKD–Schedule Update

The Schedule Update (SKD) Sub-Message is not usually a stand-alone message unless the whole Flight Designator is to be cancelled.

It is normally used in conjunction with its associated NEW sub-message.

Example:

```
SSM
LT
24MAY00144E003/REF 123/449
SKD XASM
LX544
12AUG 25SEP
```

→ *Refer to Section 4.7 for additional examples on the use of 'SKD'.*

Data Element	Data Element Example	Status	Use and Explanatory Notes
Message Heading			
Standard Message Identifier	SSM	M	
End of line	<≡	M	
Time Mode	LT	C	If data element not provided assume UTC
End of line	<≡	C	Mandatory if Time Mode included
Message Reference			
Message Sequence Reference	24MAY00144E003	C	Mandatory if linked to a previous SKD sub-message or if a long message is split into parts. The Data Element is composed of: Date of Message (nnaaa); Message Group Serial Number (nnnnn); Continuation/End Code (a); Message Serial Number (nnn).
Creator Reference	/REF 123/449	O	If included, must begin with a slash (/)
End of line	<≡	C	Mandatory if any of above elements included
Action Information			
Action Identifier	SKD	M	
Separator (Space)	Space	C	
ASM Withdrawal Indicator	XASM	C	
End of line	<≡	M	
Flight Information			
Flight Designator	LX544	M	
Operational Suffix		C	If applicable
End of line	<≡	M	

Data Element	Data Element Example	Status	Use and Explanatory Notes
Period/Frequency Information			
Schedule Validity Effective Date	12AUG	M	First date of operation. Year is Optional.
Separator (Space)	Space	C	Mandatory if the next element included
Schedule Validity Discontinue Date	25SEP	O	Last date of operation. Year is Optional.
End of line	<≡	M	
Sub-Message Supplementary Information		O	
Supplementary Information Indicator	SI	M	
Separator (Space)	Space	M	
Supplementary Information		M	Free Text
End of line	<≡	M	
Sub-Message Separation	//	C	Also used if Supplementary Information for Whole Message follows. *For more sub-messages, repeat from applicable Action Information.*
End of line	<≡	C	Mandatory if Sub-Message Separation included
Supplementary Information for Whole Message		O	
Supplementary Information Indicator	SI	M	
Separator (Space)	Space	M	
Supplementary Information		M	Free Text
End of line	<≡	M	

4.6.5 ACK–Acknowledgement

Example:

```
SSM
LT
17NOV00026E001/LY0005/21NOV
ACK
```

Data Element	Data Element Example	Status	Use and Explanatory Notes
Message Heading			
Standard Message Identifier	SSM	M	
End of line	<≡	M	
Time Mode	LT	C	If data element not provided assume UTC
End of line	<≡	C	Mandatory if Time Mode included
Message Reference			If used in the original SSM, the Message Reference line in the ACK sub-message should exactly match the Message Reference line sent in the original SSM
Message Sequence Reference	17NOV00026E001	C	Mandatory. The Data Element is composed of: Date of message (nnaaa); Message Group Serial Number (nnnnn); Continuation/End Code (a); Message Serial Number (nnn).
Creator Reference	/LY0005/21NOV	C	If included, must begin with a slash (/)
End of line	<≡	C	Mandatory if any of the above Included
Action Information			
Action Identifier	ACK	M	
End of line	<≡	M	

4.6.6 ADM–Change of Existing Information Expressed by the Use of Data Element Identifier Only

The Change of Existing Information expressed by the use of Data Element Identifier only (ADM) Sub-Message is also used to be able to delete existing information. In this case, the cancel code 'NIL' is used instead of the field information.

Example:

```
SSM
UTC
30JUL00916C003/REF 70/891
ADM
RG878A 1/RG/AV 3/AV 4/AV 5/RG 9/TP
12AUG 30SEP 1234567/W2 6/RG879A/1
GIG/BOG 7/CDC/YD
GIGBOG 8/Z/171/Q
QQQQQQ 121/NIL
```

Data Element	Data Element Example	Status	Use and Explanatory Notes
Message Heading			
Standard Message Identifier	SSM	M	
End of line	<≡	M	
Time Mode	UTC	C	If data element not provided assume UTC
End of line	<≡	C	Mandatory if Time Mode included
Message Reference			
Message Sequence Reference	30JUL00916C003	C	Mandatory if a long message is split into parts. The Data Element is composed of: Date of message (nnaaa); Message Group Serial Number (nnnnn); Continuation/End Code (a); Message Serial Number (nnn).
Creator Reference	/REF 70/891	O	If included, must begin with a slash (/)
End of line	<≡	C	Mandatory if any of above elements included
Action Information			
Action Identifier	ADM	M	
End of line	<≡	M	

Data Element	Data Element Example	Status	Use and Explanatory Notes
Flight Information			*Flight Information may be repeated on a separate line for different flights with identical data/information*
Flight Designator	RG878	M	
Operational Suffix	A	C	If applicable
Separator (Space)	Space	C	Mandatory if the next element included
Joint Operation Airline Designators (DEI 1)	1/RG/AV	C	If applicable, applies to all legs subsequently stated
Separator (Space)	Space	C	Mandatory if the next element included
Operating Airline Disclosure—Code Share (DEI 2)			If applicable, applies to all legs subsequently stated. Not applicable if Operating Airline Disclosure—Shared Airline or Wet Lease Designation (DEI 9) is stated below.
Separator (Space)	Space	C	Mandatory if the next element included
Aircraft Owner (DEI 3)	3/AV	C	If applicable, applies to all legs subsequently stated
Separator (Space)	Space	C	Mandatory if the next element included
Cockpit Crew Employer (DEI 4)	4/AV	C	If applicable, applies to all legs subsequently stated
Separator (Space)	Space	C	Mandatory if the next element included
Cabin Crew Employer (DEI 5)	5/RG	C	If applicable, applies to all legs subsequently stated
Separator (Space)	Space	C	Mandatory if the next element included
Operating Airline Disclosure—Shared Airline or Wet Lease Designation (DEI 9)	9/TP	C	If applicable, applies to all legs subsequently stated. Not applicable if Operating Airline Disclosure—Code Share (DEI 2) is stated above.
End of line	<≡	M	

Data Element	Data Element Example	Status	Use and Explanatory Notes
Period/Frequency Information			*Period/Frequency Information may be repeated on a separate line for different periods/frequencies with different information*
Period of Operation–From and To Dates	12AUG 30SEP	M	First date and Last date of Operation separated by a Space. Year is Optional in both dates.
Separator (Space)	Space	M	
Days of Operation	1234567	M	
Frequency Rate	/W2	C	If included, must begin with a slash (/)
The following data elements may be stated here if they have not already been stated under Flight Information:			If stated, the data elements apply for this period and frequency only
Joint Operation Airline Designators (DEI 1):			
Operating Airline Disclosure—Code Share (DEI 2)			
Aircraft Owner (DEI 3):			
Cockpit Crew Employer (DEI 4):			
Cabin Crew Employer (DEI 5)			
Separator (Space)	Space	C	Mandatory if the next element included
Onward Flight (DEI 6)	6/RG879A/1	O	Applies to the last leg of this flight for this period and frequency only. The composition of the data elements is stated under 'Period/Frequency Information'.
Separator (Space)	Space	C	Mandatory if the next element included
This data element may be stated here if it has not already been stated under Flight Information		C	If stated, the data element applies for this period and frequency only
Operating Airline Disclosure—Shared Airline or Wet Lease Designation (DEI 9)			
End of line	<≡	M	

Data Element	Data Element Example	Status	Use and Explanatory Notes
Routing or Leg Information			
Flight Leg(s) Change Identifier	GIG/BOG	C	If change to data elements stated below do not apply to entire routing
The following data elements may be stated here if they have not already been stated under Flight Information, Period/Frequency Information or Equipment Information:			If stated, the data elements apply to the leg(s) described by the Flight Leg(s) Change Identifier only
Joint Operation Airline Designators (DEI 1);			
Operating Airline Disclosure—Code Share (DEI 2)			
Aircraft Owner (DEI 3);			
Cockpit Crew Employer (DEI 4);			
Cabin Crew Employer (DEI 5);			
Onward Flight (DEI 6)			
Separator (Space)	Space	C	Mandatory if the next element included
Meal Service Note (DEI 7)	7/CDC/YD	O	If required
Separator (Space)	Space	C	Mandatory if the next element included
Operating Airline Disclosure—Shared Airline or Wet Lease Designation (DEI 9)		C	If stated, the data element applies to the leg(s) described by the Flight Leg(s) Change Identifier only
End of line	<≡	M	
Segment Information			This information structure is either the Traffic Restriction Note (if applicable) or other optional/conditional Segment Information. *Additional Segment Information may be repeated on separate lines.*
Traffic Restriction Note (DEI 8)	GIGBOG 8/Z/171/Q	C	If applicable.
or			
Other Segment Information	QQQQQQ 121/NIL	C	If applicable and if required
End of line	<≡	C	Mandatory if one of above elements included
Sub-Message Supplementary Information		O	
Supplementary Information Indicator	SI	M	
Separator (Space)	Space	M	
Supplementary Information		M	Free Text
End of line	<≡	M	

Data Element	Data Element Example	Status	Use and Explanatory Notes
Sub-Message Separation	//	C	Also used if Supplementary Information for Whole Message follows. *For more sub-messages, repeat from applicable Action Information.*
End of line	<≡	C	Mandatory if Sub-Message Separation included
Supplementary Information for Whole Message		O	
Supplementary Information Indicator	SI	M	
Separator (Space)	Space	M	
Supplementary Information		M	Free Text
End of line	<≡	M	

4.6.7 CON–Change of Aircraft Configuration/Version

Example:

```
SSM
LT
21DEC00191C007/REF 71/210
CON
MS855A 3/MS 4/BA 5/MS 9/WT
12AUG 30SEP 1234567/W2 6/MS856A/1
G 767 FY/FO.FCM
LOS/ABJ
QQQQQQ 910//SPARES PACK
```

Data Element	Data Element Example	Status	Use and Explanatory Notes
Message Heading			
Standard Message Identifier	SSM	M	
End of line	<≡	M	
Time Mode	LT	C	If data element not provided assume UTC
End of line	<≡	C	Mandatory if Time Mode included
Message Reference			
Message Sequence Reference	21DEC00/191C007	C	Mandatory if a long message is split into parts. The Data Element is composed of: Date of message (nnaaa); Message Group Serial Number (nnnnn); Continuation/End Code (a); Message Serial Number (nnn).

Data Element	Data Element Example	Status	Use and Explanatory Notes
Creator Reference	/REF 71/210	O	If included, must begin with a slash (/)
End of line	<≡	C	Mandatory if any of above elements included
Action Information			
Action Identifier	CON	M	
End of line	<≡	M	
Flight Information			*Flight Information may be repeated on a separate line for different flights with identical data/information*
Flight Designator	MS855	M	
Operational Suffix	A	C	If applicable
Operating Airline Disclosure—Code Share (DEI 2)		C	Not applicable if Operating Airline Disclosure—Shared Airline or Wet Lease Designation (DEI 9) is stated below.
Separator (Space)	Space	C	Mandatory if the next element included
Aircraft Owner (DEI 3)	3/MS	C	If applicable, applies to all legs subsequently stated
Separator (Space)	Space	C	Mandatory if the next element included
Cockpit Crew Employer (DEI 4)	4/BA	C	If applicable, applies to all legs subsequently stated
Separator (Space)	Space	C	Mandatory if the next element included
Cabin Crew Employer (DEI 5)	5/MS	C	If applicable, applies to all legs subsequently stated
Separator (Space)	Space	C	Mandatory if the next element included
Operating Airline Disclosure—Shared Airline or Wet Lease Designation (DEI 9)	9/WT	C	Not applicable if Operating Airline Disclosure—Code Share (DEI 2) is stated above
End of line	<≡	M	
Period/Frequency Information			*Period/Frequency Information may be repeated on a separate line for different periods/frequencies with different information*
Period of Operation–From and To Dates	12AUG 30SEP	M	First date and Last date of Operation separated by a Space. Year is Optional in both dates.
Separator (Space)	Space	M	
Days of Operation	1234567	M	
Frequency Rate	/W2	C	If included, must begin with a slash (/)

Data Element	Data Element Example	Status	Use and Explanatory Notes
The following data elements may be stated here if they have not already been stated under Flight Information:			If stated, the data elements apply for this period and frequency only
Operating Airline Disclosure—Code Share (DEI 2)			
Aircraft Owner (DEI 3);			
Cockpit Crew Employer (DEI 4);			
Cabin Crew Employer (DEI 5)			
Separator (Space)	`Space`	C	Mandatory if the next element included
Onward Flight (DEI 6)	`6/MS856A/1`	O	If applicable, applies to the last leg of this flight for this period and frequency only
Separator (Space)	`Space`	C	Mandatory if the next element included
This data element may be stated here if it has not already been stated under Flight Information:		C	If stated, the data element applies for this period and frequency only
Operating Airline Disclosure—Shared Airline or Wet Lease Designation (DEI 9)			
End of line	`<≡`	M	
Equipment Information			*For different information in different period/frequency, repeat Period/Frequency Information and Equipment Information on separate lines*
Service Type	`G`	M	
Separator (Space)	`Space`	M	
Aircraft Type	`767`	M	
Separator (Space)	`Space`	M	
Passenger Reservations Booking Designator	`FY`	C	If the Passenger Reservations Booking Designator is not stated, then the Aircraft Configuration/ Version must be stated
Passenger Reservations Booking Modifier	`/F0`	C	If applicable
Aircraft Configuration/Version	`.FCM`	C	If included, must start with a period (.).

Data Element	Data Element Example	Status	Use and Explanatory Notes
			If the Aircraft Configuration/Version is not stated then the Passenger Reservations Booking Designator must be stated
The following data elements may be stated here if they have not already been stated under Flight Information or Period/Frequency Information:			If stated, the data elements apply for this period and frequency only
Operating Airline Disclosure—Code Share (DEI 2)			
Aircraft Owner (DEI 3);			
Cockpit Crew Employer (DEI 4);			
Cabin Crew Employer (DEI 5);			
Onward Flight (DEI 6);			
Operating Airline Disclosure—Shared Airline or Wet Lease Designation (DEI 9)			
End of line	<≡	M	
Routing or Leg Information			
Flight Leg(s) Change Identifier	LOS/ABJ	C	Included if change does not apply to entire routing
End of line	<≡	C	Mandatory if Flight Leg(s) Change Identifier included
Segment Information			*Additional Segment Information may be repeated on separate lines*
Other Segment Information	QQQQQQ 910/SPARES PACK	C	If applicable. Only Data Element Identifiers 101–108, 113–115, 127, 800–999 are allowed.
End of line	<≡	C	Mandatory if Other Segment Information included
Sub-Message Supplementary Informatin		O	
Supplementary Information Indicator	SI	M	
Separator (Space)	Space	M	
Supplementary Information		M	Free Text
End of line	<≡	M	
Sub-Message Separation	//	C	Also used if Supplementary Information for Whole Message follows. *For more sub-messages, repeat from applicable Action Information.*
End of line	<≡	C	Mandatory if Sub-Message Separation included

Data Element	Data Element Example	Status	Use and Explanatory Notes
Supplementary Information for Whole Message		O	
Supplementary Information Indicator	SI	M	
Separator (Space)	Space	M	
Supplementary Information		M	Free Text
End of line	<≡	M	

4.6.8 EQT–Change of Equipment Information

Example:

```
SSM
LT
21DEC001191C007/REF 71/210
EQT
MS855A 3/DI 4/BA 5/BA 9/WT
12AUG 30SEP 1234567/W2 6/MS856A/1
G 767 FY/FO.FCM
LOS/ABJ
QQQQQQ 910/SPARES PACK
```

→ *Refer to Section 4.7 for additional examples on the use of 'EQT'.*

Data Element	Data Element Example	Status	Use and Explanatory Notes
Message Heading			
Standard Message Identifier	SSM	M	
End of line	<≡	M	
Time Mode	LT	C	If data element not provided assume UTC
End of line	<≡	C	Mandatory if Time Mode included
Message Reference			
Message Sequence Reference	21DEC001191C007	C	Mandatory if a long message is split into parts. The Data Element is composed of: Date of message (nnaaa); Message Group Serial Number (nnnnn); Continuation/End Code (a); Message Serial Number (nnn).
Creator Reference	/REF 71/210	O	If included, must begin with a slash (/)
End of line	<≡	C	Mandatory if any of above elements included

Data Element	Data Element Example	Status	Use and Explanatory Notes
Action Information			
Action Identifier	EQT	M	
End of line	<≡	M	
Flight Information			*Flight Information may be repeated on a separate line for different flights with identical information*
Flight Designator	MS855	M	
Operational Suffix	A	C	If applicable
Separator (Space)	Space	C	Mandatory if the next element included
Operating Airline Disclosure—Code Share (DEI 2)		C	Not applicable if Operating Airline Disclosure—Shared Airline or Wet Lease Designation (DEI 9) is stated below
Separator (Space)	Space	C	Mandatory if the next element included
Aircraft Owner (DEI 3)	3/DI	C	If applicable
Separator (Space)	Space	C	Mandatory if the next element included
Cockpit Crew Employer (DEI 4)	4/BA	C	If applicable
Separator (Space)	Space	C	Mandatory if the next element included
Cabin Crew Employer (DEI 5)	5/BA	C	If applicable
Separator (Space)	Space	C	Mandatory if the next element included
Operating Airline Disclosure—Shared Airline or Wet Lease Designation (DEI 9)	9/WT	C	Not applicable if Operating Airline Disclosure—Code Share (DEI 2) is stated above
End of line	<≡	M	
Period/Frequency Information			*Period/Frequency Information may be repeated on a separate line for different periods/frequencies with different information*
Period of Operation–From and To Dates	12AUG 30SEP	M	First date and Last date of Operation separated by a Space Year is Optional in both dates
Separator (Space)	Space	M	
Days of Operation	1234567	M	
Frequency Rate	/W2	C	If included, must begin with a slash (/)
The following data elements may be stated here if they have not already been stated under Flight Information:			If stated, the data elements apply for this period and frequency only

Data Element	Data Element Example	Status	Use and Explanatory Notes
Operating Airline Disclosure—Code Share (DEI 2)			
Aircraft Owner (DEI 3);			
Cockpit Crew Employer (DEI 4);			
Cabin Crew Employer (DEI 5)			
Onward Flight (DEI 6)	6/MS856A/1	O	If applicable, applies to the last leg of this flight for this period and frequency only
Separator (Space)	Space	C	Mandatory if the next element included
This data element may be stated here if it has not already been stated under Flight Information		C	If stated, the data element applies for this period and frequency only
Operating Airline Disclosure—Shared Airline or Wet Lease Designation (DEI 9)			
End of line	<≡	M	
Equipment Information			*Period/Frequency Information and Equipment Information may be repeated on separate lines for different information in a different period/frequency*
Service Type	G	M	
Separator (Space)	Space	M	
Aircraft Type	767	M	
Separator (Space)	Space	M	
Passenger Reservations Booking Designator	FY	C	If the Passenger Reservations Booking Designator is not stated, then the Aircraft Configuration/ Version must be stated
Passenger Reservations Booking Modifier	/FO	C	If included, must start with a slash (/)
Aircraft Configuration/Version	.FCM	C	If included, must start with a period (.).
			If the Aircraft Configuration/Version is not stated then the Passenger Reservations Booking Designator must be stated
The following data elements may be stated here if they have not already been stated under Flight Information or Period/Frequency Information:			If stated, the data elements apply for this period and frequency only

Data Element	Data Element Example	Status	Use and Explanatory Notes
Operating Airline Disclosure—Code Share (DEI 2)			
Aircraft Owner (DEI 3);			
Cockpit Crew Employer (DEI 4);			
Cabin Crew Employer (DEI 5);			
Onward Flight (DEI 6);			
Operating Airline Disclosure—Shared Airline or Wet Lease Designation (DEI 9)			
End of line	<≡	M	
Routing or Leg Information			
Flight Leg(s) Change Identifier	LOS/ABJ	C	Included if change does not apply to entire routing
End of line	<≡	C	Mandatory if Flight Leg(s) Change Identifier included
Segment Information			Additional Segment Information may be repeated on separate lines
Other Segment Information	QQQQQQ 910/SPARES PACK	C	If applicable. Only Data Element Identifiers 101–108, 113–115, 127, 800–999 are allowed.
End of line	<≡	C	Mandatory if Other Segment Information included
Sub-Message Supplementary Information		O	
Supplementary Information Indicator	SI	M	
Separator (Space)	Space	M	
Supplementary Information		M	Free Text
End of line	<≡	M	
Sub-Message Separation	//	C	Also used if Supplementary Information for Whole Message follows. *For more sub-messages, repeat from applicable Action Information.*
End of line	<≡	C	Mandatory if Sub-Message Separation included
Supplementary Information for Whole Message		O	
Supplementary Information Indicator	SI	M	
Separator (Space)	Space	M	
Supplementary Information		M	Free Text
End of line	<≡	M	

4.6.9 FLT–Change of Flight Designator

Example:

```
SSM
UTC
21OCT00033E001/REF901/22
FLT
GF184A
01JUL 30SEP 67/W2
GF186A
DHAMCT 122/184
```

Data Element	Data Element Example	Status	Use and Explanatory Notes
Message Heading			
Standard Message Identifier	SSM	M	
End of line	<≡	M	
Time Mode	UTC	C	If data element not provided assume UTC
End of line	<≡	C	Mandatory if Time Mode included
Message Reference			
Message Sequence Reference	21OCT00033E001	C	Mandatory if a long message is split into parts. The Data Element is composed of: Date of message (nnaaa); Message Group Serial Number (nnnnn); Continuation/End Code (a); Message Serial Number (nnn).
Creator Reference	/REF901/22	O	If included, must begin with a slash (/)
End of line	<≡	C	Mandatory if any of above elements included
Action Information			
Action Identifier	FLT	M	
End of line	<≡	M	
Flight Information			
Flight Designator	GF184	M	
Operational Suffix	A	C	If applicable
End of line	<≡	M	

Data Element	Data Element Example	Status	Use and Explanatory Notes
Period/Frequency Information			*Period/Frequency Information may be repeated on a separate line for different periods/frequencies with different information*
Period of Operation–From and To Dates	01JUL 30SEP	M	First date and Last date of Operation separated by a Space. Year is Optional in both dates.
Separator (Space)	Space	M	
Days of Operation	67	M	
Frequency Rate	/W2	C	If included, must begin with a slash (/)
End of line	<≡	M	
New Flight information			
Flight Designator	GF186	M	
Operational Suffix	A	C	If applicable
End of line	<≡	M	
Segment Information			Additional Segment Information may be repeated on separate lines
Other Segment Information	DHAMCT 122/184	C	If applicable. Only Data Element Identifiers 10, 50, 122, 800–999 are allowed.
End of line	<≡	C	Mandatory if Other Segment Information included
Sub-Message Supplementary Information		O	
Supplementary Information Indicator	SI	M	
Separator (Space)	Space	M	
Supplementary Information		M	Free Text
End of line	<≡	M	
Sub-Message Separation	//	C	Applicable if more sub-messages are required or if Supplementary Information for Whole Message follows. *For more sub-messages, repeat from applicable Action Information.*
End of line	<≡	C	Mandatory if Sub-Message Separation included
Supplementary Information for Whole Message		O	
Supplementary Information Indicator	SI	M	
Separator (Space)	Space	M	
Supplementary Information		M	Free Text
End of line	<≡	M	

4.6.10 NAC–Not Actioned

Example:

```
SSM
LT
17NOV00026E001/LY0005/21NOV
NAC
004 AIRCRAFT TYPE INVALID
006 TIME INVALID
LONABCR
.FRASPLH 17054NOV01
```

```
SSM
LT
17NOV00026E001/LY0005/21NOV
NEW
IC953
01JUN00 30SEP00 26
J 32T DW
BLR0045 MAA0130 7//S
MAA0625 KUL+820 7//S
MAAKUL 99/2
```

Data Element	Data Element Example	Status	Use and Explanatory Notes
Message Heading			
Standard Message Identifier	SSM	M	
End of line	<≡	M	
Time Mode	LT	C	If data element not provided assume UTC
End of line	<≡	C	Mandatory if Time Mode included
Message Reference			If used in the original SSM, the Message Reference line in the NAC sub-message should exactly match the Message Reference line sent in the original SSM
Message Sequence Reference	17NOV00026E001	C	Mandatory. The Data Element is composed of: Date of message (nnaaa); Message Group Serial Number (nnnnn); Continuation/End Code (a); Message Serial Number (nnn).
Creator Reference	/LY0005/21NOV	C	If included, must begin with a slash (/)
End of line	<≡	C	Included if any of the above included

Data Element	Data Element Example	Status	Use and Explanatory Notes
Action Information			
Action Identifier	NAC	M	
End of line	<≡	M	
Reject Information			May be repeated as necessary
Blank Line Separator	<≡	M	
Error Line (First)	004	M	Line number on which the error was found. The line number 000 applies when the error found is not related to a specific line in the message received. The line count starts at the first mandatory line (i.e. the Action Identifier) in the repeated message or sub-message originally received.
Separator (Space)	Space	M	
Reject Reason (First)	AIRCRAFT TYPE INVALID	M	Maximum of 1 line of error text per error line
End of line	<≡	M	
Error Line (Other)	006	O	Line number on which the error was found. The line number 000 applies when the error found is not related to a specific line in the message received. The line count starts at the first mandatory line (i.e. the Action Identifier) in the repeated message or sub-message originally received.
Separator (Space)	Space	C	Mandatory if Reject Reason (Other) included
Reject Reason (Other)	TIME INVALID	C	
End of line	<≡	C	Mandatory if Reject Reason (Other) included
Other Errors		C	If required, repeat from Error Line (Other)
Repeat of Rejected Message			
Blank Line Separator	<≡	M	
Message Lines before Action Identifier		O	Optional Message Information prior to Action Identifier Data structure is:
	LONABCR		Message Address
	.FRASPLH		Message Originator and Time Stamp
	170540NOV01		

Data Element	Data Element Example	Status	Use and Explanatory Notes
	SSM		Standard Message Identifier
	LT		Time mode (if data element not provided assume UTC)
	17NOV00026E001 /LY0005/21NOV		Message Reference
Message Lines from Action Identifier	NEW	M	Action Information
	IC953		Flight Information
	01JUN00 30SEP00 26		Period/Frequency Information
	J 32T DW		Equipment Information
	BLR0045 MAA0130 7//S		Routing or Leg Information
	MAA0625 KUL0820 7//S		
	MAAKUL 99/2		Segment Information
End of line	<≡	M	

4.6.11 REV–Revision of Period of Operation and/or Day(s) of Operation

Example:

```
SSM
UTC
13JUN00901E002/REF 150/212
REV
AI122E 12AUG3 0SEP 2/W2
01JUL 30SEP 5/W2
```

Data Element	Data Element Example	Status	Use and Explanatory Notes
Message Heading			
Standard Message Identifier	SSM	M	
End of Line	<≡	M	
Time Mode	UTC	C	If data element not provided assume UTC
End of Line	<≡	C	Mandatory If Time Mode included
Message Reference			
Message Sequence Reference	13JUN00901E002	C	Mandatory if a long message is split into parts. The Data Element is composed of: Date of message (nnaaa); Message Group Serial Number (nnnnn); Continuation/End Code (a); Message Serial Number (nnn).

Data Element	Data Element Example	Status	Use and Explanatory Notes
Creator Reference	/REF 150/212	O	If included, must begin with a slash (/)
End of line	<≡	C	Mandatory if any of above elements included
Action Information			
Action Identifier	REV	M	
End of line	<≡	M	
Flight Information			
Flight Designator	AI122	M	
Operational Suffix	E	C	If applicable
Separator (Space)	Space	M	
Existing period of operation– From and To Dates	12AUG 30SEP	M	First date and Last date of Existing Schedule separated by a Space. Year is Optional in both dates.
Separator (Space)	Space	M	
Existing Day(s) of Operation	2	M	
Existing Frequency Rate	/W2	C	If included, must begin with a slash (/)
End of line	<≡	M	
Period/Frequency Information			*Period/Frequency Information may be repeated on a separate line for different periods/frequencies with different information*
Revised Period of Operation– From and To Dates	01JUL30SEP	M	First date and Last date of Operation of the revised schedule separated by a Space. Year is Optional in both dates.
Separator (Space)	Space	M	
Revised Days of Operation	5	M	
Revised Frequency Rate	/W2	C	If included, must begin with a slash (/)
End of line	<≡	M	
Sub-Message Supplementary Information		O	
Supplementary Information Indicator	SI	M	
Separator (Space)	Space	M	
Supplementary Information		M	Free Text
End of line	<≡	M	
Sub-Message Separation	//	C	Also used if Supplementary Information for Whole Message follows. *For more sub-messages, repeat from applicable Action Information.*
End of line	<≡	C	Mandatory if Sub-Message Separation included

Data Element	Data Element Example	Status	Use and Explanatory Notes
Supplementary Information for Whole Message		O	
Supplementary Information Indicator	SI	M	
Separator (Space)	Space	M	
Supplementary Information		M	Free Text
End of line	<≡	M	

4.6.12 RSD–Request for Schedule Data

Example:

```
SSM
LT
/REF 123/449
RSD
AC874
12AUG 25SEP
```

Data Element	Data Element Example	Status	Use and Explanatory Notes
Message Heading			
Standard Message Identifier	SSM	M	
End of Line	<≡	M	
Time Mode	LT	C	If data element not provided assume UTC
End of Line	<≡	C	Mandatory if Time Mode included
Message Reference			
Message Sequence Reference		-	Not required as RSD is a unique sub-message
Creator Reference	/REF 123/449	O	If included, must begin with a slash (/)
End of line	<≡	C	Mandatory if Creator Reference Included
Action Information			
Action Identifier	RSD	M	
End of line	<≡	M	
Flight Information			*Flight Information may be repeated on a separate line for different flights with identical Periods/Frequency Information*
Flight Designator	AC874	M	
End of line	<≡	M	

Data Element	Data Element Example	Status	Use and Explanatory Notes
Period/Frequency Information			
Schedule Validity Effective Date	12AUG	M	Year is Optional
Separator (Space)	Space	C	Mandatory if the next element included
Schedule Validity Discontinue Date	25SEP	O	Year is Optional
End of line	<≡	M	
Sub-Message Supplementary Information		O	
Supplementary Information Indicator	SI	M	
Separator (Space)	Space	M	
Supplementary Information		M	Free Text
End of line	<≡	M	
Sub-Message Separation	//	C	Also used if Supplementary Information for Whole Message follows. *For more sub-messages, repeat from applicable Action Information.*
End of line	<≡	C	Mandatory if Sub-Message Separation included
Supplementary Information for Whole Message		O	
Supplementary Information Indicator	SI	M	
Separator (Space)	Space	M	
Supplementary Information		M	Free Text
End of line	<≡	M	

4.6.13 TIM–Change of Time Information

Example:

```
SSM
LT
13JAN00033E002/REF 910/33
TIM
CX100B
12AUG 30SEP 1234567/W2
BNE1010/1000 HKG1955/2005 7/PLD/CLD/YLD
BNEHKG 810/IN FLIGHT MOVIE
```

Data Element	Data Element Example	Status	Use and Explanatory Notes
Message Heading			
Standard Message Identifier	SSM	M	
End of line	<≡	M	
Time Mode	LT	C	If data element not provided assume UTC
End of line	<≡	C	Mandatory if Time Mode included
Message Reference			
Message Sequence Reference	13JAN00033E002	C	Mandatory if a long message is split into parts. The Data Element is composed of: Date of message (nnaaa); Message Group Serial Number (nnnnn); Continuation/End Code (a); Message Serial Number (nnn).
Creator Reference	/REF 910/33	O	If included, must begin with a slash (/)
End of line	<≡	C	Mandatory if any of above elements included
Action Information			
Action Identifier	TIM	M	
End of line	<≡	M	
Flight Information			
Flight Designator	CX100	M	
Operational Suffix	B	C	If applicable
End of line	<≡	M	

Data Element	Data Element Example	Status	Use and Explanatory Notes
Period/Frequency Information			*Period/Frequency Information may be repeated on a separate line for different periods/frequencies with different information*
Period of Operation–From and To Dates	12AUG 30SEP	M	First date and Last date of Operation separated by a Space Year is Optional in both dates
Separator (Space)	Space	M	
Days of Operation	1234567	M	
Frequency Rate	/W2	C	If included, must begin with a slash (/)
End of line	<≡	M	
Routing or Leg Information			*Routing or Leg Information may be repeated on a separate line for the next leg/group of consecutive legs*
Departure Station	BNE	M	
Scheduled Time of Aircraft Departure (Aircraft STD)	1010	M	
Date Variation for STD		C	If included, must begin with a slash (/) Specification of a zero value is optional
Scheduled Time of Passenger Departure (Passenger STD)	/1000	C	If included, must begin with a slash (/)
Separator (Space)	Space	M	Mandatory if the next element included
Arrival Station	HKG	M	
Scheduled Time of Aircraft Arrival (Aircraft)	1955	M	
Date Variation for STA		C	If included, must begin with a slash (/) Specification of a zero value is optional
Scheduled Time of Passenger Arrival (Passenger STA)	/2005	C	If included, must begin with a slash (/)
Separator (Space)	Space	C	Mandatory if the next element included
Meal Service Note (DEI 7)	7/PLD/CLD/YLD	O	If required
End of line	<≡	M	

Data Element	Data Element Example	Status	Use and Explanatory Notes
Segment Information			*Additional Segment Information may be repeated on separate line*
Other Segment Information	`BNEHKG 810/IN FLIGHT MOVIE`	C	If applicable. Only Data Element Identifiers 97, and 800–999 are allowed.
End of line	<≡	C	Mandatory if Other Segment Information included
Sub-Message Supplementary Information		O	
Supplementary Information Indicator	`SI`	M	
Separator (Space)	`Space`	M	
Supplementary Information		M	Free Text
End of line	<≡	M	
Sub-Message Separation	`//`	C	Also used if Supplementary Information for Whole Message follows *For more sub-messages, repeat from applicable Action Information*
End of line	<≡	C	Mandatory if Sub-Message Separation included
Supplementary Information for Whole Message		O	
Supplementary Information Indicator	`SI`	M	
Separator (Space)	`Space`	M	
Supplementary Information		M	Free Text
End of line	<≡	M	

4.7 Additional Message Examples

4.7.1 NEW–Insertion of New Flight Information

Example of Meal Service note with more than 5 classes and with a repetition of DEI 109:

```
.QD FABABCR
.QVISCAF 091056
SSM
LT
09OCT00531E001/
NEW
BA2268
01DEC08 24JAN09 12345
J 320 CDZFYSBRKVLUMHQAWTENI.C22Y132
CDG1320 MAN1350 7/XX
CDGMAN 10/AZ3538/UX3503
CDGMAN 98/2
CDGMAN 99/2E
CDGMAN 109/CM/DM/ZM/FM/YM/SM/BM/RS/KS/VS/LS/US/MS/HS/QS/AS
CDGMAN 109/WS/TS/ES/NS/IS
CDGMAN 503/9
CDGMAN 505/ET
```

Example of Period/Frequency Information repetition:

```
SSM
LT
24MAY00144E003/REF 123/449
NEW
LX600
12AUG 30SEP 1234567
01OCT 21OCT 135
G M80 FCYML/FNCN.FCM
GVA1830 FRA1945
```

Example of repetition where Equipment Information varies by Period/Frequency:

```
SSM
LT
24MAY00144E003/REF 123/449
NEW
LX600
12AUG 30SEP 12345
J M80 FCYML.FCM
12AUG 30SEP 67
J 320 FCYML.FCM
GVA1830 FRA1945
```

Example of repetition of Routing/Leg Information (multi-leg flight):

```
SSM
LT
24MAY00144E003/REF 123/449
NEW
LX600
12AUG 30SEP 1234567
J M80 FCYML.FCM
GVA1830 FRA1945
FRA2030 HAM2130
```

Example of repetition where Equipment Information varies by leg:

```
SSM
LT
24MAY00144E003/REF 123/449
NEW
LX600
12AUG 30SEP 1234567
J M80 FCYML.F10C30M75
GVA1830 FRA1945
J 320 FCYMKLQV.F10C30M75
FRA2030 HAM 2130
GVAHAM 101/FCYMKL
```

Example of use of Aircraft Configuration/Version only (no PRBD):

```
SSM
LT
24MAY01144E003/REF 123/449
NEW
LX2429
02JUN 16JUN 6
C 320 .Y150VVLX320
HEL1615 ZRH1800

SSM
LT
24MAY01144E003/REF 123/449
NEW
LX2429
02JUN 16JUN 6
Q 320 .F32Y200K93PP20
HEL1615 ZRH1800
```

```
SSM
LT
24MAY01144E003/REF 123/449
NEW
LH8015
02JUN 16JUN 6
F 320 .PP10
HEL1615 FRA1800

SSM
LT
24MAY01144E003/REF 123/449
NEW
LX3549
02JUN 16JUN 6
J 320 .F014Y119VVT3M33
ARN1615 ZRH1800

SSM
LT
24MAY01144E003/REF 123/449
NEW COMM
LX2429
12JUN 24JUN 7
C 320 .PPVVT3M33
HEL1615 ZRH1800
```

Example of multiple leg flight with a day change:

```
SSM
LT
28OCT15781E001
NEW
LX182
06NOV03 25MAR04 14
J 343 FJCDYSMLHNKBV.FCYVV343S1
ZRH2215 BKK1430/1
BKK1530/1 SIN1845/1
```

4.7.2 CNL–Cancellation

Example of Repetition of Flight Information:

```
SSM
UTC
13JUN00901E002/REF 150/212
CNL XASM
AA407P
AA408
12AUG 30SEP 1234567/W2
```

4.7.3 SKD–Schedule Update Message

Example where Period in SKD is identical to Period of NEW:

```
SSM
LT
08OCT32948E001
SKD XASM
LX1249
28MAR04 30OCT04
//
NEW XASM
LX1249 3/LX 4/LX 5/LX
28MAR04 30OCT04 1234567
J AR1 JCDIYSMLHNKBVQWOU.CYVVAR1S97
ARN1350 ZRH1630 7/JL/CL/DL/IL//F
ARNZRH 10/AY6399
ARNZRH 99/2
ARNZRH 503/9
ARNZRH 505/ET
```

Example where period in SKD is larger than period of NEW:

```
SSM
LT
08OCT36863E001
SKD XASM
LX1579
26OCT03 27MAR04
//
NEW XASM
LX1579 3/LX 4/LX 5/LX
26OCT03 24DEC03 1234567
J ER4 YSMLHNKBVQWOU.YVVER4T49
VIE1455 ZRH1625 7//F
VIEZRH 503/9
VIEZRH 505/ET
```

4.7.4 EQT–Change of Equipment Information

Example of use of Aircraft Configuration/Version only (no PRBD or Number of Seats):

```
SSM
LT
24MAY01144E003/REF 123/449
EQT
LX2429
02JUN 16JUN 6
C 320 CYVVLX320
```

Example of Routing or Leg Information repetition:

```
SSM
LT
02MAY07111E001/REF 123/000
EQT
AN007
15MAY07 30SEP07 123
J 752 FCYM
LTN/EDI
J 763 FCYM
EDI/AMS
J 737 FCYM
```

Example of repetition where Equipment Information varies by Period/Frequency:

```
SSM
LT
13FEB00029E001/006718-IB0958/13FEB
EQT
IB958
01DEC10 15DEC10 5
J 340 CAJDIZYBHKMLVSNPQOR
16DEC10 31DEC10 5
J 342 CAJDIZYBHKMLVSNPQOR
```

4.7.5 TIM–Change of Time Information

Example of multiple leg flight with day change and midnight departure:

```
SSM
UTC
12MAR30017E001
TIM
SN206
30MAR04 26OCT04 2
CKY2155 DKR2315
DKR0000/1 BRU0600/1
```

CHAPTER 5–AD HOC SCHEDULES MESSAGE PROCEDURE

5.1 INTRODUCTION

5.2 PRINCIPLES AND RULES

5.3 MESSAGE STANDARDS

5.3.1 Introduction
5.3.2 Security of Message Exchanges
5.3.3 ASM Composition

5.4 ASM ACTION SUB-MESSAGES

NEW Insertion of New Flight Information
CNL Cancellation
RIN Reinstatement
RPL Replacement of Existing Flight Information

ACK Acknowledgement
ADM Change of Existing Information Expressed by the Use of Data Element Identifier Only
CON Change of Aircraft Configuration/Version
EQT Change of Equipment Information
FLT Change of Flight Identifier
NAC Not Actioned
RRT Change of Routing
TIM Change of Time Information

5.5 TECHNICAL SPECIFICATION

5.6 TECHNICAL MESSAGE SPECIFICATION

5.6.1 ASM Message Specification

5.7 SSM SUB-MESSAGE DEFINITION

5.7.1 NEW–Insertion of New Flight Information
5.7.2 CNL–Cancellation
5.7.3 RIN–Reinstatement
5.7.4 RPL–Replacement of Existing Flight Information

5.7.5 ACK–Acknowledgement
5.7.6 ADM–Change of Existing Information Expressed by the Use of Data Element Identifier Only
5.7.7 CON–Change of Aircraft Configuration/Version
5.7.8 EQT–Change of Equipment Information
5.7.9 FLT–Change of Flight Identifier

5.7.10 NAC–Not Actioned
5.7.11 RRT–Change of Routing
5.7.12 TIM–Change of Time Information

5.8 ADDITIONAL MESSAGE EXAMPLES
5.8.1 NEW–Insertion of New Flight Information
5.8.2 CNL–Cancellation
5.8.3 EQT–Change of Equipment Information
5.8.4 TIM–Change of Time Information

5.1 Introduction

In order to allow all airlines to electronically exchange information on a deviation from their basic schedule, standard message formats have been agreed. These formats also allow the airlines to submit these amendments to schedule aggregators.

The message formats have been designed to provide as much clarity as possible for the message users and the received message details can be processed either by computer or by manual methods.

Deviations from the basic schedules, such as an addition of a supplementary or an extra flight, change to a single operation of an existing flight in routing, timing, equipment or other data and cancellation of a flight are transmitted using the Ad-Hoc Schedules Message (ASM).

A message may consist of one or more Action sub-messages. Each sub-message will have its own Action Identifier to identify a specific change being made to the basic schedule.

The rules for the use and composition of this message, together with detailed specifications and examples, are explained in the following Sections of this Chapter.

Amendments to the basic schedule may be transmitted in the Standard Schedule Message (SSM). The rules for the use and composition of this message, together with detailed specifications and examples, are explained in Chapter 4.

The Ad-Hoc Schedules Message (ASM) forms part of a complex system of timetable information exchange. The design of the message is based on the philosophy that a flight is recognised by the Flight Identifier, i.e. the combination of the Flight Designator and the Flight Identifier Date.

The ASM applies to long term ad-hoc modifications of schedules (generally resulting from schedules or operational planning) as well as short-term operational decisions that affect flight schedules.

For reporting of operational events, such as delays and actual movements not affecting schedules, reference should be made to the procedures defined in the IATA Airport Handling Manual (AHM).

In order to facilitate industry-wide acceptance of these standards, a range of optional features is included to ensure complete compatibility with the standards set in Chapter 7 for the exchange of computerized schedules and with the Standard Schedules Message set in Chapter 4.

These optional features include such items as the use of local dates and times, leg and segment oriented traffic and sales information.

5.2 Principles and Rules

In order to ensure full interline exchangeability, it is strongly recommended that airlines adhere to the rules for the construction of the standard messages as described in this Chapter.

The common rules for the data elements as described in Chapter 2 of this Manual should also be followed.

- The ASM exchange usually takes place on the basis of bilateral understanding.
- The ASM may be issued at any time prior to the actual departure from the station concerned. It shall be regarded as a firm amendment to the basic schedules except for punctuality rules that may vary from airline to airline.
- The addressees of the ASM are selected at the originator's discretion and will normally be limited to the parties directly concerned.
- Any schedules or changes advised by ASM cannot be modified by subsequent computerized schedule data sets or SSM (unless the ASM Withdrawal Indicator has been used).

  A facility exists, however, to withdraw an ASM modification by re-establishing the original flight data or status with the appropriate action identifier and with a special Change Reason Code (RTNS).

- Any bilaterally agreed use of local dates and times must be based on the current information in SSIM Appendix F and any updates to it by message.

  If the relation used is different or doubtful, it should be stated using Data Element Identifier 97 (UTC/Local Time Variation Specification).
- If a Flight Leg(s) Change Identifier in a sub-message does not match the routing of the flight(s) being changed, that sub-message may be ignored by the recipient.
- If a Segment on a line of a sub-message does not match a Segment of the flight(s) being changed, that line of the sub-message may be ignored by the recipient.

  If a change or cancellation is received where the period and/or days of operation to be changed/cancelled do not match those stored, or a new flight is added that is already stored, it is recommended that the correct schedule information should be requested from the sender, e.g. by use of SSM/RSD.
- The ACK/NAC exchange takes place on the basis of bilateral agreement.
- It is assumed that it is the responsibility of the ASM sender to ensure that they receive an ACK or a NAC and take the appropriate action if not.

5.3 Message Standards

5.3.1 Introduction

The technical specifications for message construction are based on the guidelines of the A4A/IATA Systems and Communications Reference Manuals (SCR). The SCR volumes are made available within the PADIS extranet site: www.iata.org/padis.

The standard message is enclosed within the standard communications “envelope”, i.e. signal identifiers, serial number, priority, address, originator and date/time of transmission.

The message will then read line by line by always starting at the left, i.e. left justified. For Type B messages, the maximum line length of the message must not exceed 69 printable characters including spaces. Some systems may restrict line length limits to less than 69 characters.

Although the Systems and Communications Reference Manual defines the maximum number of characters for one telegragh (Type B) message as 3,840, some service providers have the capability to increase this limit to 64,000 characters.

Type B users are, however, cautioned that some systems may not be able to receive or process messages with more than 3,840 characters.

This maximum length limitation takes into account all printed and non-printed characters, such as letter shifts, figure shifts and new line.

In the extreme case of a Flight, Aircraft or Leg Information line overflow, the excess elements should be stated on an additional line immediately following and must start with a Data Element Identifier.

When the message limit is exceeded, messages must be broken into separate parts with a Break between two sub-messages. Use can be made of the Message Sequence Reference to connect the related parts of the total message.

5.3.2 Security of Message Exchanges

To secure the exchange of ASMs between computers, it is recommended that the following techniques be used:

- Sequence all ASMs using the Message Sequence Reference;
- Process all ASMs in the same order as they are produced, according to the Message Sequence Reference;

- Request the re-transmission of a missing ASM using a “REPEAT” message:

  ASM

  REP

  ‹Message Sequence Reference›

  An “REP” message is sent by the receiver to inform the sender that a message has not been received. The ASM originator will identify the missing message by its Message Sequence Reference and will re-transmit the original message identified with original Message Sequence Reference and with the same data content.
- Inform the receiver of the last message sent within the current date of issue using an “END” message:

  ASM

  REP

  ‹Message Sequence Reference›

  The “END” message is designed to close the current sequence of messages before opening another one. It will allow recovery with an “REP” of the last message of the current sequence if this message has not been received. The Message Group Serial Number of the “END” message will be the previous Message Group Serial Number incremented by 1. The “END” message is unique for each date of issue.

5.3.3 ASM Composition

Each ASM message consists of consists of 5 major components:

- Message address/originator in accordance with communications instructions;
- Message Header including the Ad-Hoc Schedules Message Identifier (ASM), the Time Mode and an optional Creator Reference;
- One or more Action Sub-Messages that always include one or two the Action Identifiers, the flight identification and appropriate data elements, and always ends with a Sub-Message separator;
- An optional Supplementary Information Sub-Message applicable to the whole message;
- Message End in accordance with communications instructions.

The ASM Action Sub-messages are defined in Section 5.4.

The general technical specifications for ASM message construction are defined in Section 5.5.

The ASM Action Sub-Message composition and examples are defined in Section 5.6.

5.4 ASM Action Sub-Messages

The ASM Action Sub-Messages are an integral part of the ASM.

The following action sub-messages can be used in the composition of an ASM message.

→ *For further guidance, see also Appendix H: Ad Hoc Schedules Messages in the Operations Control Environment*.

NEW **Insertion of New Flight Information**

This sub-message inserts a new flight defined by a Flight Identifier that has previously not existed or had been cancelled.

CNL **Cancellation**

This sub-message cancels (i.e. declares as not operating), but retains as part of the basic schedule, one or more flights or parts of flight(s) defined by the Flight Identifier(s) (and Flight Leg Change Identifier, if applicable).

It is recommended that the facility to cancel part of a flight (using ASM/CNL with a Flight Leg Change Identifier) is confined to the operational phase of the flight only since a partial cancellation may lead to a Flight Designator duplication problem if the first leg or a middle leg of a flight is cancelled.

Partial cancellations would normally be communicated unambiguously using ASM/RPL.

RIN **Reinstatement**

This sub-message reinstates (i.e. declares as now operating again in the form and with the data in existence prior to the issuance of the last appropriate ASM/CNL messages) one or more flights or parts of the routing defined by Flight Identifier(s) and previously cancelled by an ASM/CNL sub-message.

Any subsequent changes to the flight (e.g. routing, times, equipment) must be handled by an appropriate sub-message.

RPL **Replacement of Existing Flight Information**

This sub-message replaces all information pertaining to an existing flight defined by a Flight Identifier by the new information.

If only specific information has to be replaced, the following Action Identifiers can be used instead of the complete RPL message.

ACK **Acknowledgement**

This sub-message advises the sender that the message content has been accepted by the receiving system and has been ***successfully processed***.

It is recommended that ACK messages are not sent when the message first arrives with the recipient—but when the message has been successfully passed through the recipients system and processed correctly.

ADM **Change of Existing Information Expressed by the Use of Data Element Identifier Only**

For a specific Flight designator/Period of Operation and day(s) of Operation this sub message changes only those data elements which are specified by the use of a Data Element Identifier.

- Other Periods of Operation/Day(s) of Operation remain unchanged
- When cancelling existing information the statement 'NIL' must be made
- If changes are leg related, replacement data need only be transmitted for legs where the data has changed. For example, in the case of Data Element Identifier 10, it is not necessary to transmit all legs that have Data Element Identifier 10 information, only those legs where DEI 10 needs changing

Note: *When using multiple Action Identifiers, all formats for the combinations and, therefore, processing rules, are determined by the primary Action Identifier*.
Qualifying as secondary Action Identifiers are those that form a subset of the primary Action Identifier.
Combinations with conflicting formats are not permitted, e.g. TIM-EQT. The secondary Action Identifier is intended for information purposes only i.e. human reading and understanding of changes.
Consequently, the following combinations are permitted:

Primary	*Secondary*
RPL	*ADM/CON/EQT/RRT/TIM*
CON	*ADM*
EQT	ADM/CON
RRT	ADM/CON/EQT/TIM
TIM	ADM

No combinations are permitted with NEW/CNL/RIN/FLT/ADM.

CON **Change of Aircraft Configuration/Version**

For a specific Flight designator/Period of Operation and day(s) of Operation this sub message changes only the Aircraft configuration Version information and/or the conditional data elements (if supplied) that can be transmitted in this type of message.

- Other Periods of Operation/Day(s) of Operation remain unchanged
- Data Elements previously transmitted and therefore already held in a recipients system and not included in the message remain unchanged

EQT **Change of Equipment Information**

For a specific Flight designator/Period of Operation and day(s) of Operation this sub message changes only the Equipment information and/or the conditional data elements (if supplied) that can be transmitted in this type of message.

- Other Periods of Operation/Day(s) of Operation remain unchanged
- Data Elements previously transmitted and therefore already held in a recipients system and not included in the message remain unchanged

FLT **Change of Flight Identifier**

This sub-message only changes the Flight Designator (and its associated data elements), and/or the Operational Suffix, for the Flight Identifier Date (and part of the routing, if stated). Other data elements, dates, and parts of the routing of the original Flight Designator and Operational Suffix are not affected.

NAC **Not Actioned**

This sub-message advises the sender of the original message that the message content has not been successfully processed in the recipients system. The NAC message will contain a text message that explains the reason for the error and include the line number(s) in the message where the error has occurred.

It is recommended that, for a format error only, one reason for the error is displayed. Format errors are likely to cause a corrupted message that cannot be validated further.

For a validation error, some receiving systems may advise when more than one validation error has occurred.

Users are advised to research the complete message before re-sending the message.

A list of error messages currently in use and their text structure can be found in Appendix E.

RRT **Change of Routing**

This sub-message changes only routing information (and its associated data elements) of a flight defined by a Flight Identifier.

The new routing must contain at least one Station from the previous routing. Stations common to both the previous and the new routings must appear in the same sequence.

The new routing, including timings, must be stated for all uncompleted legs of the flight. In order to avoid ambiguity regarding operational flights or flights scheduled to be in the operational phase, the Flight Leg(s) Change Identifier must be used to identify the flight leg(s) to be replaced by the schedule stated in the RRT message. If any of the above rules cannot be met then RPL must be used. For planning purposes, it is recommended that RPL be used.

TIM **Change of Time Information**

For a specific Flight designator/Period of Operation and day(s) of Operation this sub message changes only the Timing information and/or the conditional data elements (if supplied) that can be transmitted in this type of message.

- Other Periods of Operation/Day(s) of Operation remain unchanged
- Data Elements previously transmitted and therefore already held in a recipients system and not included in the message remain unchanged

5.5 Technical Specification

The following describes the logical structure of the ASM giving the status and format description for each data element.

Further reference should be made to Chapter 2 for detailed description of the data elements.

Where two Action Identifiers have been used, the status of the data element shall be the greater of the two specified in the technical specification, i.e.

- if either is Mandatory, it shall be Mandatory;
- if either is Conditional, and neither is Mandatory, it shall be Conditional;
- if neither is Mandatory or Conditional, and either is Optional, it shall be Optional.

Data expressed by Data Element Identifiers in connection with all Action Identifiers except NEW, CNL, RPL remain unchanged from previously supplied data.

Where desired, removal of such data is achieved by specification of text "`NIL`" using Action Identifier ADM.

5.6 Technical Message Specification

The logical structure (i.e. message specification) for the ASM is defined in the table below and includes the status, format description and example for each data element.

Reference should be made to the Data Element Glossary in Chapter 2 (Section 2.6) for the exact composition and detailed descriptions of each data element used in the ASMs.

Certain elements may have a different meaning depending on their position within the message. It is recommended that caution be taken in the use of these elements to avoid the exchange of ambiguous or contradictory information.

This applies to the following elements:

- Joint Operation Airline Designators
- Operating Airline *Disclosure*—Code Share
- Aircraft Owner
- Cockpit Crew Employer
- Cabin Crew Employer
- Onward Flight
- Operating Airline Disclosure—Shared Airline or Wet Lease Designation

5.6.1 ASM Message Specification

Data Element	Sub-Message Action Identifiers												Format	Data Element Example	Notes
	NEW	CNL	RIN	RPL	ACK	ADM	CON	EQT	FLT	NAC	RRT	TIM			
Message Heading															
Standard Message Identifier	M	M	M	M	M	M	M	M	M	M	M	M	ASM	ASM	
End of line	M	M	M	M	M	M	M	M	M	M	M	M	<≡		
Time Mode	C	C	C	C	C	C	C	C	C	C	C	C	aa(a)	UTC or LT	If data element not provided assume UTC
End of line	C	C	C	C	C	C	C	C	C	C	C	C	<≡		
Message Reference															
Message Sequence Reference	C	C	C	C	C	C	C	C	C	C	C	C	nnaaannnnnannn	24MAY00144E003	The Data Element structure is: Date of Message; Message Group Serial Number; Continuation/End Code; Message Serial Number.
Creator Reference	O	O	O	O	C	O	O	O	O	C	O	O	/x(x[·34])	/REF 123/449	If included, must begin with a slash (/)
End of line	C	C	C	C	C	C	C	C	C	C	C	C	<≡		Mandatory if any of above elements included
Action Information															
Action Identifier	M	M	M	M	M	M	M	M	M	M	M	M	aaa	RPL	
Secondary Action Identifier(s)	-	-	-	O	-	-	O	O	-	-	O	O	/aaa(/aaa [·4])	/EQT	If included, each must be preceded with a slash (/)
Separator (Space)	C	C	C	C	-	C	C	C	C	-	C	C	→	Space	
Change Reason(s)	O	O	O	O	-	O	O	O	O	-	O	O	aaaa(/aaaa [·8]	WEAT	May be repeated with each repeat preceded by a slash (/)
End of line	M	M	M	M	M	M	M	M	M	M	M	M	<≡		
Flight Information															
Flight Identifier	M	M	M	M		M	M	M	M		M	M	xx(a)nnn(n)(a)/nn(aaa (nn))	LX544A/12MAY03	The Data Element structure is: Airline Designator; Flight Number; Operational Suffix (if applicable); Flight Identifier Date preceded by a slash (/) with Optional Month (aaa) and Year (nn).
Separator (Space)		C	C			C	C	C	C		C		→	Space	
Flight Leg(s) Change Identifier	-	C	C	-		C	C	C	C		C	-	aaa/aaa(/aaa [·10])	ORD/LAS	
Separator (Space)									M				→	Space	
New Flight Identifier									M				xx(a)nnn(n)(a)/nn(aaaa)(nn)	LX644/12AUG(02)	Year is Optional
Separator (Space)	C			C		C			-				→	Space	Mandatory if the next element included
Joint Operation Airline Designators (DEI 1)	C			C		C							1/xx(a)/xx(a)(/xx(a))	1/LX/LH	If required If included, there must be a minimum of 2 or a maximum of 3 Airline Designators with each preceded by a sash (/)
Separator (Space)	C			C		C		C					→	Space	Mandatory if the next element included
Operating Airline Disclosure—Code Share (DEI 2)	C			C		C		C					2/xx(a) or 2/X	2/DL or 2/X	If required
Separator (Space)	C			C		C		C					→	Space	Mandatory if the next element included
Aircraft Owner (DEI 3)	C			C		C		C					3/xx(a) or 3/X	3/LX or 3/X	If required
Separator (Space)	C			C		C		C					→	Space	Mandatory if the next element included
Cockpit Crew Employer (DEI 4)	C			C		C		C					4/xx(a) or 4/X	4/LH or 4/X	If required

Data Element	Sub-Message Action Identifiers												Format	Data Element Example	Notes
	NEW	CNL	RIN	RPL	ACK	ADM	CON	EQT	FLT	NAC	RRT	TIM			
Separator (Space)	C			C		C		C					→	Space	Mandatory if the next element included
Cabin Crew Employer (DEI 5)	C			C		C		C					5/xx(a) or 5/X	5/LX or 5/X	If required
Separator (Space)	C			C		C		C					→	Space	Mandatory if the next element included
Onward Flight (DEI 6)	O			O		O		O					6/xx(a)nnn(n)(a)(/nn(aaa(nn)))	6/SQ103C/1	If required
Separator (Space)						C							→	Space	Mandatory if the next element included
Meal Service Note						O							7/aa(a)(/aa(a))[-4] or 7//a(a) or 7/aa(a)(/aa(a)[-3]//a/(a))	7/FDC/CD/YS/MS/LS 7//S 7/CL//S	If required
Separator (Space)	C			C		C		C					→	Space	Mandatory if the next element included
Operating Airline Disclosure—Shared Airline or Wet Lease Designation (DEI 9)	C			C		C		C					9/xx(a) or 9/X	9/DL or 9/X	If required
End of line	M	M	M	M		M	M	M	M		M	M	<≡		
For different Flight Designators with identical data, repeat from Flight Information	C	C	C	C		C	C	C			C	C	→		
Equipment Information															
Service Type	M			M			M	M			C		a	G	
Separator (Space)	M			M			M	M			C		→	Space	
Aircraft Type	M			M			M	M			C		xxx	M80	
Separator (Space)	M			M			M	M			C		→	Space	
Passenger Reservations Booking Designator	C			C			C	C			C		a(x)(x)(x)(x)..	FCML	
Passenger Reservations Booking Modifier	C			C			C	C			C		/aa(aa)(aa)(aa)...	/FNCN	If included, must start with a slash (/)
Aircraft Configuration/Version	C			C			C	C			C		.a(x)(x)(x)(x)..	.FCM	If included, must start with a period (.)
Separator (Space)	C			C			C	C			C		→	Space	Mandatory if the next element included
Aircraft Registration	O			O			O	O			O			HBINM	If required
Separator (Space)	C			C			C	C			C		→	Space	Mandatory if the next element included
Operating Airline Disclosure—Code Share (DEI 2)	C			C			C	C			C		2/xx(a) or 2/X	2/DL or 2/X	If required
Separator (Space)	C			C			C	C			C		→	Space	Mandatory if the next element included
Aircraft Owner (DEI 3)	C			C			C	C			C		3/xx(a) or 3/X	3/LX or 3/X	If required
Separator (Space)	C			C			C	C			C		→	Space	Mandatory if the next element included
Cockpit Crew Employer (DEI 4)	C			C			C	C			C		4/xx(a) or 4/X	4/LH or 4/X	If required
Separator (Space)	C			C			C	C			C		→	Space	Mandatory if the next element included
Cabin Crew Employer (DEI 5)	C			C			C	C			C		5/xx(a) or 5/X	5/LX or 5/X	If required
Separator (Space)	C			C			C	C			C		→	Space	Mandatory if the next element included
Onward Flight (DEI 6)	O			O			O	O			O		6/xx(a)nnn(n)(a)(/nn(aaa(nn)))	6/SQ103C/1	If required
Separator (Space)	C			C			C	C			C		→	Space	Mandatory if the next element included

Data Element	Sub-Message Action Identifiers												Format	Data Element Example	Notes
	NEW	CNL	RIN	RPL	ACK	ADM	CON	EQT	FLT	NAC	RRT	TIM			
Operating Airline Disclosure—Shared Airline or Wet Lease Designation (DEI 9)	C			C			C	C			C		9/xx(a) or 9/X	9/DL or 9/X	If required
End of line	M			M			M	M			M		<≡		
Leg Information															
Departure Station	M			M							M	M	aaa	GVA	
Scheduled Time of Aircraft Departure (Aircraft STD)	M			M							M	M	(nn)nnnn	1830	Preceded by Date if different from 'Flight Identifier Date'
Scheduled Time of Passenger Departure (Passenger STD)	C			C							C	C	/nnnn	/1815	If included, must begin with a slash (/)
Separator (Space)	M											M	→	Space	Mandatory if the next element included
Arrival Station	M			M							M	M	aaa	FRA	
Scheduled Time of Aircraft Arrival (Aircraft STA)	M			M							M	M	(nn)nnnn	1945	Preceded by Date if different from 'Flight Identifier Date'
Scheduled Time of Passenger Arrival (Passenger STA)	C			C							C	C	/nnnn	/1955	If included, must begin with a slash (/)
Separator (Space)	C			C							C		→	Space	Mandatory if the next element included
Joint Operation Airline Designators (DEI 1)	C			C							C		1/xx(a)/xx(a) (/xx(a))	1/LX/LH	If required
Separator (Space)	C			C							C		→	Space	Mandatory if the next element included
Operating Airline Disclosure—Code Share (DEI 2)	C			C							C		2/xx(a) or 2/X	2/DL or 2/X	If required
Separator (Space)	C			C							C		→	Space	Mandatory if the next element included
Aircraft Owner (DEI 3)	C			C							C		3/xx(a) or 3/X	3/LX or 3/X	Included only if same physical aircraft continues
Separator (Space)	C			C							C		→	Space	Mandatory if the next element included
Cockpit Crew Employer (DEI 4)	C			C							C		4/xx(a) or 4/X	4/LH or 4/X	If required
Separator (Space)	C			C							C		→	Space	Mandatory if the next element included
Cabin Crew Employer (DEI 5)	C			C							C		5/xx(a) or 5/X	5/LX or 5/X	If required
Separator (Space)	C			C							C		→	Space	Mandatory if the next element included
Onward Flight) (DEI 6)	O			O							O		6/xx(a)nnn(n)(a)(/nn(aaa(nn)))	6/SQ103C/1	If required
Separator (Space)	C			C							C	C	→	Space	Mandatory if the next element included
Meal Service Note (DEI 7)	O			O							O	O	7/aa(a)(/aa(a)[·4] or 7//a(a) or 7/aa(a)(/aa(a)[·3]//a(a)	7/FDC/CD/YS/MS/LS 7//S 7/CL//S	If required
Separator (Space)	C			C							C		→	Space	Mandatory if the next element included
Operating Airline Disclosure—Shared Airline or Wet Lease Designation (DEI 9)	C			C							C		9/xx(a) or 9/x	9/DL or 9/X	If required
End of line	M			M							M	M	<≡		
For next leg or group of consecutive legs, repeat from Leg Information; if different aircraft type etc., repeat from Equipment Information	C			C							C	C			

Data Element	Sub-Message Action Identifiers												Format	Data Element Example	Notes
	NEW	CNL	RIN	RPL	ACK	ADM	CON	EQT	FLT	NAC	RRT	TIM			
Segment Information															
Traffic Restriction Note (DEI 8)	C			C		C					C		aaaaaa→8/a (/nnn) (/x(x[·53])	GVAFRA 8/Z/173/A	If required
Or															
Other Segment Information	C			C		C	C	C	C		C	C	aaaaaa→nn(n) (/x(x[·57])	GVAFRA 10/LX836	If required
End of line	C					C	C	C	C		C	C	<≡		Mandatory if one of above elements included
For further Segment Information, repeat from Segment Information	C			C		C	C	C	C		C	C			If required
Sub-Message Supplementary Information	O	O	O	O		O	O	O	O		O	O			All the following elements must be included if **Sub-Message Supplementary** Information is included
Supplementary Information Indicator	M	M	M	M		M	M	M	M		M	M	SI	SI	
Separator (Space)	M	M	M	M		M	M	M	M		M	M	→	Space	
Supplementary Information	M	M	M	M		M	M	M	M		M	M	x(x)...	ABCDEF	Free Text
End of line	M	M	M	M		M	M	M	M		M	M	<≡		
Sub-Message Separation	C	C	C	C		C	C	C	C		C	C	//		Also used if Supplementary Information for Whole Message follows
End of line	C	C	C	C		C	C	C	C		C	C	<≡		Mandatory if Sub-Message Separation included
For more sub-messages, repeat from applicable Action Information, or, if necessary, create a new physical message and repeat from Message Heading	C	C	C	C		C	C	C	C		C	C			
Supplementary Information for Whole Message	O	O	O	O		O	O	O	O		O	O			
Supplementary information Indicator	M	M	M	M		M	M	M	M		M	M	SI	SI	
Separator (Space)	M	M	M	M		M	M	M	M		M	M	→	Space	
Supplementary Information	M	M	M	M		M	M	M	M		M	M	x(x)...	DELAY DUE FOG	Free Text
End of line	M	M	M	M		M	M	M	M		M	M	<≡		
Reject Information															
Blank Line Separator										M			<≡		
Error Line (First)										M			nnn	004	
Separator (Space)										M			→	Space	
Reject Reason (First)										M			x(x[·63]	INVALID DEI 711	
End of line										M			<≡		
Error Line (Other)										O			nnn	006	
Separator (Space)										C			→	Space	Mandatory if Reject Reason (Other) included
Reject Reason (Other)										C			x(x[·63]	SYSTEM ERROR	
End of line										C			<≡		Mandatory if Reject Reason (Other) included
For further Reject Reasons, repeat from Error Line (Other)										C					
Repeat of Rejected Message															
Blank Line Separator										M			<≡		
Message Lines before Action Identifier										O			x(x)...		
Message Lines from Action Identifier										M			x(x)...		
End of line										M			<≡		

5.7 SSM Sub-Message Definition

The Sub-Message definition details the specific use of each sub-message with an example of each sub-message and additional explanatory notes for each sub-message and data element.

The 'Status' column in each Table reflects the Status as shown in the Message Specification Table in Section 4.5. The structure of each element is also defined in that Table.

5.7.1 NEW–Insertion of New Flight Information

Example:

```
ASM
LT
24MAY00144E003/REF 123/449
NEW OPER
LX544A/12 1/LX/LH 3/LX 4/LH 5/LX 6/LX545A/13 9/LX
G M80 FCYML/FNCN.FCM HBINM
GVA1830/1815 FRA1945/1955 7/FDC/CD/YS/MS/LS
GVAFRA 8/Z/173/A
GVAFRA 10/LX836
```

→ *Refer to Section 5.8 for additional examples on the use of 'NEW'.*

Data Element	Data Element Example	Status	Use and Explanatory Notes
Message Heading			
Standard Message Identifier	ASM	M	
End of line	<≡	M	
Time Mode	LT	C	If data element not provided assume UTC
End of line	<≡	C	Mandatory if Time Mode included
Message Reference			
Message Sequence Reference	24MAY00144E003	C	Mandatory if a long message is split into parts. The Data Element is composed of: Date of Message (nnaaa); Message Group Serial Number (nnnnn); Continuation/End Code (a); Message Serial Number (nnn).
Creator Reference	/REF 123/449	O	If included, must begin with a slash (/)
End of line	<≡	C	Mandatory if any of above elements included

Data Element	Data Element Example	Status	Use and Explanatory Notes
Action Information			
Action Identifier	NEW	M	
Separator (Space)	Space	C	Mandatory if Change Reason(s) included
Change Reason(s)	OPER	O	May be repeated. If repeated, each repeat must be preceded by a slash (/).
End of line	<≡	M	
Flight Information			*Flight Information may be repeated on a separate line for different flights with identical information*
Flight Identifier	LX544A/12	M	The Data Element structure is: Airline Designator; Flight Number; Operational Suffix (if applicable); Flight Identifier Date preceded by a slash (/) with Optional Month (aaa) and Year (nn).
Separator (Space)	Space	C	Mandatory if the next element included
Joint Operation Airline Designators (DEI 1)	1/LX/LH	C	If applicable, applies to all legs subsequently stated. Minimum of 2 and maximum of 3 Airline Designators.
Separator (Space)	Space	C	Mandatory if the next element included
Operating Airline Disclosure—Code Share (DEI 2)		C	If applicable, applies to all legs subsequently stated. Not applicable if Operating Airline Disclosure—Shared Airline or Wet Lease Designation (DEI 9) is stated below.
Separator (Space)	Space	C	Mandatory if the next element included
Aircraft Owner (DEI 3)	3/LX	C	If applicable, applies to all legs subsequently stated
Separator (Space)	Space	C	Mandatory if the next element included
Cockpit Crew Employer (DEI 4)	4/LH	C	If applicable, applies to all legs subsequently stated
Separator (Space)	Space	C	Mandatory if the next element included
Cabin Crew Employer (DEI 5)	5/LX	C	If applicable, applies to all legs subsequently stated.
Separator (Space)	Space	C	Mandatory if the next element included
Onward Flight (DEI 6)	6/LX545A/13	O	Applies to the last leg of this flight.

Data Element	Data Element Example	Status	Use and Explanatory Notes
Separator (Space)	Space	C	Mandatory if the next element included
Operating Airline Disclosure—Shared Airline or Wet Lease Designation (DEI 9)	9/LX	C	If applicable, applies to all legs subsequently stated. Not applicable if Operating Airline Disclosure—Code Share (DEI 2) is stated above.
End of line	<≡	M	
Equipment Information			*Applies to all legs subsequently stated until repeated with the exception of the Onward Flight, which, if stated, applies to the last of the legs subsequently stated*
Service Type	G	M	
Separator (Space)	Space	M	
Aircraft Type	M80	M	
Separator (Space)	Space	M	
Passenger Reservations Booking Designator	FCYML	C	If the Passenger Reservations Booking Designator is not stated, then the Aircraft Configuration/Version must be stated
Passenger Reservations Booking Modifier	/FNCN	C	If included, must start with a slash (/)
Aircraft Configuration/Version	.FCM	C	If included, must start with a period (.). If the Aircraft Configuration/Version is not stated then the Passenger Reservations Booking Designator must be stated
Separator (Space)	Space	C	Mandatory if the next element included
Aircraft Registration	HBINM	O	
The following data elements may be stated here if not already stated under Flight Information: Operating Airline Disclosure—Code Share (DEI 2) Aircraft Owner (DEI 3); Cockpit Crew Employer (DEI 4); Cabin Crew Employer (DEI 5); Onward Flight (DEI 6); Operating Airline Disclosure—Shared Airline or Wet Lease Designation (DEI 9)			
End of line	<≡	M	

Data Element	Data Element Example	Status	Use and Explanatory Notes
Leg Information			*Leg Information may be repeated on a separate line for the next leg/group of consecutive legs.* *If the Equipment Information for such legs is different, the Equipment Information is repeated first.*
Departure Station	GVA	M	
Scheduled Time of Aircraft Departure (Aircraft STD)	1830	M	Must be preceded by the date if different from the Flight Identifier Date. The specification of the date is Mandatory if any of the dates within a sub-message is different from the Flight Identifier Date.
Scheduled Time of Passenger Departure (Passenger STD)	/1815	C	If included, must begin with a slash (/)
Separator (Space)	Space	M	
Arrival Station	FRA	M	
Scheduled Time of Aircraft Arrival (Aircraft STA)	1945	M	Must be preceded by the date if different from the Flight Identifier Date. The specification of the date is Mandatory if any of the dates within a sub-message is different from the Flight Identifier Date.
Scheduled Time of Passenger Arrival (Passenger STA)	/1955	C	If included, must begin with a slash (/)
The following data elements may be stated here if not already stated under Flight Information: Joint Operation Airline Designators (DEI 1); Operating Airline Disclosure—Code Share (DEI 2) Aircraft Owner (DEI 3); Cockpit Crew Employer (DEI 4); Cabin Crew Employer (DEI 5); Onward Flight (DEI 6)			If stated, the data elements apply for this leg only
Separator (Space)	Space	C	
Meal Service Note (DEI 7)	7/FDC/CD/YS/MS/LS	O	If required

Data Element	Data Element Example	Status	Use and Explanatory Notes
Separator (Space)	Space	C	Mandatory if the next element included
This data element may be stated here if it has not already been stated under Flight Information;			If stated, applies to this leg only
Operating Airline Disclosure—Shared Airline or Wet Lease Designation (DEI 9)			
End of line	<≡	M	
Segment Information			*If applicable, the information is composed of either the Traffic Restriction Note or the optional/conditional other Segment Information. Additional Segment Information may be repeated on separate lines.*
Traffic Restriction Note (DEI 8)	GVAFRA 8/Z/173/A	C	If applicable
or			
Other Segment Information	GVAFRA 10/LX836	C	If applicable
End of line	<≡	C	Mandatory if one of above elements included
Sub-Message Supplementary Information		O	
Supplementary Information Indicator	SI	M	
Separator (Space)	Space	M	
Supplementary Information		M	Free Text
End of line	<≡	M	
Sub-Message Separation	//	C	Applicable if additional sub-messages are required or if Supplementary Information for Whole Message follows. *For more sub-messages, repeat from applicable Action Information.*
End of line	<≡	C	Mandatory if Sub-Message Separation included
Supplementary Information for Whole Message		O	
Supplementary Information Indicator	SI	M	
Separator (Space)	Space	M	
Supplementary Information		M	Free Text
End of line	<≡	M	

5.7.2 CNL–Cancellation

The CNL Sub-Message may only be used to remove operations or part-operations. The Action Identifier ADM and the cancel code "NIL" is used to cancel existing administrative information.

Example:

```
ASM
UTC
13JUN00901E002/REF 150/212
CNL CREW
AA407P/27 ORD/LAS
```

→ *Refer to Section 5.8 for additional examples on the use of 'CNL'.*

Data Element	Data Element Example	Status	Use and Explanatory Notes
Message Heading			
Standard Message Identifier	ASM	M	
End of line	<≡	M	
Time Mode	UTC	C	If data element not provided assume UTC
End of line	<≡	C	Mandatory if Time Mode included
Message Reference			
Message Sequence Reference	13JUN00901E002	C	Mandatory if a long message is split into parts. The Data Element is composed of: Date of Message (nnaaa); Message Group Serial Number (nnnnn); Continuation/End Code (a); Message Serial Number (nnn).
Creator Reference	/REF 150/212	O	If included, must begin with a slash (/)
End of line	<≡	C	Mandatory if any of above elements included
Action Information			
Action Identifier	CNL	M	
Separator (Space)	Space	C	Mandatory if Change Reason(s) included
Change Reason(s)	CREW	O	May be repeated. if repeated, each repeat must be preceded by a slash(/).
End of line	<≡	M	

Data Element	Data Element Example	Status	Use and Explanatory Notes
Flight Information			*Flight Information may be repeated on a separate line for different flights with identical information*
Flight Identifier	AA407P/27	M	The Data Element structure is: Airline Designator; Flight Number; Operational Suffix (if applicable); Flight Identifier Date preceded by a slash (/) with Optional Month (aaa) and Year (nn). The Airline Designator, Flight Number and Operational Suffix (if applicable) may be repeated if operated under the same Flight Identifier Date. Each repetition must be preceded by a slash (/). A common Airline Designator may be omitted in repetition.
Separator (Space)	Space	C	Mandatory if the next element included
Flight Leg(s) Change Identifier	ORD/LAS	C	Applicable if change does not apply to entire routing
End of line	<≡	M	
Sub-Message Supplementary Information		O	
Supplementary Information Indicator	SI	M	
Separator (Space)	Space	M	
Supplementary Information		M	Free Text
End of line	<≡	M	
Sub-Message Separation	//		Applicable if additional sub-messages are required or if Supplementary Information for Whole Message follows. *For more sub-messages, repeat from applicable Action Information*.
End of line	<≡	C	Mandatory if Sub-Message Separation included
Supplementary Information for Whole Message		O	
Supplementary Information Indicator	SI	M	
Separator (Space)	Space	M	
Supplementary Information		M	Free Text
End of line	<≡	M	

5.7.3 RIN–Reinstatement

Example:

```
ASM
UTC
14JUN00904E001/REF 152/212
RIN COMM
AA407P/27 ORD/LAS
```

Data Element	Data Element Example	Status	Use and Explanatory Notes
Message Heading			
Standard Message Identifier	ASM	M	
End of line	<≡	M	
Time Mode	UTC	C	If data element not provided assume UTC
End of line	<≡	C	Mandatory if Time Mode included
Message Reference			
Message Sequence Reference	14JUN00904E001	C	Mandatory if a long message is split into parts. The Data Element is composed of: Date of Message (nnaaa); Message Group Serial Number (nnnnn); Continuation/End Code (a); Message Serial Number (nnn).
Creator Reference	/REF 152/212	O	If included, must begin with a slash (/)
End of line	<≡	C	Mandatory if any of above elements included
Action Information			
Action Identifier	RIN	M	
Separator (Space)	Space	C	Mandatory if Change Reason(s) included
Change Reason(s)	COMM	O	May be repeated. If repeated, each repeat must be preceded by a slash (/).
End of line	<≡	M	

Data Element	Data Element Example	Status	Use and Explanatory Notes
Flight Information			*Flight Information may be repeated on a separate line for different flights with identical information*
Flight Identifier	AA407P/27	M	The Data Element structure is: Airline Designator; Flight Number; Operational Suffix (if applicable); Flight Identifier Date preceded by a slash (/) with Optional Month (aaa) and Year (nn). The Airline Designator, Flight Number and Operational Suffix (if applicable) may be repeated if operated under the same Flight Identifier Date. Each repetition must be preceded by a slash (/). A common Airline Designator may be omitted in repetition.
Separator (Space)	Space	C	Mandatory if the next element included
Flight Leg(s) Change Identifier	ORD/LAS	C	Applicable if change does not apply to entire routing
End of line	<≡	M	
Sub-Message Supplementary Information		O	
Supplementary Information Indicator	SI	M	
Separator (Space)	Space	M	
Supplementary Information		M	Free Text
End of line	<≡	M	
Sub-Message Separation	//		Applicable if additional sub-messages are required or if Supplementary Information for Whole Message follows. For more sub-messages, repeat from applicable Action Information.
End of line	<≡	C	Mandatory if Sub-Message Separation included
Supplementary Information for Whole Message		O	
Supplementary Information Indicator	SI	M	
Separator (Space)	Space	M	
Supplementary Information		M	Free Text
End of line	<≡	M	

5.7.4 RPL–Replacement of Existing Flight Information

The RPL Sub-Message replaces all information pertaining to a Flight Designator on the stated date.

Example:

```
ASM
UTC
13AUG00031C012/REF 92/101
RPL WEAT
SQ102C/13 1/SQ/MH 2/QF 3/QF 4/SQ 5/MH 6/SQ103C/14
C 310 F10Y100/FO.F10Y120 9VSTM
SIN07300715 KUL0820/0835 7/FB/YS
QQQQQQ 8/Z/171/A
QQQQQQ 50/QF123
```

Data Element	Data Element Example	Status	Use and Explanatory Notes
Message Heading			
Standard Message Identifier	ASM	M	
End of line	<≡	M	
Time Mode	UTC	C	If data element not provided assume UTC
End of line	<≡	C	Mandatory if Time Mode included
Message Reference			
Message Sequence Reference	13AUG00031C012	C	Mandatory if a long message is split into parts. The Data Element is composed of: Date of Message (nnaaa); Message Group Serial Number (nnnnn); Continuation/End Code (a); Message Serial Number (nnn).
Creator Reference	/REF 92/101	O	If included, must begin with a slash (/)
End of line	<≡	C	Mandatory if any of above elements included
Action Information			
Action Identifier	RPL	M	
Secondary Action Identifier(s)		O	Any of the Seconday Action Indentifiers ADM, CON, EQT, RRT, TIM may be included after RPL Each must be preceded by a slash (/)
Separator (Space)	Space	C	Mandatory if Change Reason(s) included

Data Element	Data Element Example	Status	Use and Explanatory Notes
Change Reason(s)	WEAT	O	May be repeated. if repeated, each repeat must be preceded by a slash (/).
End of line	<≡	M	
Flight Information			*Flight Information may be repeated on a separate line for different flights with identical data/information*
Flight Identifier	SQ102C/13	M	The Data Element structure is: Airline Designator; Flight Number; Operational Suffix (if applicable); Flight Identifier Date preceded by a slash (/) with Optional Month (aaa) and Year (nn).
Separator (Space)	Space	C	Mandatory if the next element included
Joint Operation Airline Designators (DEI 1)	1/SQ/MH	C	If applicable, applies to all legs subsequently stated. Minimum of 2 and maximum of 3 Airline Designators.
Separator (Space)	Space	C	Mandatory if the next element included
Operating Airline Disclosure—Code Share (DEI 2)	2/QF	C	If applicable, applies to all legs subsequently stated. Not applicable if Operating Airline Disclosure—Shared Airline or Wet Lease Designation (DEI 9) is stated below.
Separator (Space)	Space	C	Mandatory if the next element included
Aircraft Owner (DEI 3)	3/QF	C	If applicable, applies to all legs subsequently stated
Separator (Space)	Space	C	Mandatory if the next element included
Cockpit Crew Employer (DEI 4)	4/SQ	C	If applicable, applies to all legs subsequently stated
Separator (Space)	Space	C	Mandatory if the next element included
Cabin Crew Employer (DEI 5)	5/MH	C	If applicable, applies to all legs subsequently stated.
Separator (Space)	Space	C	Mandatory if the next element included
Onward Flight (DEI 6)	6/SQ103C/14	O	If applicable, applies to the last leg of this flight
Separator (Space)	Space	C	Mandatory if the next element included

Data Element	Data Element Example	Status	Use and Explanatory Notes
Operating Airline Disclosure—Shared Airline or Wet Lease Designation (DEI 9)		C	If applicable, applies to all legs subsequently stated. Not applicable if Operating Airline Disclosure—Code Share (DEI 2) is stated above.
End of line	<≡	M	
Equipment Information			*Applies to all legs subsequently stated until repeated with the exception of the Onward Flight, which, if stated, applies to the last of the subsequently stated legs*
Service Type	C	M	
Separator (Space)	Space	M	
Aircraft Type	310	M	
Separator (Space)	Space	M	
Passenger Reservations Booking Designator	F10Y100	C	If the Passenger Reservations Booking Designator is not stated, then the Aircraft Configuration/Version must be stated
Passenger Reservations Booking Modifier	/F0	C	If included, must start with a slash (/)
Aircraft Configuration/Version	.F10Y120	C	If included, must start with a period (.). If the Aircraft Configuration/Version is not stated then the Passenger Reservations Booking Designator must be stated
Separator (Space)	Space	C	Mandatory if the next element included
Aircraft Registration	9VSTM	O	
The following data elements may be stated here if they have not already been stated under Flight Information: Operating Airline Disclosure—Code Share (DEI 2) Aircraft Owner (DEI 3); Cockpit Crew Employer (DEI 4); Cabin Crew Employer (DEI 5); Onward Flight (DEI 6); Operating Airline Disclosure—Shared Airline or Wet Lease Designation (DEI 9)			
End of line	<≡	M	

Data Element	Data Element Example	Status	Use and Explanatory Notes
Leg Information			*Leg Information may be repeated on a separate line for the next leg/group of consecutive legs.* *If the Equipment Information for such legs is different, the Equipment Information is repeated first.*
Departure Station	SIN	M	
Scheduled Time of Aircraft Departure (Aircraft STD)	0730	M	Must be preceded by the date if different from the Flight Identifier Date. The specification of the date is Mandatory if any of the dates within a sub-message is different from the Flight Identifier Date.
Scheduled Time of Passenger Departure (Passenger STD)	/0715	C	If included, must begin with a slash (/)
Separator(Space)	Space	M	
Arrival Station	KUL	M	
Scheduled Time of Aircraft Arrival (Aircraft STA)	0820	M	Must be preceded by the date if different from the Flight Identifier Date. The specification of the date is Mandatory if any of the dates within a sub-message is different from the Flight Identifier Date.
Scheduled Time of Passenger Arrival (Passenger STA)	/0835	C	If included, must begin with a slash (/)
The following data elements may be stated here if they have not already been stated under Flight or Equipment Information. Joint Operation Airline Designators (DEI 1); Operating Airline Disclosure—Code Share (DEI 2) Aircraft Owner (DEI 3); Cockpit Crew Employer (DEI 4); Cabin Crew Employer (DEI 5); Onward Flight (DEI 6)			If stated, the data elements apply to this leg only.
Separator(Space)	Space	C	
Meal Service Note (DEI 7)	7/FB/YS	O	If required
Separator (Space)	Space	C	Mandatory if the next element included

Data Element	Data Element Example	Status	Use and Explanatory Notes
This data element may be If stated, applies to this leg only stated here if not already stated under Flight or Equipment Information;			If stated, applies to this leg only
Operating Airline Disclosure—Shared Airline or Wet Lease Designation (DEI 9)		C	
End of line	<≡	M	
Segment Information			*If applicable, the information is composed of either the Traffic Restriction Note or the optional/conditional other Segment Information.* *Additional Segment Information may be repeated on separate lines.*
Traffic Restriction Note (DEI 8)	QQQQQQ 8/Z/171/A	C	If applicable
or			
Other Segment Information	QQQQQQ 50/QF123	C	If applicable
End of line	<≡	C	Mandatory if one of above elements included
Sub-Message Supplementary Information		O	
Supplementary Information Indicator	SI	M	
Separator (Space)	Space	M	
Supplementary Information		M	Free Text
End of line	<≡	M	
Sub-Message Separation	//	C	Applicable if additional sub-messages are required or if Supplementary Information for Whole Message follows. For more sub-messages, repeat from applicable Action Information.
End of line	<≡	C	Mandatory if Sub-Message Separation included
Supplementary Information for Whole Message		O	
Supplementary Information Indicator	SI	M	
Separator (Space)	Space	M	
Supplementary Information		M	Free Text
End of line	<≡	M	

5.7.5 ACK–Acknowledgement

Example:

```
ASM
LT
17NOV00026E001/LY0005/21NOV
ACK
```

Data Element	Data Element Example	Status	Use and Explanatory Notes
Message Heading			
Standard Message Identifier	ASM	M	
End of line	<≡	M	
Time Mode	LT	C	If data element not provided assume UTC
End of line	<≡	C	Mandatory if Time Mode included
Message Reference			If included in the original ASM, the Message Reference line in the ACK sub-message should exactly match the Message Reference line sent in the original ASM
Message Sequence Reference	17NOV00026E001	C	The Data Element is composed of: Date of Message (nnaaa); Message Group Serial Number (nnnnn); Continuation/End Code (a); Message Serial Number (nnn).
Creator Reference	/LY0005/21NOV	C	If included, must begin with a slash (/)
End of line	<≡	C	Mandatory if any of above elements included
Action Information			
Action Identifier	ACK	M	
End of line	<≡	M	

5.7.6 ADM–Change of Existing Information Expressed by the Use of Data Element Identifier Only

The ADM Sub-Message structure is also used to delete existing information. In this case, the cancel code "NIL" should be used instead of the field information.

Example:

```
ASM
UTC
30JUL00916C003/REF 70/891
ADM COMM
RG878A/21 GIG/BOG 1/RG/AV 3/AV 4/AV 5/RG 6/AV081C/22 7/CDC/YD 9/TP
GIGBOG 8/Z/171/Q
QQQQQQ 121/NIL
```

Data Element	Data Element Example	Status	Use and Explanatory Notes
Message Heading			
Standard Message Identifier	ASM	M	
End of line	<≡	M	
Time Mode	UTC	C	If data element not provided assume UTC
End of line	<≡	C	Mandatory if Time Mode included
Message Reference			
Message Sequence Reference	30JUL00916C003	C	Mandatory if a long message is split into parts. The Data Element is composed of: Date of Message (nnaaa); Message Group Serial Number (nnnnn); Continuation/End Code (a); Message Serial Number (nnn).
Creator Reference	/REF 70/891	O	If included, must begin with a slash (/)
End of line	<≡	C	Mandatory if any of above elements included
Action Information			
Action Identifier	ADM	M	
Separator (Space)	Space	C	Mandatory if Change Reason(s) included
Change Reason(s)	COMM	O	May be repeated. If repeated, each repeat must be preceded by a slash (/).
End of line	<≡	M	

Data Element	Data Element Example	Status	Use and Explanatory Notes
Flight Information			*Flight Information may be repeated on a separate line for different flights with identical data/information*
Flight Identifier	RG878A/21	M	The Data Element structure is: Airline Designator; Flight Number; Operational Suffix (if applicable); Flight Identifier Date preceded by a slash (/) with Optional Month (aaa) and Year (nn). The Airline Designator, Flight Number and Operational Suffix (if applicable) may be repeated if operated under the same Flight Identifier Date. Each repetition must be preceded by a slash (/). A common Airline Designator may be omitted in repetition.
Separator (Space)	Space	C	Mandatory if the next element included
Flight Leg(s) Change Identifier	GIG/BOG	C	Included if change does not apply to entire routing
Separator (Space)	Space	C	Mandatory if the next element included
Joint Operation Airline Designators (DEI 1)	1/RG/AV	C	If applicable, minimum of 2 and maximum of 3 Airline Designators
Separator (Space)	Space	C	Mandatory if the next element included
Operating Airline Disclosure—Code Share (DEI 2)		C	If applicable. Not applicable if Operating Airline Disclosure—Shared Airline or Wet Lease Designation (DEI 9) is stated below.
Separator (Space)	Space	C	Mandatory if the next element included
Aircraft Owner (DEI 3)	3/AV	C	If applicable
Separator (Space)	Space	C	Mandatory if the next element included
Cockpit Crew Employer (DEI 4)	4/AV	C	If applicable
Separator (Space)	Space	C	Mandatory if the next element included
Cabin Crew Employer (DEI 5)	5/RG	C	If applicable

Data Element	Data Element Example	Status	Use and Explanatory Notes
Separator (Space)	Space	C	Mandatory if the next element included
Onward Flight	6/AV081C/22	O	Applies to the last leg of this flight
Separator (Space)	Space	C	Mandatory if the next element included
Meal Service Note (DEI 7)	7/CDC/YD	O	
Separator (Space)	Space	C	Mandatory if the next element included
Operating Airline Disclosure—Shared Airline or Wet Lease Designation (DEI 9)	9/TP	C	If applicable. Not applicable if Operating Airline Disclosure—Code Share (DEI 2) is stated above.
End of line	<≡	M	
Segment Information			If applicable, the information is composed of either the Traffic Restriction Note or the optional/conditional other Segment Information. *Additional Segment Information may be repeated on separate lines*.
Traffic Restriction Note (DEI 8)	GIGBOG 8/Z/171/Q	C	If applicable
or			
Other Segment Information	QQQQQQ 121/NIL	C	If applicable
End of line	<≡	C	Mandatory if one of above elements included
Sub-Message Supplementary Information		O	
Supplementary Information Indicator	SI	M	
Separator (Space)	Space	M	
Supplementary Information		M	Free Text
End of line	<≡	M	
Sub-Message Separation	//	C	Applicable if additional sub-messages are required or if Supplementary Information for Whole Message follows. *For more sub-messages, repeat from applicable Action Information*.
End of line	<≡	C	Mandatory if Sub-Message Separation included

Data Element	Data Element Example	Status	Use and Explanatory Notes
Supplementary Information for Whole Message		O	
Supplementary Information Indicator	SI	M	
Separator (Space)	Space	M	
Supplementary Information		M	Free Text
End of line	<≡	M	

5.7.7 CON–Change of Aircraft Configuration/Version

Example:

```
ASM
LT
28MAR00003E001/REF89/175
CON EQUI
BA5620A/30 LHR/ABZ
J 73S MSBL/MOBO.M114 GIBTZ 3/KT 4/BA 5/BA 6/BA5603A/31 9/AMM
LHRABZ 105/10000K
```

Data Element	Data Element Example	Status	Use and Explanatory Notes
Message Heading			
Standard Message Identifier	ASM	M	
End of line	<≡	M	
Time Mode	LT	C	If data element not provided assume UTC
End of line	<≡	C	Mandatory if Time Mode included
Message Reference			
Message Sequence Reference	28MAR00003E001	C	Mandatory if a long message is split into parts. The Data Element is composed of: Date of Message (nnaaa); Message Group Serial Number (nnnnn); Continuation/End Code (a); Message Serial Number (nnn).
Creator Reference	/REF 89/175	O	If included, must begin with a slash (/)
End of line	<≡	C	Mandatory if any of above elements included

Data Element	Data Element Example	Status	Use and Explanatory Notes
Action Information			
Action Identifier	CON	M	
Secondary Action Identifier		O	The Secondary Action Indentifier ADM may be included after CON preceded with a slash (/)
Separator (Space)	Space	C	Mandatory if Change Reason(s) included
Change Reason(s)	EQUI	O	May be repeated. If repeated, each repeat must be preceded by a slash (/).
End of line	<≡	M	
Flight Information			*Flight Information may be repeated on a separate line for different flights with identical data/information*
Flight Identifier	BA5620A/30	M	The Data Element structure is: Airline Designator; Flight Number; Operational Suffix (if applicable); Flight Identifier Date preceded by a slash (/) with Optional Month (aaa) and Year (nn). The Airline Designator, Flight Number and Operational Suffix (if applicable) may be repeated if operated under the same Flight Identifier Date. Each repetition must be preceded by a slash (/). A common Airline Designator may be omitted in repetition.
Separator (Space)	Space	C	Mandatory if the next element included
Flight Leg(s) Change Identifier	LHR/ABZ	C	Included if change does not apply to entire routing
Separator (Space)	Space	C	Mandatory if the next element included
End of line	<≡	M	

Data Element	Data Element Example	Status	Use and Explanatory Notes
Equipment Information			
Service Type	J	M	
Separator (Space)	Space	M	
Aircraft Type	73S	M	
Separator (Space)	Space	M	
Passenger Reservations Booking Designator	MSBL	C	If the Passenger Reservations Booking Designator is not stated, then the Aircraft Configuration/ Version must be stated
Passenger Reservations Booking Modifier	/MOBO	C	If included, must start with a slash (/)
Aircraft Configuration/Version	.M114	C	If included, must start with a period (.). If the Aircraft Configuration/Version is not stated then the Passenger Reservations Booking Designator must be stated
Separator (Space)	Space	C	Mandatory if the next element included
Aircraft Registration	GIBTZ	O	
Separator (Space)	Space	C	Mandatory if the next element included
Operating Airline Disclosure—Code Share (DEI 2)		C	If applicable
Separator (Space)	Space	C	Mandatory if the next element included
Aircraft Owner (DEI 3)	3/KT	C	If applicable
Separator (Space)	Space	C	Mandatory if the next element included
Cockpit Crew Employer (DEI 4)	4/BA	C	If applicable
Separator (Space)	Space	C	Mandatory if the next element included
Cabin Crew Employer (DEI 5)	5/BA	C	If applicable
Separator (Space)	Space	C	Mandatory if the next element included
Onward Flight (DEI 6)	6/BA5603A/31	O	
Separator (Space)	Space	C	Mandatory if the next element included
Operating Airline Disclosure—Shared Airline or Wet Lease Designation (DEI 9)	9/AMM	O	If applicable. Not applicable if Operating Airline Disclosure—Code Share (DEI 2) is stated above.
End of line	<≡	M	

Data Element	Data Element Example	Status	Use and Explanatory Notes
Segment Information		O	*Only Data Element Identifiers 101-108, 113-115, 127, 800-999 are allowed.* *Additional Segment Information may be repeated on separate lines.*
Segment Information	`LHRABZ 105/10000K`	M	
End of line	<≡	M	
Sub-Message Supplementary Information		O	
Supplementary Information Indicator	`SI`	M	
Separator (Space)	`Space`	M	
Supplementary Information		M	Free Text
End of line	<≡	M	
Sub-Message Separation	//	C	Applicable if additional sub-messages are required or if Supplementary Information for Whole Message follows. *For more sub-messages, repeat from applicable Action Information.*
End of line	<≡	C	Mandatory if Sub-Message Separation included
Supplementary Information for Whole Message		O	
Supplementary Information Indicator	`SI`	M	
Separator (Space)	`Space`	M	
Supplementary Information		M	Free Text
End of line	<≡	M	

5.7.8 EQT–Change of Equipment Information

Example:

```
ASM
LT
21DEC00191C007/REF 71/210
EQT TECH
MS855A/21 CAI/LOS 3/DI 4/BA 5/BA 6/MS856A/22 9/WT
G 767 FY/FO.FCM SUGAH
QQQQQQ 910/SPARES PACK
```

→ *Refer to Section 5.8 for additional examples on the use of 'EQT'.*

Data Element	Data Element Example	Status	Use and Explanatory Notes
Message Heading			
Standard Message Identifier	ASM	M	
End of line	<≡	M	
Time Mode	LT	C	If data element not provided assume UTC
End of line	<≡	C	Mandatory if Time Mode included
Message Reference			
Message Sequence Reference	21DEC00191C007	C	Mandatory if a long message is split into parts. The Data Element is composed of: Date of Message (nnaaa); Message Group Serial Number (nnnnn); Continuation/End Code (a); Message Serial Number (nnn).
Creator Reference	/REF 71/210	O	If included, must begin with a slash (/)
End of line	<≡	C	Mandatory if any of above elements included
Action Information			
Action Identifier	EQT	M	
Secondary Action Identifier		O	The Secondary Action Indentifier ADM and/or CON may be included after EQT. If included, each must be preceded with a slash (/)
Separator (Space)	Space	C	Mandatory if Change Reason(s) included
Change Reason(s)	TECH	O	May be repeated. If repeated, each repeat must be preceded by a slash (/).
End of line	<≡	M	

Data Element	Data Element Example	Status	Use and Explanatory Notes
Flight Information			*Flight Information may be repeated on a separate line for different flights with identical information*
Flight Identifier	MS855A/21	M	The Data Element structure is: Airline Designator; Flight Number; Operational Suffix (if applicable); Flight Identifier Date preceded by a slash (/) with Optional Month (aaa) and Year (nn). The Airline Designator, Flight Number and Operational Suffix (if applicable) may be repeated if operated under the same Flight Identifier Date. Each repetition must be preceded by a slash (/). A common Airline Designator may be omitted in repetition.
Separator (Space)	Space	C	Mandatory if the next element included
Flight Leg(s) Change Identifier	CAI/LOS	C	Included if change does not apply to entire routing
Separator (Space)	Space	C	Mandatory if the next element included
Operating Airline Disclosure—Code Share (DEI 2)		C	If applicable Not applicable if Operating Airline Disclosure—Shared Airline or Wet Lease Designation (DEI 9) is stated below.
Separator (Space)	Space	C	Mandatory if the next element included
Aircraft Owner (DEI 3)	3/DI	C	If applicable
Separator (Space)	Space	C	Mandatory if the next element included
Cockpit Crew Employer (DEI 4)	4/BA	C	If applicable
Separator (Space)	Space	C	Mandatory if the next element included
Cabin Crew Employer (DEI 5)	5/BA	C	If applicable
Separator (Space)	Space	C	Mandatory if the next element included
Onward Flight (DEI 6)	6/MS856A/22	O	If applicable
Separator (Space)	Space	C	Mandatory if the next element included

Data Element	Data Element Example	Status	Use and Explanatory Notes
Operating Airline Disclosure—Shared Airline or Wet Lease Designation (DEI 9)	9/WT	C	If applicable. Not applicable if Operating Airline Disclosure—Code Share (DEI 2) is stated above.
End of line	<≡	M	
Equipment Information			
Service Type	G	M	
Separator (Space)	Space	M	
Aircraft Type	767	M	
Separator (Space)	Space	M	
Passenger Reservations Booking Designator	FY	C	If the Passenger Reservations Booking Designator is not stated, then the Aircraft Configuration/Version must be stated
Passenger Reservations Booking Modifier	/FO	C	If included, must start with a slash (/)
Aircraft Configuration/Version	.FCM	C	If included, must start with a period (.). If the Aircraft Configuration/Version is not stated then the Passenger Reservations Booking Designator must be stated
Separator (Space)	Space	C	Mandatory if the next element included
Aircraft Registration	SUGAH	O	
The following data elements may be stated here if they have not already been stated under Flight Information: Operating Airline Disclosure—Code Share (DEI 2) Aircraft Owner (DEI 3); Cockpit Crew Employer (DEI 4); Cabin Crew Employer (DEI 5); Onward Flight (DEI 6); Operating Airline Disclosure—Shared Airline or Wet Lease Designation (DEI 9)			
End of line	<≡	M	

Data Element	Data Element Example	Status	Use and Explanatory Notes
Segment Information		O	*Only Data Element Identifiers 101-108, 113-115, 127, 800-999 are allowed.* *Additional Segment Information may be repeated on separate lines.*
Segment Information	QQQQQQ 910/SPARES PACK	M	
End of line	<≡	M	
Sub-Message Supplementary Information		O	
Supplementary Information Indicator	SI	M	
Separator (Space)	Space	M	
Supplementary Information		M	Free Text
End of line	<≡	M	
Sub-Message Separation	//	C	Applicable if additional sub-messages are required or if Supplementary Information for Whole Message follows. *For more sub-messages, repeat from applicable Action Information.*
End of line	<≡	C	Mandatory if Sub-Message Separation included
Supplementary Information for Whole Message		O	
Supplementary Information Indicator	SI	M	
Separator (Space)	Space	M	
Supplementary Information		M	Free Text
End of line	<≡	M	

5.7.9 FLT–Change of Flight Identifier

Example:

```
ASM
UTC
21OCT00033E001/REF 901/22
FLT OPER
GF084A/22 DHA/MCT GF086A/23
DHAMCT 122/86
```

Data Element	Data Element Example	Status	Use and Explanatory Notes
Message Heading			
Standard Message Identifier	ASM	M	
End of line	<≡	M	
Time Mode	UTC	C	If data element not provided assume UTC
End of line	<≡	C	Mandatory if Time Mode included
Message Reference		O	
Message Sequence Reference	21OCT00033E001	C	Mandatory if a long message is split into parts. The Data Element is composed of: Date of Message (nnaaa); Message Group Serial Number (nnnnn); Continuation/End Code (a); Message Serial Number (nnn).
Creator Reference	/REF 901/22	O	If included, must begin with a slash (/)
End of line	<≡	C	Mandatory if any of above elements included
Action Information			
Action Identifier	FLT	M	
Separator (Space)	Space	C	Mandatory if Change Reason(s) included
Change Reason(s)	OPER	O	May be repeated. If repeated, each repeat must be preceded by a slash (/).
End of line	<≡	M	

Data Element	Data Element Example	Status	Use and Explanatory Notes
Flight Information			
Exisiting Flight Identifier	GF084/22	M	The Data Element structure is: Airline Designator; Flight Number; Operational Suffix (if applicable); Flight Identifier Date preceded by a slash (/) with Optional Month (aaa) and Year (nn).
Separator (Space)	Space	C	Mandatory if the next element included
Flight Leg(s) Change Identifier	DHA/MCT	C	Included if change does not apply to entire routing
Separator (Space)	Space	M	
New Flight Identifier	GF086/23	M	The Data Element structure is: Airline Designator; Flight Number; Operational Suffix (if applicable); Flight Identifier Date preceded by a slash (/) with Optional Month (aaa) and Year (nn). If changed from existing Flight Identifier Date. May only occur if change does not apply to entire routing.
End of line	<≡	M	
Segment Information		O	*Only Data Element Identifiers 10, 50, 122, 800-999 are allowed.* *Additional Segment Information may be repeated on separate lines.*
Segment Information	DHAMCT 122/86	M	
End of line	<≡	M	
Sub-Message Supplementary Information		O	
Supplementary Information Indicator	SI	M	
Separator (Space)	Space	M	
Supplementary Information		M	Free Text
End of line	<≡	M	

Data Element	Data Element Example	Status	Use and Explanatory Notes
Sub-Message Separation	//	C	Applicable if additional sub-messages are required or if Supplementary Information for Whole Message follows. *For more sub-messages, repeat from applicable Action Information*.
End of line	<≡	C	Mandatory if Sub-Message Separation included
Supplementary Information for Whole Message		O	
Supplementary Information Indicator	SI	M	
Separator (Space)	Space	M	
Supplementary Information		M	Free Text
End of line	<≡	M	

5.7.10 NAC–Not Actioned

Example:

```
ASM
LT
17NOV00026E001/LY0005/21NOV
NAC
003 AIRCRAFT TYPE INVALID
005 TIME INVALID
LONABCR
.FRASPLH 170540NOV01
ASM
LT
17NOV00026E001/LY000/5/21NOV
NEW
IC953/19SEP
J 32T DW
BLR0045 MAA0130 7//S
MAA0265 KUL0820 7//S
MAAKUL 99/2
```

Data Element	Data Element Example	Status	Use and Explanatory Notes
Message Heading			
Standard Message Identifier	ASM	M	
End of line	<≡	M	
Time Mode	LT	C	If data element not provided assume UTC
End of line	<≡	C	Mandatory if Time Mode included
Message Reference			If included in the original ASM, the Message Reference line in the NAC sub-message should exactly match the Message Reference line sent in the original ASM
Message Sequence Reference	17NOV00026E001	C	The Data Element is composed of: Date of Message (nnaaa); Message Group Serial Number (nnnnn); Continuation/End Code (a); Message Serial Number (nnn).
Creator Reference	/LY0005/21NOV	C	If included, must begin with a slash (/)
End of line	<≡	C	Mandatory if any of above elements included
Action Information			
Action Identifier	NAC	M	
End of line	<≡	M	
Reject Information			
Blank Line Separator	<≡	M	
Error Line (First)	003	M	Line number on which the error was found. The line number 000 applies when the error found is not related to a specific line in the message received. The line count starts at the first mandatory line (i.e. the Action Identifier) in the repeated message or sub-message originally received.
Separator (Space)	Space	M	
Reject Reason (First)	AIRCRAFT TYPE INVALID	M	Maximum of 1 line of error text per error line.
End of line	<≡	M	

Data Element	Data Element Example	Status	Use and Explanatory Notes
Error Line (Other)	005	**O**	Line number on which the error was found. The line number 000 applies when the error found is not related to a specific line in the message received. The line count starts at the first mandatory line (i.e. the Action Identifier) in the repeated message or sub-message originally received.
Separator (Space)	Space	C	Mandatory if Reject Reason (Other) included
Reject Reason (Other)	TIME INVALID	C	
End of line	<≡	C	Mandatory if Reject Reason (Other) included
Other Errors		C	If required, repeat from Error Line (Other)
Repeat of Rejected Message		M	
Blank Line Separator	<≡	M	
Message Lines before Action Identifier		O	Optional Message Information prior to Action Identifier. Data structure is:
	LONABCR		Message Address
	.FRASPLH 170540NOV01		Message Originator and Time Stamp
	ASM		Standard Message Identifier
	LT		Time mode (if data element not provided assume UTC)
	17NOV00026E0 01/LY0005/ 21NOV		Message Reference
Message Lines from Action Identifier	NEW	M	Action Information
	IC953/19SEP		Flight Information
	J 32T DW		Equipment Information
	BLR0045 MAA0130 7//S		Leg Information
	MAA0625 KUL10820 7//S		
	MAAKUL 99/2		Segment Information
End of line	<≡	M	

5.7.11 RRT–Change of Routing

Example:

```
ASM
LT
27JUL00107C003/REF 32/102
RRT OPER
DL038A/05 JFK/STR
G 310 PJYBM/POJO.PJM N813DL 3/UA 4/UA 5/DL 6/DL104/06
JFK1745/1730 VIE0745/0800 1/DL/UA 7/PDB/JDB/YD/BD/MD
JFKVIE 8/Z/170/B
JFKQQQ 99/3
```

Data Element	Data Element Example	Status	Use and Explanatory Notes
Message Heading			
Standard Message Identifier	ASM	M	
End of line	<≡	M	
Time Mode	LT	C	If data element not provided assume UTC
End of line	<≡	C	Mandatory if Time Mode included
Message Reference			
Message Sequence Reference	27JUL00107C003	C	Mandatory if a long message is split into parts. The Data Element is composed of: Date of Message (nnaaa); Message Group Serial Number (nnnnn); Continuation/End Code (a); Message Serial Number (nnn).
Creator Reference	/REF 32/102	O	If included, must begin with a slash (/)
End of line	<≡	C	Mandatory if any of above elements included
Action Information			
Action Identifier	RRT	M	
Secondary Action Identifier		O	Any of the Secondary Action Indentifiers ADM, CON, EQT or TIM may be included after RRT. If included, each must be preceded by a slash (/).
Separator (Space)	Space	C	Mandatory if Change Reason(s) included
Change Reason(s)	OPER	O	May be repeated. If repeated, each repeat must be preceded by a slash (/).
End of line	<≡	M	

Data Element	Data Element Example	Status	Use and Explanatory Notes
Flight Information			*Flight Information may be repeated on a separate line for different flights with identical information*
Flight Identifier	DL038A/05	M	The Data Element structure is: Airline Designator; Flight Number; Operational Suffix (if applicable); Flight Identifier Date preceded by a slash (/) with Optional Month (aaa) and Year (nn). The Airline Designator, Flight Number and Operational Suffix (if applicable) may be repeated if operated under the same Flight Identifier Date. Each repetition must be preceded by a slash (/). A common Airline Designator may be omitted in repetition.
Separator (Space)	Space	M	Mandatory if the next element included
Flight Leg(s) Change Identifier	JFK/STR	C	Mandatory for operational flights or flights scheduled to be in the operational phase)
End of line	<≡	M	
Equipment Information			*The full Aircraft Information is to be stated if a new Station, or new Equipment Information for any existing Station, is to be included in the routing.* *Mandatory also if any of the Optional data elements are used.*
Service Type	G	C	
Separator (Space)	Space	C	
Aircraft Type	310	C	
Separator (Space)	Space	C	
Passenger Reservations Booking Designator	PJYBM	C	If the Passenger Reservations Booking Designator is not stated, then the Aircraft Configuration/ Version must be stated
Passenger Reservations Booking Modifier	/POJO	C	If included, must start with a slash (/)
Aircraft Configuration/Version	.PJM	C	If included, must start with a period (.).

Data Element	Data Element Example	Status	Use and Explanatory Notes
			If the Aircraft Configuration/Version is not stated then the Passenger Reservations Booking Designator must be stated
Separator (Space)	Space	C	Mandatory if the next element included
Aircraft Registration	N813DL	O	
Separator (Space)	Space	C	Mandatory if the next element included
Operating Airline Disclosure—Code Share (DEI 2)		C	If applicable, applies to all legs subsequently stated. Not applicable if Operating Airline Disclosure—Shared Airline or Wet Lease Designation (DEI 9) is stated below.
Separator (Space)	Space	C	Mandatory if the next element included
Aircraft Owner (DEI 3)	3/UA	C	If applicable
Separator (Space)	Space	C	Mandatory if the next element included
Cockpit Crew Employer (DEI 4)	4/UA	C	If applicable
Separator (Space)	Space	C	Mandatory if the next element included
Cabin Crew Employer (DEI 5)	5/DL	C	If applicable
Separator (Space)	Space	C	Mandatory if the next element included
Onward Flight (DEI 6)	6/DL104/06	O	
Separator (Space)	Space	C	Mandatory if the next element included
Operating Airline Disclosure—Shared Airline or Wet Lease Designation (DEI 9)	9/LH	C	If applicable, applies to all legs subsequently stated. Not applicable if Operating Airline Disclosure—Code Share (DEI 2) is stated above.
End of line	<≡	M	
Leg Information			*Leg Information may be repeated on a separate line for the next leg/group of consecutive legs.* *If the Equipment Information for such legs is different, the Equipment Information is repeated first.*
Departure Station	JFK	M	
Scheduled Time of Aircraft Departure (Aircraft STD)	051745	M	Must be preceded by the date if different from the Flight Identifier Date.

Data Element	Data Element Example	Status	Use and Explanatory Notes
			The specification of the date is Mandatory if any of the dates within a sub-message is different from the Flight Identifier Date.
Scheduled Time of Passenger Departure (Passenger STD)	/1730	C	If included, must begin with a slash (/)
Separator (Space)	Space	M	
Arrival Station	VIE	M	
Scheduled Time of Aircraft Arrival (Aircraft STA)	060745	M	Must be preceded by the date if different from the Flight Identifier Date. The specification of the date is Mandatory if any of the dates within a sub-message is different from the Flight Identifier Date.
Scheduled Time of Passenger Arrival (Passenger STA)	/0800	C	If included, must begin with a slash (/)
Separator (Space)	Space	C	Mandatory if the next element included
Joint Operation Airline Designators (DEI 1)	1/DL/UA	C	If applicable. Minimum of 2 and Maximum of 2 with each preceded by a slash (/).
The following data element may be stated here if not already been stated under Equipment Information: Operating Airline Disclosure—Code Share (DEI 2) Aircraft Owner (DEI 3); Cockpit Crew Employer (DEI 4); Cabin Crew Employer (DEI 5); Onward Flight (DEI 6)			If stated, applicable to this leg only.
Separator (Space)	Space	C	Mandatory if the next element included
Meal Service Note (DEI 7)	7/PDB/JDB/YD/BD/MD	O	If required
Separator (Space)	Space	C	Mandatory if the next element included
This data element may be stated here if it has not already been stated under Equipment Information; Operating Airline Disclosure—Shared Airline or Wet Lease Designation (DEI 9)		C	
End of line	<≡	M	

Data Element	Data Element Example	Status	Use and Explanatory Notes
Segment Information			*If applicable, the information is composed of either the Traffic Restriction Note or the optional/conditional other Segment Information.* *Additional Segment Information may be repeated on separate lines.*
Traffic Restriction Note (DEI 8)	`JFKVIE 8/Z/170/B`	C	If applicable
or			
Other Segment Information	`JFKQQQ 99/3`	C	If applicable
End of line	<≡	C	Mandatory if one of above elements included
Sub-Message Supplementary Information		O	
Supplementary Information Indicator	`SI`	M	
Separator (Space)	`Space`	M	
Supplementary Information		M	Free Text
End of line	<≡	M	
Sub-Message Separation	//	C	Applicable if additional sub-messages are required or if Supplementary Information for Whole Message follows. *For more sub-messages, repeat from applicable Action Information.*
End of line	<≡	C	Mandatory if Sub-Message Separation included
Supplementary Information for Whole Message		O	
Supplementary Information Indicator	`SI`	M	
Separator (Space)	`Space`	M	
Supplementary Information		M	Free Text
End of line	<≡	M	

5.7.12 TIM–Change of Time Information

Example:

```
ASM
LT
13JAN00033E002/REF 910/33
TIM COMM
CX100B/20
BNE1010/1000 HKG1955/2005 7/PLD/CLD/YLD
BNEHKG 810/IN FLIGHT MOVIE
```

Data Element	Data Element Example	Status	Use and Explanatory Notes
Message Heading			
Standard Message Identifier	ASM	M	
End of line	<≡	M	
Time Mode	LT	C	If data element not provided assume UTC
End of line	<≡	C	Mandatory if Time Mode included
Message Reference			
Message Sequence Reference	13JAN00033E0023	C	Mandatory if a long message is split into parts. The Data Element is composed of: Date of Message (nnaaa); Message Group Serial Number (nnnnn); Continuation/End Code (a); Message Serial Number (nnn).
Creator Reference	/REF 910/33	O	If included, must begin with a slash (/)
End of line	<≡	C	Mandatory if any of above elements included
Action Information			
Action Identifier	TIM	M	
Secondary Action Identifier		O	The Seconday Action Indentifiers ADM may be included after TIM preceded by a slash (/) If included, each must be preceded by a slash (/).
Separator (Space)	Space	C	Mandatory if Change Reason(s) included
Change Reason(s)	COMM	C	May be repeated. If repeated, each repeat must be preceded by a slash (/).
End of line	<≡	M	

Data Element	Data Element Example	Status	Use and Explanatory Notes
Flight Information			*Flight Information may be repeated on a separate line for different flights with identical information*
Flight Identifier	CX100B/20	M	The Data Element structure is: Airline Designator; Flight Number; Operational Suffix (if applicable); Flight Identifier Date preceded by a slash (/) with Optional Month (aaa) and Year (nn).
End of line	<≡	M	
Leg Information			*Routing or Leg Information may be repeated on a separate line for the next leg/group of consecutive legs*
Departure Station	BNE	M	
Scheduled Time of Aircraft Departure (Aircraft STD)	1010	M	Must be preceded by the date if different from the Flight Identifier Date. The specification of the date is Mandatory if any of the dates within a sub-message is different from the Flight Identifier Date.
Scheduled Time of Passenger Departure (Passenger STD)	/1000	C	If included, must begin with a slash (/)
Separator (Space)	Space	M	
Arrival Station	HKG	M	
Scheduled Time of Aircraft Arrival (Aircraft STA)	1955	M	Must be preceded by the date if different from the Flight Identifier Date. The specification of the date is Mandatory if any of the dates within a sub-message is different from the Flight Identifier Date.
Scheduled Time of Passenger Arrival (Passenger STA)	/2055	C	If included, must begin with a slash (/)
Separator (Space)	Space	C	Mandatory if the next element included
Meal Service Note (DEI 7)	7/PLD/CLD/YLD	O	
End of line	<≡	M	

Data Element	Data Element Example	Status	Use and Explanatory Notes
Segment Information		O	*Additional Segment Information may be repeated on separate lines*
Segment Information	`BNEHKG 810/INFLIGHT MOVIE`	M	If applicable. Only Data Element Identifiers 97, 800-999 are allowed.
End of line	<≡	M	Mandatory if one of above elements included
Sub-Message Supplementary Information		O	
Supplementary Information Indicator	`SI`	M	
Separator (Space)	`Space`	M	
Supplementary Information		M	Free Text
End of line	<≡	M	
Sub-Message Separation	//	C	Applicable if additional sub-messages are required or if Supplementary Information for Whole Message follows. *For more sub-messages, repeat from applicable Action Information*.
End of line	<≡	C	Mandatory if Sub-Message Separation included
Supplementary Information for Whole Message		O	
Supplementary Information Indicator	`SI`	M	
Separator (Space)	`Space`	M	
Supplementary Information		M	Free Text
End of line	<≡	M	

5.8 Additional Message Examples

5.8.1 NEW–Insertion of New Flight Information

Example of Flight Information repetition:

```
ASM
LT
24MAY00144E003/REF/123/449
NEW COMM
LX600/12APR
LX600/13APR
G M80 FCYML.F10C30M75
GVA1830 FRA1945
```

Example of Meal Service note with more than 5 classes and with a repetition of DEI 109:

```
ASM
LT
09OCT00531E001/
NEW
BA2268/01DEC08
J 320 CDZFYSBRKVLUMHQAWTENI.C22Y132
CDG1320 MAN1350 7/XX
CDGMAN 10/AZ3538/UX3503
CDGMAN 98/2
CDGMAN 99/2E
CDGMAN 109/CM/DM/ZM/FM/YM/SM/BM/RS/KS/VS/LS/US/MS/HS/QS/AS
CDGMAN 109/WS/TS/ES/NS/IS
CDGMAN 503/9
CDGMAN 505/ET
```

Example of repetition of Leg Information (multi-leg flight):

```
ASM
LT
24MAY00144E003/REF 123/449
NEW COMM
LX600/12APR
G M80 FCYML.F10C30M75
GVA1830 FRA1945
FRA2030 HAM2130
```

Example of repetition where Equipment Information varies by Leg:

```
ASM
LT
24MAY00144E003/REF 123/449
NEW COMM
LX600/12APR
J M80 FCYML.F10C30M75
GVA1830 FRA1945
J 320 FCYMKLQV.F10C30M75
FRA2030 HAM2130
GVAHAM 101/FCYMKL
```

Example of use of Aircraft Configuration/Version only (no PRBD):

```
ASM
LT
24MAY01144E003/REF 123/449
NEW COMM
LX2429/12JUN
C 320 .Y150VVLX320
HEL1615 ZRH1800

ASM
LT
24MAY01144E003/REF 123/449
NEW COMM
LX2429/12JUN
Q 320 .F32Y200K93PP20
HEL1615 ZRH1800

ASM
LT
24MAY01144E003/REF 123/449
NEW COMM
LH8015/12JUN
F 320 .PP10
HEL1615 ZRH1800
```

```
ASM
LT
24MAY01144E003/REF 123/449
NEW COMM
LX3549/12JUN
J 320 .F014Y119VVT3M33
HEL1615 ZRH1800

ASM
LT
24MAY01144E003/REF 123/449
NEW COMM
LX2429/12JUN
C 320 .PPVVT3M33
HEL1615 ZRH1800
```

Example with day change (at end of the month and midnight arrival):

```
ASM
LT
12MAR01020E001
NEW
LX1182/31MAR04
J 343 FJCDIYSMLHNKBVQWOR.FCYVV343S1
ZRH311215 BKK312400
BKK010055 SIN010415
```

5.8.2 CNL–Cancellation

Example of Flight Information repetition where more than one flight is cancelled on the same Flight Identifier Date:

```
ASM
UTC
13JUN00901E002/REF 150/212
CNL CREW
AA407/408/409/410/27APR
```

5.8.3 EQT–Change of Equipment Information

Example of use of Aircraft Configuration/Version only (no PRBD):

```
ASM
LT
24MAY01144E003/REF 123/449
EQT TECH
LX2429/02JUN
C 320 .Y150VVLX320
```

5.8.4 TIM–Change of Time Information

Example of a time change with a day change:

```
ASM
UTC
12MAR30024E001
TIM
SN206/30MAR04
CKY302155 DKR310015
DKR310105 BRU310610
```

CHAPTER 6—AIRPORT COORDINATION PROCEDURES

6.1 INTRODUCTION

6.2 PRINCIPLES AND RULES

6.2.1 Using email for Messages
Plain Text
No Attachments
Headers
Footers

6.3 STANDARD PROCEDURES AND MESSAGES

6.3.1 Slot Allocation Procedures
SAL (Slot Initial Allocation List) Message
SCR (Slot Clearance Request/Reply) Message
SHL (Slot Historic List) Message

6.3.2 Schedule Movement Procedures
SAL (Schedule Initial Advice List) Message
SMA (Schedule Movement Advice) Message

6.3.3 Slot/Schedule Information Request Procedures
SAQ (Slot/Schedule Availability Query) Message
SIR (Slot/Schedule Information Request/Reply) Message

6.3.4 Waitlist Procedures
WCR (Waitlist Change/Reply) Message
WIR (Waitlist Information Request/Reply) Message

6.4 MESSAGE STANDARDS

6.4.1 Introduction and Message Composition

6.4.2 Message Heading
Standard Message Identifier (SMI)
Creator Reference Line
Applicable IATA Season
Date of Message
Airport concerned
Optional Incoming Message Reference

6.4.3 Information Data Lines
Action Code
Flight Information
Period/Frequency Information
Equipment Information
Routing and Time Information
Service Type
Frequency Rate

6.4.4 Additional Information Data Lines
Aircraft Registration
Cleared Times
Coordinator Reason
Minimum Ground Time
Reference Number
Requested Timings
Passenger Terminal Identifiers
Status Information
Timing Flexibility Indicator
6.4.5 Message Footer

6.5 MESSAGE SPECIFICATIONS
Header Information Validation
Information Data Line Validation
Additional Information Data Line Validation
SAL Message Specification
SAQ Message Specification
SCR Message Specification
SCR-E Message Specifications
SHL Message Specifications
SIR Message Specifications
SIR-Q Message Specifications - Request by Airline
SMA Message Specifications
SMA-E Message Specifications
WCR Message Specifications
WIR Message Specifications
WIR-Q Message Specifications

6.6 ACTION CODES
6.6.1 Introduction
6.6.2 Message and Action Code Listing
SAL Message
SAQ Message
SCR Message
SHL Message
SIR Message
SMA Message
WCR Message
WIR Message
6.6.3 Codes used by Airlines
A Acceptance of an Offer—No Further Improvement Desired
B New Entrant
C Data to be Changed for an Operational Reason or towards the Initial Requested time of the Airline or Data to be Changed or Waitlist to be Changed for an Operational Reason
D Delete Data
E Eliminate Data

F Historics
I Revised Data (Continuation from Previous Adjacent Season)
L Revised Data (No Offer Acceptable)
M Data to be Change for Reason other than Action Code C or Waitlist to be Changed for any Reason other than under Action Code C
N New Data or New Waitlist Request
P Acceptance of an Offer—Maintain Waitlist
Q Request for Information
R Revised Data (Offer Acceptable) or Revised Waitlist Request
V New Entrant with Year Round Status
Y New Data (Continuation from Previous Adjacent Season)
Z Decline Offer or Remove from Coordinators or Facilitators Database

SCR Procedures

SMA Procedures

WCR Procedure

6.6.4 Codes to be used by the Airport Coordinator or Facilitator

H Holding, Return to Historic, Eligible for Historic Precedence or Holding (Voluntary Adjustment Offer)
I Availability Information
K Confirmation
O Offer or Offer (Voluntary Adjustment)
P Pending Action or Advice
P Pending for Improvement
T Allocated Subject to Conditions
U Refusal, Not Eligible for Historic Precedence, No Slot Allocated or Not Confirmed
W Unable to Reconcile Flight Information
X Cancellation or Removed/Deleted from Waitlist

6.7 INCORRECTLY FORMATTED MESSAGES

6.8 SLOT ALLOCATION PROCEDURES

6.8.1 Initial Coordination Procedures

6.8.1.1 Historic Slot Determination Procedure
6.8.1.2 Airline Procedures for Filing for a New Season
6.8.1.3 Maintain Historics
F Procedure
6.8.1.4 Modify Historics
C/R or **M/R** Procedure—Offers Acceptable
C/L or **M/L** Procedure—Offers Not Acceptable
C/I or **M/I** Procedure—Continuation from Previous Adjacent Season—Offers Acceptable
6.8.1.5 New Slots and/or New Entrants Filings
N Procedure—New Slot
B Procedure—New Slot with New Entrant Status
V Procedure—New Slot with New Entrant Status with Year Round Status (Continuation from Previous Adjacent Season)
Y Procedure New Slot with Year Round Status—(Continuation from Previous Adjacent Season)

6.8.2 Coordinator Response: Initial Slot Allocation (SAL)

6.8.2.1 Maintain Historics
Response to **F** Procedure

6.8.2.2 Response to **C/R** or **M/R** and **C/I** or **M/I** Procedures—Offer Acceptable
Confirmation
Offer
Holding
Allocated Subject to Conditions
Refusal

6.8.2.3 Response to **C/L** or **M/L** Procedure—No Offer Acceptable
Confirm
Holding

6.8.2.4 Response to New Requests
Confirm
Offer
Allocated Subject to Conditions
Refusal

6.8.3 Airline Action Prior To SC

6.8.4 Coordinator Action Prior To SC

6.8.5 During or After the SC Coordination Procedures—Airline Filing Procedures

6.8.5.1 Modify Existing Clearances
C/R or **M/R** Procedure—Offers Acceptable
C/L or **M/L** Procedure—Offers Not Acceptable
C/I or **M/I** Procedure—Continuation from Previous Adjacent Season—Offers Acceptable
Modify a Clearance Previously Allocated Subject to Conditions

6.8.5.2 New Requests and/or New Entrants

6.8.5.3 Delete

6.8.5.4 Eliminate

6.8.6 During or After the SC Coordination Procedures—Coordinator Response to Airline Filing

6.8.6.1 Response to **C/R** or **M/R** and **C/I** or **M/I** Procedures—Offer Acceptable
Confirmation
Holding—Offer Possible
Offer Possible
Offers Possible before and after Request
Holding—No Offer Possible

6.8.6.2 Response to **C/L** or **M/L** Procedure; No Offer Acceptable
Confirmation
Holding

6.8.6.3 Response to Modify a Clearance Previously Allocated Subject to Conditions

6.8.6.4 Response to New Requests
Confirm
Unable—Offer Possible
Offer Possible
Offers Possible before and after Request
Pending

Allocated Subject to Conditions
Unable
6.8.6.5 Response to **D** and **E** Procedures
Confirmation

6.8.7 Airline Response During or After SC
6.8.7.1 Modify Existing Clearances and New/New Entrant
Acceptance
Acceptance with Improvement
Decline Offer

6.8.8 Coordinator Response During or After SC
6.8.8.1 Modify Existing Clearances (**C/R, M/R, C/I, M/I** Procedures)
6.8.8.2 New/New Entrant

6.8.9 Acknowledgement of the Airline Filing by the Coordinator

6.8.10 Action Code T—Conditions met/not met Coordinators Responses

6.9 USE OF SPECIAL REFERENCE—//BLOCK OR //SWAP
//BLOCK—C/L, M/L, C/R or M/R Procedure to Exchange Arrival and Departure Clearances
//BLOCK—D/N with C/L, M/I, C/R or M/R Procedures
//SWAP—C/L or M/L Procedure to Exchange Clearances

6.10 SMA PROCEDURES

6.10.1 SMA—Airline Filing Procedures
6.10.1.1 New Requests
6.10.1.2 **C/R** Procedure—Change Requests
6.10.1.3 Delete or Eliminate

6.10.2 Facilitator Response to Airline SMA Request
6.10.2.1 Response to **C/R** Procedure—Offer Acceptable
Confirmation
Holding—Voluntary Adjustment Offer
Unable—Not confirmed
Allocated Subject to Conditions
6.10.2.2 Response to New Requests
Confirm
Unable—Voluntary Adjustment Offer
Allocated Subject to Conditions
6.10.2.3 Response to **D** and **E** Procedures
Confirmation

6.10.3 Airline Response to Offers by Facilitator
6.10.3.1 Airline Response to an Offer
Acceptance
Acceptance with Improvement
Decline Offer

6.10.4 Facilitator Response
Response to an Offer on a **C/R** Change Request
Response to an Offer on a New Request

6.10.5 SAL Procedures
Confirm
Offer—Voluntary adjustment
Not Confirmed
Exceptions

6.11 SIR AND SAQ PROCEDURES

6.11.1 SAQ Procedure
Airline Request for Information on New Slot Allocation
Airline Request for Information on Revised Clearance
Coordinator Response to Request for Availability Information
Use by Coordinator in SIR Procedures

6.11.2 SIR Procedure
Airline Request
Coordinator and Facilitator Response

6.12 WAITLIST PROCEDURES

6.12.1 SCR Waitlist Procedure
6.12.1.1 Initial (SCR) Coordination Procedures
New Service or **C/L** or **M/L** Procedures
C/R, M/R, C/I and **M/I** Procedures
6.12.1.2 During or After the SC Procedures
New Request Procedures
C/L or **M/L** Procedures
C/I, M/I, C/R and **M/R** Procedures

6.12.2 WIR Procedures
Airline WIR
Coordinator Reply to WIR

6.12.3 WCR Procedure
6.12.3.1 Airline WCR
C/R or **M/R** Procedure—Revision to Waitlist
N Procedure—New Addition to Waitlist Database
Z Procedure—Delete from Waitlist
6.12.3.2 Coordinator Response to WCR—**C/R** Procedure
Pending—Able to Confirm
Pending—Unable to Confirm
Pending—Unable to Reconcile Flight Information
6.12.3.3 Coordinator Response to WCR—**N** Procedure
Pending—Able to Confirm
Pending—Unable to Confirm
6.12.3.4 Coordinator Response to WCR—**Z** Procedure
Cancellation—Able to Confirm
Cancellation—Unable to Reconcile Flight Information

6.12.4 Coordinator Initiated SCRs and Waitlisted Times

6.12.5 Airline SCR/SMAs and Waitlisted Time Updates

6.1 Introduction

The Worldwide Slot Guidelines (WSG) is published by IATA to provide the global air transport community with a single set of standards for the management of airport slots. The management of airport slots is required at some airports where the available airport infrastructure is insufficient to meet the demand of airlines and other aircraft operators. Airports are designated by the responsible authorities as Level 1, 2 or 3 based on their level of congestion.

The standard message formats of this Chapter allow airlines, coordinators and facilitators to exchange airport coordination information electronically.

The message formats form an iterative (sequential) set of request and reply messages designed to provide as much clarity as possible for the message users. The messages can be processed either by computer or by manual methods.

The rules and composition of the messages, with detailed specifications and examples, are explained in the following Sections of this Chapter.

For more information on the coordination process and the IATA Slot Conferences (SC), refer to the WSG and www.iata.org/wsg.

A copy of the WSG and a list of the Level 3 and Level 2 airports can be found at www.iata.org/wsg.

6.2 Principles and Rules

It is strongly recommended that airlines, coordinators or facilitators adhere to the rules for the construction of the standard messages as described in this Chapter.

The common rules for the data elements as described in Chapter 2 of this Manual should also be followed.

- All dates, days and times are in UTC.

  However, while the standard is UTC, airlines and coordinators may, on a bilateral basis, exchange information in Local Time.
- The messages may contain data defined by either period/season (flights with regular frequency) or by single dates (individual flights). Both formats are described in this Chapter.

  They can be used jointly or separately.
- Period of operation may not be open-ended (use of "`00XXX`" as start or end dates is not permitted).

  An SCR/SMA message must include data relevant to the Level 3 or Level 2 airport for flights that start or end outside the Period of Operation or Season.

  The Period of Operation will always reflect the date/time of operation at the airport where the SCR/SMA is made.

  → *For further guidance, refer to Appendix H: SCR/SMA for Flights Partly out of Season*.
- Coordinators and facilitators will respond to requests within 3 business days.

  Unless stated otherwise, offers from coordinators or facilitators to the airlines are valid for 3 business days only.

  If an airline has not accepted the offer within the 3-day time limit, the offer may be canceled.
- When an airport has no apron or terminal capacity constraints, the Aircraft Group Code for Aircraft Types (SSIM Appendix A) may be used.
- When submitting an SCR/SMA for 'full season' operations with less than daily frequency, airlines may use the start and end dates of the season even if these are not the actual dates of operation.

However, when the Frequency Rate is used to indicate that a flight operates at fortnightly intervals (every 2 weeks), the start date of the Period of Operation must be the first date of operation, and the end date must be the last date of operation.

- There can only be one arrival and one departure with a particular flight designator on a given date at an airport.

  If, for planning or ad hoc operational reasons, the same Flight Designator is used on the same UTC date, one flight should be filed using the Operational Suffix '**Z**'.

  Whenever a flight is filed with an Operational Suffix, this flight should retain the Operational Suffix in all future SCR/SMA messages. This should be provided even when changes mean that the Operational Suffix is no longer be required.

  If there is a significant risk that the need to use Operational Suffices will recur, or if an Operational Suffix is needed for an entire period, it is advisable to use different Flight Designators for these flights.

  Airlines should ensure that once the Operational Suffix is used, it should be maintained in their system.

- When a coordinator or facilitator requires filings as turnarounds or when airlines elect to file flights as turnarounds (i.e. arrival and departure in a single data record), any modifications pertaining to either the arrival or departure require all unchanged elements to be repeated in order to maintain the turnaround link.

  Flights that are not turnaround flights (positioning to a hangar and then repositioning later to a gate) or flights for which no dedicated link can be given (e.g. flights of airlines at their home base) should be filed using separate arrival and departure formats.

  If flights are originally filed using an overmidnight indicator, any subsequent change should again be filed using the turnaround format.

  If existing clearances have been recorded as turnaround flights with historic rights, airlines may request the coordinator to provide individual records for the arrival and for the departure flight, i.e. unlink the (turnaround) flights.

  This procedure allows airlines to exchange parameters between flights and to maintain the historic rights to the flights. Requests to unlink historic flights are undertaken on a bilateral basis between airlines and coordinators **and** must be submitted to the coordinator before the deadline for the distribution of the Slot Historic List message (SHL) to the airline.

- An airline may decide that the response message from a coordinator or facilitator should be sent to a message address that is different from where the (airline) request message was sent to the airport coordinator or facilitator.

  This may be undertaken on a bilateral basis and it is the responsibility of the airline to ensure that the coordinators are fully aware of the situation.

  Coordinators and facilitators will normally respond to all originating message addresses of the requesting airline.

- If an airline is unable to attend the SC, it should reply to the Slot Initial Allocation List message (SAL) prior to the SC.

  If the coordinator or facilitator has responded with more than one offer for a specific request, the airline should indicate which offer is being accepted.

- Although the standards and formats used in this Chapter were initially designed for use with Type B messages, all the standards and formats are applicable to the use of emails, computer printouts, web data displays and any other media. Some additional standards apply when using email (see 6.2.1 below).

  Plain text files should be used and must not contain any special formatting information.

Each text file should contain information for only one airport, the standard message headings should appear before information lines, and supplementary information should continue to be indicated by using SI or GI lines as applicable.

When using Type B messages, the maximum line lengths and maximum message lengths constraints must be followed. However, when using other media, there is no requirement to split data lines or messages into separate parts.

6.2.1 Using email for Messages

The standards and formats used in this Chapter apply when using email for sending messages. In addition, when using email, the following apply:

Plain Text

Only plain text should be used in the message.

No special characters or formatting information should be used in the message.

No Attachments

There should be no attachments to the message.

The message formatted according to this Chapter should be placed directly in the email body.

Headers

There should be no non-standard text before the information in the body of the message.

The email body must start with the standard format header.

The email body must be according to the standard format.

When using email the email address of the originator must be specified in the Creator Reference Line. See section 6.4.2 for details.

Examples

Not Allowed

Dear AENA,

Please change my morning slot as indicated below.

```
SCR
/yusuf.mauladad@zz-airlines.com
W07
15JUN
MAD
CZZ802 ZZ811 26OCT27MAR 1234567 290AB3 BCN0910 1030BCN JJ
RZZ802 ZZ811 26OCT27MAR 1234567 290AB3 BCN0850 1010BCN JJ
GI
```

Thanks.

Regards,

Yusuf.

Allowed

```
SCR
/yusuf.mauladad@zz-airlines.com
W07
15JUN
MAD
CZZ802 ZZ811 26OCT27MAR 1234567 290AB3 BCN0910 1030BCN JJ
RZZ802 ZZ811 26OCT27MAR 1234567 290AB3 BCN0850 1010BCN JJ
GI
```

Changes requested for my morning slot.

Thanks.

Regards,

Yusuf.

Footers

If there is any non-standard format footer text in the body of the message it must be preceded by a GI line.

This is especially important if the email system automatically adds signature lines, privacy notices, company information, etc. to the end of messages.

Examples

Not Allowed

```
SCR
/yusuf.mauladad@zz-airlines.com
W07
15JUN
MAD
CZZ802 ZZ811 26OCT27MAR 1234567 290AB3 BCN0910 1030BCN JJ
RZZ802 ZZ811 26OCT27MAR 1234567 290AB3 BCN0850 1010BCN JJ
```

My phone number is +1-682-605-4394

This message is private and confidential.

Please visit our web-site at www.zz-airlines.com.

Allowed

```
SCR
/yusuf.mauladad@zz-airlines.com
W07
15JUN
MAD
CZZ802 ZZ811 26OCT27MAR 1234567 290AB3 BCN0910 1030BCN JJ
RZZ802 ZZ811 26OCT27MAR 1234567 290AB3 BCN0850 1010BCN JJ
GI
```

My phone number is +1-682-605-4394

This message is private and confidential.

Please visit our web-site at www.zz-airlines.com.

6.3 Standard Procedures and Messages

There are four distinct sets of procedures defined within this Chapter and each set contains its own set of message specifications.

Each of the messages has a specific functionality with the defined procedures.

Each of the procedures and applicable messages are described below.

6.3.1 Slot Allocation Procedures

The slot allocation procedures are undertaken by airlines and airport coordinators at Level 3 airports.

→ *Refer to Section 6.8 for detailed procedures*

The Standard Message Identifiers (SMI), names and functions of the slot allocation procedure messages are:

SAL (Slot Initial Allocation List) Message

To provide an airline with the status of its slot allocation requests prior to the start of the SC.

SCR (Slot Clearance Request/Reply) Message

To handle the slot allocation process

SHL (Slot Historic List) Message

To provide an airline with a list of its flights that are eligible or not eligible for historic precedence.

6.3.2 Schedule Movement Procedures

Schedule Movement Procedures are undertaken by airlines and facilitators at Level 1 and 2 airports.

The Standard Message Identifiers (SMI), names and functions of the Schedule Movement Procedures messages are:

SAL (Schedule Initial Advice List) Message

To provide airlines with the status of planned operation requests prior to the start of the SC.

→ *Refer to Section 6.10.5 for detailed procedures*

SMA (Schedule Movement Advice) Message

To handle the planned operation procedures at Level 1 and 2 airports.

→ *Refer to Section 6.10 for detailed procedures*

6.3.3 Slot/Schedule Information Request Procedures

The Slot/Schedule Information Request procedures are undertaken by airlines, coordinators and facilitators for a specified airport.

The Standard Message Identifiers (SMI), names and functions of the Slot/Schedule Information Request procedure messages are:

SAQ (Slot/Schedule Availability Query) Message

To allow an airline to investigate the possibility of revising its current planned operations or to investigate the potential availability of new slots without impacting the clearance on hold.

SAQ may be used for the current season or for the next season.

→ *Refer to Section 6.11.1 for detailed procedures*

SIR (Slot/Schedule Information Request/Reply) Message

To allow an airline to request the status of its planned operations.

To allow a coordinator or facilitator to advise an airline—on an unsolicited basis and at any time during or after the SC—the status of its planned operations.

To allow an airline to request the status of planned operations held by one or more airlines.

SIR may not be used prior to the relevant SC.

→ *Refer to Section 6.11.2 for detailed procedures*

6.3.4 Waitlist Procedures

The Waitlist procedures are undertaken by airlines, coordinators and facilitators at a specified airport.

→ *Refer to Section 6.12 for detailed procedures*

The Standard Message Identifiers (SMI), names and functions of the Waitlist Procedure messages are:

WCR (Waitlist Change/Reply) Message

To handle the Waitlist process.

To allow the airline to request a change to its Waitlist without a change to the allocated slot data.

It also allows the addition and removal of slotted and non-slotted flights from the coordinators or facilitators database.

WIR (Waitlist Information Request/Reply) Message

To allow an airline to request and to receive a response to its enquiry regarding its own or other airlines' data.

WIR may not be used prior to the relevant SC.

To allow a coordinator or facilitator to advise an airline—on an unsolicited basis and at any time during or after the SC—the status of its Waitlist.

6.4 Message Standards

6.4.1 Introduction and Message Composition

A standard SCR/SMA procedure message represents the lowest unit of complete information that may be exchanged between an originator and a recipient for a predetermined purpose.

The technical specifications for message construction are based on the guidelines of the A4A/IATA Systems and Communications Reference Manuals. The SCR volumes are made available within the PADIS extranet site: www.iata.org/padis.

These specifications are common to all message types.

The message formats may be used by computerized users (i.e. airlines, coordinators and facilitators). The formats may also be used as compatible computer printouts, in text files and in email messages as well as being adapted for SSIM applications as electronic and teletype messages. Some additional standards apply when using email for messages (see 6.2.1 above).

The standard message is enclosed within the standard communications “envelope”, i.e. signal identifiers, serial number, priority, address, originator and date/time of transmission.

The SCR/SMA message will then read line by line by always starting at the left, i.e. left justified.

For Type B messages, the maximum line length of the message must not exceed 69 printable characters including spaces. Some systems may restrict line length limits to less than 69 characters.

When the maximum line length limit may be exceeded, the line may be extended to an additional data line that always starts with a slash (/) followed by a space.

The line may only be broken at points where the message format requires a space.

Although the Systems and Communications Reference Manual defines the maximum number of characters for one telegragh (Type B) message as 3,840, some service providers have the capability to increase this limit to 64,000 characters.

Type B users are, however, cautioned that some systems may not be able to receive or process messages with more than 3,840 characters.

This maximum length limitation takes into account all printed and non-printed characters, such as letter shifts, figure shifts and new line. Longer messages should be divided into separate parts.

Submission of more than one type of message in one transmission is not permitted.

It is recommended that no more than 20 data lines be transmitted in one message.

Each functional message consists of 4 major components:

- Message Header including the Standard Message Identifier (SMI);
- Information Data Lines (or basic data lines);
- Additional Data Information Lines (or additional data lines);
- Message Footer.

The general composition of a standard message together with general values/examples is shown in the Table below. This is followed by a detailed description of each of the components.

The Mandatory End of Line Indicator for the Message Header and Message Footer is included as "<≡".

Although the End of Line Indicator has been included for the Information Data Line and Additional Information Data Line in the Table below, refer to the Message Specifications (Section 6.5) for detailed information as End of Line Indicator may vary.

DESCRIPTION	VALUES/EXAMPLES
Message Header	
SMI	SCR<≡
Creator Reference	/REFER<≡
IATA Season	W03<≡
Date of Message	10MAY<≡
Airport	CPH<≡
Incoming Message Reference (Reply message only)	REYT/REFER<≡
Information Data Line	NAF802 AF810 26OCT27MAR 1234567 290AB3 FCONCE0910 1030LHRMAN JJ2<≡
Additional Information Data Line	/ TA.3 TD.2 FA.08500930 FD.10151040/<≡
Footer	SI IF NOT AVAILABLE PLS GIVE NEAREST POSSIBLE<≡
	GI BRGDS .....<≡

6.4.2 Message Heading

The Message Header is composed of the following elements:

Standard Message Identifier (SMI)

The Standard Message Identifier (SMI) is an IATA approved three-letter code used to uniquely identify a given type of message. It is always included as the first line of the standard message after the Message Address Envelope.

The SMIs used in these procedures are:

SAL SAQ SCR SHL SIR SMA WCR WIR

All SMIs are published in the IATA Airline Coding Directory.

Creator Reference Line

The Creator Reference line is used to indicate one or more of the following:

1. If the message is in Local Time
2. Special Handling indication
3. Acknowledgement from coordinator
4. Reference information from the originator
5. Email address of the originator which is required if the message is sent via email.

If any of the above are to be indicated they must be indicated in the relative order shown in one line. For example, if the message is in Local Time then the Local Time indication must be at the beginning of the line. Similarly, if the email address of the originator is specified it must be at the end of the line. No Creator Reference line is needed if none of the above are to be indicated.

If the message is in Local Time, this must be indicated using a double slash and should appear as "//LT". The "//LT" is used to indicate that all dates and times in the message are in Local Time.

If Special Handling is to be indicated, this is done using a double slash and should appear as "//SWAP", "//BLOCK", or "//WAITLIST".

When used by a coordinator to acknowledge filings by an airline, it should appear as "/ACK".

If Reference information from the originator is being shown, this is done using the single slash and should appear as "/REFERENCE", where REFERENCE stands for the reference text used.

If the email address is being specified, this is done using the single slash and should appear as "/HDQACXH@coordaus.com.au" for example. The Creator Reference Line is mandatory when requesting slot allocations via email and it is recommended that the following generic email address format be used:

Present teletype address@domainname.domainextension.

The generic email addresses are listed in SSIM Attachment 2. Alternatively, email addresses as bilaterally agreed between the airline and the coordinator may be used.

The following table illustrates examples of the some common uses of the Creator Reference Line:

For Only	Creator Reference Line
Creator reference NRT15DEC	/NRT15DEC
Special handling BLOCK	//BLOCK
Special handling SWAP and creator reference YM12JAN	//SWAP/YM12JAN
email address only	/HDQACXH@coordaus.com.au
Acknowledgement and creator reference S08SUB	/ACK/S08SUB
Creator reference EK13JAN and email address	/EK13JAN/HDQACXH@coordaus.com.au
Special handling and email address	//WAITLIST/HDQACXH@coordaus.com.au
Special handling, creator reference TESTMSG and email address	//WAITLIST/TESTMSG/HDQACXH@coordaus.com.au
Dates and Times In Local Time	//LT
Dates and Times in Local Time, creator reference EK14JAN and email address	//LT/EK14JAN/HDQACXH@coordaus.com.au

For Only	Creator Reference Line
Dates and Times in Local Time, special handling BLOCK, creator reference EK15JAN and email address.	//LT//BLOCK/EK15JAN/HDQACXH@coordaus.com.au

Applicable IATA Season

Northern **S**(ummer) or **W**(inter) plus 2-numerics for the year

Date of Message

DDMMM format

Airport concerned

IATA 3-letter airport code

Optional Incoming Message Reference

Only used on reply (response) messages and should be included if responding to a message that included a Creator Reference.

Always starts with “REYT/” followed by the message reference of the sender.

For an Acknowledgement (ACK) message, this may be followed by a ‘/’ and the date/time stamp of the original message.

6.4.3 Information Data Lines

The Information Data Lines consist of mandatory and conditional data elements applicable to the message function.

The Line always begins with an ‘Action Code’ and ends with the ‘Frequency Rate’ (if applicable).

The data elements included in the data line, together with examples, are shown in the table below. The status of each element within the message is defined in Section 6.5–Message Specifications.

Example

NAF802 AF810 26OCT27MAR 1234567 290AB3 FCONCE0910 1030LHRMAN JJ2

DATA ELEMENT	VALUES/EXAMPLES
Action Code	N
Flight Information	
– Arrival Flight Designator	AF802
– Departure Flight Designator	AF810
Period/Frequency Information	
– Period of Operation: From and To	26OCT27MAR
– Day(s) of Operation	1234567
Equipment Information	
– Number of Seats Fitted	290
– Aircraft Type	AB3
Routing and Time Information	
– Arrival	
Origin Airport	FCO
Previous Airport	NCE
Timings (STA)	0910

DATA ELEMENT	VALUES/EXAMPLES
Action Code	N
– Departure To: Timings (STD) Next Airport Destination Airport	 1030 LHR MAN
Service Type – Arrival – Departure Flight	 J J
Frequency Rate	2

Note: *A space (blank) between the Action Code and the Flight Information signifies that the information relates to a departure flight.*

The Data Elements that may be included within the Information Data Line with their function, use and respective position (underlined) in the Information Data Line are described below.

Action Code

The Action Code defines the 'exact' function of the message.

NAF802 AF810 26OCT27MAR 1234567 290AB3 FCONCE0910 1030LHRMAN JJ2

→ *Refer to Section 6.6.2 for a list of Action Codes and the messages where they are used*.

→ Refer to Sections 6.6.3 and 6.6.4 for a description on the use of each Action Code.

Flight Information

Flight Information data consists of one or two occurrences of the following:

- Airline Designator (2-character or 3 letter code)
- Flight Number (minimum 3 numerics and maximum 4 numerics)
- Operational suffix—if applicable

For transit/turnaround flights or linked overmidnight flights, both the arrival and departure flight information should be specified.

A single space (blank) between both flight designators is mandatory.

NAF802 AF810 26OCT27MAR 1234567 290AB3 FCONCE0910 1030LHRMAN JJ2

For an arrival flight only, the flight information directly follows the Action Code.

NAF802 26OCT27MAR 1234567 290AB3 FCONCE0910 J2

For a departure flight only, the flight information must be preceded by a blank space.

N AF810 26OCT27MAR 1234567 290AB3 1030LHRMAN J2

Period/Frequency Information

Period/Frequency Information data consists of:

- Period of Operation or Arrival Date or Departure Date
  (Date format is 2 numerics for the day of the month plus 3 letters for the month)
- Day(s) of Operation
  (not applicable for single Arrival/Departure Date(s)

NAF802 AF810 26OCT27MAR 1000000 290AB3 FCONCE0910 1030LHRMAN JJ2

Period/Frequency Information should always be preceded by a blank space in the message line.

The Period/Frequency Information relates to the date(s)/day(s) of operation at the airport.

For transit/turnaround flights or linked overmidnight flights, the Period/Frequency Information relates to the inbound flight.

If the outbound flight does not depart on the same date(s)/day(s), the overmidnight Indicator must be used (see below under Routing and Time Information).

Day(s) of Operation are indicated with the numbers 1 through 7 in the applicable position for each day of the week with Monday being Day 1.

Non-operational days are indicated by a `0` (zero) in the applicable position(s) between 1 and 7.

Example: "`0034007`" denotes operation on Wednesday, Thursday and Sunday.

There must always be a blank space between Period of Operation and Day(s) of Operation.

For single date operations, Day(s) of Operation are omitted.

For a regular operation at fortnightly intervals (every 2 weeks), the Frequency Rate must be used.

In such cases, the start date of the Period of Operation must be the first date that the flight operates, and the end date must be the last date that the flight operates.

→ *Refer to 'Frequency Rate' below for further information*.

Equipment Information

Equipment Information data consists of:

- Number of Seats

  Format is 3 numerics for passenger flights and "`000`" for cargo flights
- Aircraft Type
- Format is 3 alphanumeric characters

  → *Refer to SSIM Appendix A for valid codes*.

  `NAF802 AF810 26OCT27MAR 1234567 290AB3 FCONCE0910 1030LHRMAN JJ2`

  Equipment Information must always be preceded by a blank space. There is no blank space between Number of Seats and Aircraft Type.

  Aircraft Type Codes are recommended for use in Chapter 6 applications.

Routing and Time Information

Routing and Time Information consists of either Inbound or Outbound flight data.

Inbound flight data is used for arrival and transit/turnaround flights and consists of:

- Origin Airport
- Previous Airport
- Scheduled Time of Aircraft Arrival at the Airport

  `NAF802 AF810 26OCT27MAR 1234567 290AB3 FCONCE0910 1030LHRMAN JJ2`

Outbound flight data is used for departure and transit/turnaround flights and consists of:

- Scheduled Time of Aircraft Departure at the Airport
- Next Airport
- Destination Airport

  `NAF802 AF810 26OCT27MAR 1234567 290AB3 FCONCE0910 1030LHRMAN JJ2`

Routing and Time Information should always be preceded by a blank space.

There must also be a blank space between the inbound and outbound flights when transit/turnaround flights are quoted.

Previous and Next Airport may be omitted if they are the same as the Origin Airport or Destination Airport respectively. On a turnaround flight, this applies for arrival and departure airport information.

NAF802 AF810 26OCT27MAR 1234567 290AB3 FCO0910 1030LHR JJ2

or

NAF802 AF810 26OCT27MAR 1234567 290AB3 FCOFCO0910 1030LHRLHR JJ2

Other intermediate airports, apart from Previous Airport and/or Next Airport, need not be stated.

If the aircraft is making an overmidnight stop (passing midnight) at the airport, it is appropriate to use the overmidnight Indicator attached to the Scheduled Time of Aircraft Departure.

NBA2402 BA102 26OCT27MAR 1000000 140734 LHR1950 06001LHR JJ2

This indicates that flight BA2402 arrives on Monday and the linked flight BA102 departs on Tuesday. The underlined figure denotes how many midnights the aircraft layover encompasses; i.e. “1 night,” 2 nights etc.

Service Type

The Service Type indicates the main reason for operating a flight.

NAF802 AF810 26OCT27MAR 1234567 290AB3 FCONCE0910 1030LHRMAN JJ2

The Service Type should always be preceded by a blank space.

It is stated separately for the inbound (first code) and outbound flight (second code). A single Service Type is stated if the data line contains only an arrival flight or a departure flight.

→ *Refer to SSIM Appendix C for applicable codes*.

Frequency Rate

When a flight is operated on a regular basis but at fortnightly intervals (every 2 weeks), the Frequency Rate must be added immediately after the Service Type using value 2 (underlined on the example below). Otherwise (blank value), weekly operation is assumed.

NAF802 AF810 26OCT27MAR 1234567 290AB3 FCONCE0910 1030LHRMAN JJ2

When the Frequency rate is used, the start date of the Period of Operation must be the first date that the flight operates, and the end date must be the last date that the flight operates. The start and end dates may **not** be expressed as **“00XXX”**.

The Frequency Rate may not be used when submitting flights operating on single dates.

6.4.4 Additional Information Data Lines

The Additional Information Data Line contains optional or conditional information, generally starts on a new line and begins and ends with a slash (/).

The information within the line is constructed as a series of data elements as shown in the example and described in the table below.

Example

/ TA.3 TD.2 FA.14001530 FD.15001630/

DESCRIPTION	VALUES/EXAMPLES
Additional Element	
– Space	→
– Identification Code	TA
– Full Stop/Period	.
– Information relevant to the code	3

DESCRIPTION	VALUES/EXAMPLES
Additional Element – Space – Identification Code – Full Stop/Period – Information relevant to the code	 → FA . 14001530
Additional Elements as required	

The Identification Code is either 2 or 3 characters, must not contain spaces, and is always followed by a full stop/period.

The information relating to the code must follow the full stop/period and must not include spaces.

The 2 and 3 character Identification Codes for each element are included in SSIM Appendix J.

If the Information Data Line does not exceed 69 characters or a system line limit, the Additional Information Data Line may directly follow the Information Data Line provided that the combined line length does not exceed 69 characters.

The elements that may be included in the Additional Information data line are:

- Aircraft Registration
- Cleared Times
- Coordinator Reason
- Minimum Ground Time
- Requested Timings
- Passenger Terminal Identifier
- Reference Number
- Status Information
- Timing Flexibility Indicator

When included in a message, the recommended order for the information is:

(i) Passenger Terminal Identifier(s);

(ii) either the Cleared Times, Requested Timings or Timing Flexibility Indicator(s);

(iii) Coordinator Reason(s);

(iv) any other information as required (i.e. Aircraft Registration, Minimum Ground Time, Reference Number, Status Information).

When both arrival and departure information is included in the elements, it is recommended that the arrival information precedes the departure information.

Aircraft Registration

The use of Aircraft Registration is optional.

Aircraft Registration information starts with the identifier RE followed by a full stop/period (.) and then the two to 10 character aircraft registration.

Example

```
NYYY001 YYY002 10MAR 008BET NCE0910 0950AMS DD / RE.FGARL/
```

Cleared Times

The use of Cleared Times is optional and may only be used in the WIR message.

Cleared Times Information starts with the respective identifier (AA for Arrival and AD for Departure) followed by a full stop/period (.) and then the appropriate slot times as recorded on the coordinator database.

The Waitlist time is composed of 4 numerics followed by an optional Day Change Indicator code.

The Day Change Indicator may be included when a day change is involved and where code N indicates the Next day and code P indicates the Previous day.

Examples

```
PAF802 AF810 26OCT27MAR 1234567 290AB3 FCONCE0910 1010LHRMAN JJ2
/ TA.3 TD.2 AA.0920 AD.1035/
PZZ051 31OCT27MAR 0000500 000340 VIEVIE2355 J / AA.0015N/
PZZ054 ZZ055 01NOV27MAR 0000060 249340 VIEVIE0005 0105VIEVIE JJ
/ AA.2255P AD.2355P/
```

Coordinator Reason

The reasons why a clearance cannot be granted as requested, or why the historic eligibility has not been granted, are provided using appropriate Coordinator Reason codes.

The Reason codes are applicable to SAL, SAQ, SCR or SHL messages.

The Coordinator Reason data starts with the respective identifier (CA for the arrival reason and CD for the departure reason) followed by a full stop/period (.) and then the appropriate reason code as specified in SSIM Appendix J.

If there is no appropriate code to define the reason or if the coordinator uses Reason Code ‘UA’, the reason why the request could not be granted should be provided in a SI line.

The SI line should also be used to provide further information as necessary.

Example

```
KZZ123 ZZ124 26OCT27MAR 0000567 154734 TKU1200 1300TKU JJ
/ CA.NE CD.NE/
0ZZ257 ZZ257 26OCT28DEC 1204000 00073X DUSCGN2300 2355VIEKLU FF
/ CA.R030 CD.NA/
U ZZ187 ZZ188 03NOV 154734 MAN0805 0910MAN GP / CA.UA CD.UA/
```

Minimum Ground Time

The use of Minimum Ground Time is optional and may only be in SCR and SMA messages.

Minimum Ground Time information starts with the identifier MT followed by a full stop/period (.) and then the minimum ground time.

The minimum ground time is composed of 3 numerics to express the time in minutes.

Example

```
NAF802 AF810 26OCT27MAR 1234567 290AB3 FCONCE0910 1010LHRMAN JJ
/ MT.045/
```

Reference Number

The use of Reference Number is optional and can be used in all messages.

Reference Number information starts with the respective identifier (NA for Arrival and ND for Departure) followed by a full stop/period (.) and then the Reference Number assigned by a coordinator.

The Reference Number is composed of 1 to 10 numerics

Example

```
NAF802 AF810 26OCT27MAR 1234567 290AB3 FCONCE0910 1010LHRMAN JJ2
/ NA.200041000 ND.200041001/
```

Requested Timings

The use of Requested Timings is optional and may be used in SAL, SCR, SMA and SIR messages.

The Requested Timings elements start with the respective element identifier (RA for Arrival or RD for Departure) followed by a full stop/period (.) and then the original timings as requested by the airline and recorded in the database of the coordinator or facilitator.

The Waitlist time is composed of 4 numerics followed by an optional Day Change Indicator code.

The original requested timing(s) is composed of 4 numerics followed by an optional Day Change Indicator code.

The Day Change Indicator may be included when a day change is involved and where code **N** indicates the Next day and code P indicates the Previous day.

When the SAL data line starts with Action Code **H, O** or **U**, Requested Timings may be included.

They may **not** be included on the SAL when Action Code **U** is combined with Action Code **O**.

When a Waitlist request is held in the coordinator's or facilitator's database for improvement, the Requested Timings may be included in the SIR.

Coordinator Use Examples

```
HAF802 AF810 26OCT27MAR 1234567 290AB3 FCONCE0910 1030LHRMAN JJ2
/ TA.3 TD.2 RA.0920 RD.1010/

OZZ051 31OCT27MAR 0000500 000340 VIEVIE2355 J / RA.0015N CA.R030/
OZZ053 01NOV27MAR 0000060 000340 VIEVIE0005J / RA.2355P CA.R030/
OZZ054 ZZ055 01NOV27MAR 0000060 249340 VIEVIE0005 0105VIEVIE JJ
/ RA.2255P CA.R060 RD.2355P CD.GRD/
```

Airline Use Example

```
RAF802 AF810 26OCT27MAR 1234567 290AB3 FCONCE0910 1030LHRMAN JJ2
/ RA.0900 RD.1010/
```

Passenger Terminal Identifiers

The use of the Passenger Terminal Identifier is optional and may be used in SAL, SAQ, SCR, SIR △ and SMA messages.

The Passenger Terminal Identifier elements start with the respective element identifier (TA for Arrival or TD for Departure) followed by a full stop/period (.) and then the appropriate Passenger Terminal Indicator as specified in SSIM Appendix D.

Examples

Arrival and Departure

```
NAF802 AF810 26OCT27MAR 1234567 290AB3 FCONCE0910 1030LHRMAN JJ2
/ TA.3 TD.2 RA.0910 RD.1010/
```

Departure Only

```
N AF810 26OCT27MAR 1234567 290AB3 1030LHRMAN J / TD.2/
```

Status Information

The use of Status Information is optional and may be used by the coordinator in SAQ, SCR, SIR, SHL and SAL messages.

Status Information may be used with action code T to indicate the condition that needs to be fulfilled.

Status information may also be used in SALs to indicate an aspect of the granted slot that the coordinator wishes to make the airline aware.

Status Information starts with the respective identifier (SA for Arrival and SD for Departure) followed by a full stop/period (.) and then the relevant status information for a flight in free text format.

Status Information is a free text field composed of 1 to 10 characters and must not contain spaces.

Examples

```
KAF802 AF810 26OCT27MAR 1234567 290AB3 FCONCE0910 1030LHRMAN JJ2
/ SA.NEWENTRANT SD.NEWENTRANT/
TAF802 AF810 26OCT27MAR 1234567 290AB3 FCONCE0910 1030LHRMAN JJ2
/ SA.LICENCE SD.LICENCE/
```

Timing Flexibility Indicator

The use of Timing Flexibility Indicator is optional and may be used in SCR and SIR messages.

The Timing Flexibility Indicator elements start with the respective identifier (FA for Arrival Flexibility or FD for Departure Flexibility) followed by a full stop/period (.) and then the appropriate Timing Flexibility Indicator.

This is composed of 8 characters beginning with 4 characters for the earliest possible timing followed by 4 characters for the latest possible timing.

Example

```
NAF802 AF810 26OCT27MAR 1234567 290AB3 FCONCE0910 1030LHRMAN JJ2
/ TA.3 TD.2 FA.08500920 FD.10101050/
```

If the airline can accept a timing flexibility that exceeds the Day of Operation, this can be specified by first indicating the earliest time possible for the arrival on the first day, and then the latest timing acceptable on the next day.

If this results in a figure where the first 4 digits represent a time later than the time in the next 4 digits, it means that the flexibility ranges into the next day.

6.4.5 Message Footer

The Message Footer may be composed of ‘Supplementary Information’ (SI) or ‘General Information’ (GI) lines.

If more than one Supplementary or General Information (SI or GI) lines are required in a message, there is no requirement to begin the extra lines with the slash (/) and the space.

6.5 Message Specifications

There are three basic formats for the SCR/SMA/Waitlist Procedure messages and these are for arrival, departure and transit turnaround flights.

The data validation criteria for the overall message structure are specified below.

Header Information Validation

	Rule 1	Rule 2	Rule 3	Rule 4	Rule 5	Rule 6
	Status Validation	**Format Validation**	**Date-Time Validation**	**Set Value Validation**	**Database Lookup Validation**	**Logical Validation**
Standard Message Identifier	M	aaa	n/a	Value = SAL, SAQ, SCR, SHL, SIR, SMA, WCR, WIR	n/a	
Creator Reference	O	Refer to 6.4.2	n/a	Must begin with “/” or “//”	n/a	
Season	M	ann	S = (Northern) Summer W = Winter Year value= 00 - 99	n/a	n/a	Must be greater than or equal to current IATA SEASON
Day of Message	M	nn	Day value = 01 - 31	n/a	n/a	
Month of Message	M	aaa	Month value = JAN - DEC	n/a	n/a	SAME LINE AS DATE
Level 1, 2 or 3 airport	M	aaa	n/a	n/a	Lookup = Location identifier codes	
Message Reference	C	REYT/x(x{.34})	n/a	Must begin with = “REYT/”	n/a	

Information Data Line Validation

Data Element	Rule 1	Rule 2	Rule 3	Rule 4	Rule 5	Rule 6
	Status Validation	Format Validation	Date-Time Validation	Set Value Validation	Database Lookup Validation	Logical Validation
	*** Data Element Status Validations are Message Dependent					
Action Code	M	a	n/a	Value = A, B, C, D, E, F, H, I, K, L, N, O, P, Q, R, T, U, V, W, X, Y, or Z	n/a	
Arrival Airline Designator	***	xx(a)	n/a	n/a	Lookup = Airline desginator codes	
Arrival Flight Number	***	nnn(n)	n/a	Value = 0000-9999	n/a	
Arrival Operational Suffix	***	a	n/a	Value = A - Z	n/a	
Departure Airline Designator	***	xx(a)	n/a	n/a	Lookup = Airline desginator codes	
Departure Flight Number	***	nnn(n)	n/a	Value = 0000-9999	n/a	
Departure Operational Suffix	***	a	n/a	Value = A - Z	n/a	
From Day	***	nn	Day value = 01 - 31	n/a	n/a	“From Day/Month” field must be less than “To Day/Month” field
From Month	***	aaa	Month value = JAN - DEC	n/a	n/a	“From Day/Month” field must be less than “To Day/Month” field
To Day	***	nn	Day value = 01 - 31	n/a	n/a	“To Day/Month” field must be greater than “From Day/Month” field
To Month	***	aaa	Month value = JAN - DEC	n/a	n/a	“To Day/Month” field must be greater than “From Day/Month” field
Day(s) of Operation	***	nnnnnnn	Value = 0 - 7	n/a	n/a	
Number of Seats	***	nnn	n/a	Value = 000 - 999	n/a	
Aircraft Type	***	xxx	n/a	n/a	Lookup = Aircraft type	
Origin Airport	***	aaa	n/a	n/a	Lookup = Location identifier codes	
Previous Airport	***	aaa	n/a	n/a	Lookup = Location identifier codes	
Scheduled Time of Arrival	***	nnnn	Value = 0001 - 2400	n/a	n/a	
Scheduled Time of Departure	***	nnnn	Value = 0000 - 2359	n/a	n/a	
Overmidnight Indicator	***	n	n/a	Value = Blank, 1 to 9	n/a	
Next Airport	***	aaa	n/a	n/a	Lookup = Location identifier codes	
Destination Airport	***	aaa	n/a	n/a	Lookup = Location identifier codes	
Arrival Service Type	***	a	n/a	n/a	Lookup = Service type	
Departure Service Type	***	a	n/a	n/a	Lookup = Service type	
Frequency Rate	***	n	n/a	Value = Blank or 2	n/a	

Additional Information Data Line Validation

The logical structure (i.e. message specification) for each message is specified below.

When a specification has a different structure for a specific Action Code (e.g. SCR for Action Code E), this is also specified below.

Additional Element - Identification Code	***	aa	n/a	AA, AD	n/a	n/a
Additional Element - Information relevant to the code	***	nnnn	Value = 0001 - 2400	n/a	n/a	n/a
Additional Element - Identification Code	***	aa	n/a	CA, CD	n/a	n/a
Additional Element - Information relevant to the code	***	xx(xx)	n/a	Value = AA, AB, CF, GA, HA, MU, N80, NA, NB, NE, NP, PA, QT, R(nnn), RA, SE, T(nnn), TA or UA	n/a	n/a
Additional Element - Identification Code	***	aa	n/a	FA, FD	n/a	n/a
Additional Element - Information relevant to the code	***	nnnnnnnn	Value = 00010001 - 24002400	n/a	n/a	n/a
Additional Element - Identification Code	***	aa	n/a	LT	n/a	n/a
Additional Element - Information relevant to the code	***	nnnn	No value	n/a	n/a	n/a
Additional Element - Identification Code	***	aa	n/a	RA, RD	n/a	n/a
Additional Element - Information relevant to the code	***	nnnn	Value = 0001 - 2400	n/a	n/a	n/a
Additional Element - Identification Code	***	aa	n/a	TA, TD	n/a	n/a
Additional Element - Information relevant to the code	***	x(x)	n/a	n/a	Lookup = Passenger terminal indicators	n/a
Additional Element - Identification Code	***	aa	n/a	SA, SD	n/a	n/a
Additional Element - Information relevant to the code	***	x(xxxxxxxxx)	n/a	n/a	n/a	n/a

SAL Message Specification

Data Element	Message Sender				Message Application and Data Element Status						Notes
	AL	CO	SF		ARR		DEP		T/T		
Information											
Action Code (s)	n/a	K H O U T	K O U		M		M		M		
Arrival Airline Designator					M		n/a		M		
Arrival Flight Number					M		n/a		M		
Arrival Operational Suffix					C		n/a		C		If included
Separator (Space)					n/a		M		M		
Departure Airline Designator					n/a		M		M		
Departure Flight Number					n/a		M		M		
Departure Operational Suffix					n/a		C		C		
Separator (Space)					M		M		M		
From Day and Month					M		M		M		'From Period of Operation' or 'Single Dated Flights'
To Day and Month					C		C		C		Mandatory for 'Period of Operation'. For other 'single dates', use /…..
Separator (Space)					C		C		C		Mandatory if 'Period of Operation' included
Day(s) of Operation					C		C		C		Mandatory if 'Period of Operation' included
Separator (Space)					M		M		M		
Number of Seats					M		M		M		
Aircraft Type					M		M		M		
Separator (Space)					M		M		M		
Origin Airport					C		n/a		C		Mandatory if not equal to 'Previous Airport'
Previous Airport					M		n/a		M		
Scheduled Time of Arrival					M		n/a		M		
Separator (Space)					n/a		n/a		M		
Scheduled Time of Departure					n/a		M		M		
Overmidnight Indicator					n/a		n/a		C		
Next Airport					n/a		M		M		
Destination Airport					n/a		C		C		Mandatory if not equal to 'Next Airport'
Separator (Space)					M		M		M		
Arrival Service Type					M		n/a		M		
Departure Service Type					n/a		M		M		
Frequency Rate					C		C		C		
End Of Line (<≡)					C		C		C		Mandatory if no Additional Information included or when the number of characters in the Information Data Line exceeds the maximum line length limitation. Also Mandatory if Additional Information Data directly follows and the total number of characters does not exceed the maximum line length limitation.
Additional Information											Refer to Table below for applicable Additional Elements for this message
Separator (Slash)					C		C		C		Mandatory if any Additional Element Group included
Additional Element Group											The following data elements are applicable to each Additional Element Group included
Separator (Space)					M		M		M		
Additional Element - Identification Code					M		M		M		Refer to Table below for applicable code values
Separator (Period)					M		M		M		
Additional Element - Information relevant to the code					M		M		M		

SAL Message Specification *(cont'd)*

Data Element	Message Sender				Message Application and Data Element Status						Notes
	AL	CO	SF		ARR		DEP		T/T		
Additional Element Group(s)											The Group of Additional Elements is repeated for each applicable Identification Code included
Separator (Slash)					C		C		C		Mandatory if any Additional Element Group(s) included
End of Line (<≡)					C		C		C		Mandatory if any Additional Element Group included as a separate line in the message. Also Mandatory if Additional Information directly follows the Information.
Table of Applicable Additional Elements											
Cleared Times (Values = AA, AD)					n/a		n/a		n/a		
Coordinator Reason (Values = CA, CD)		Action Codes **H O U** only			C		C		C		Mandatory if Coordinator Reason(s) provided. Group is repeated if both arrival and departure reasons provided.
Flexibility Range (Values = FA, FD)					n/a		n/a		n/a		
Requested Timings (Values = RA, RD)					C		C		C		Mandatory if Requested Timings information provided. Group is repeated if both arrival and departure Requested Timings provided.
Passenger Terminal Identifier (Values = TA, TD)					C		C		C		Mandatory if airports require coordination by passenger terminal. Group is repeated if both arrival and departure passenger terminal information provided.
Status Information (Values = SA, SD)		Action Codes **K H O T** only			C		C		C		Mandatory if status information provided. Group is repeated if both arrival and departure status information provided.

SAQ Message Specification

Data Element	Message Sender				Message Application and Data Element Status						Notes
	AL	CO	SF		ARR		DEP		T/T		
Information											
Action Code (s)	**C N R**	**H I U**	n/a		M		M		M		Action Codes H and U may be used by Coordinators.
Arrival Airline Designator					M		n/a		M		
Arrival Flight Number					M		n/a		M		
Arrival Operational Suffix					C		n/a		C		If included
Separator (Space)					n/a		M		M		
Departure Airline Designator					n/a		M		M		
Departure Flight Number					n/a		M		M		
Departure Operational Suffix					n/a		C		C		
Separator (Space)					M		M		M		
From Day and Month					M		M		M		'From Period of Operation' or 'Single Dated Flights'
To Day and Month					C		C		C		Mandatory for 'Period of Operation'. For other 'single dates', use /…..
Separator (Space)					C		C		C		Mandatory if 'Period of Operation' included
Day(s) of Operation					C		C		C		Mandatory if 'Period of Operation' included
Separator (Space)					M		M		M		
Number of Seats					M		M		M		
Aircraft Type					M		M		M		
Separator (Space)					M		M		M		
Origin Airport					C		n/a		C		Mandatory if not equal to 'Previous Airport'
Previous Airport					M		n/a		M		
Scheduled Time of Arrival					M		n/a		M		
Separator (Space)					n/a		n/a		M		
Scheduled Time of Departure					n/a		M		M		
Overmidnight Indicator					n/a		n/a		C		
Next Airport					n/a		M		M		
Destination Airport					n/a		C		C		Mandatory if not equal to 'Next Airport'
Separator (Space)					M		M		M		
Arrival Service Type					M		n/a		M		
Departure Service Type					n/a		M		M		
Frequency Rate					C		C		C		
End Of Line (<≡)					C		C		C		Mandatory if no Additional Information included or when the number of characters in the Information Data Line exceeds the maximum line length limitation. Also Mandatory if Additional Information directly follows and the total number of characters does not exceed the maximum line length limitation.
Additional Information											Refer to Table below for applicable Additional Elements for this message
Separator (Slash)					C		C		C		Mandatory if any Additional Element Group included
Separator (Space)					M		M		M		
Additional Element - Identification Code					M		M		M		Refer to Table below for applicable code values
Separator (Period)					M		M		M		
Additional Element - Information relevant to the code					M		M		M		

SAQ Message Specification *(cont'd)*

Data Element	Message Sender				Message Application and Data Element Status						Notes
	AL	CO	SF		ARR		DEP		T/T		
Additional Element Group(s)											The Group of Additional Elements is repeated for each applicable Identification Code included
Separator (Slash)					C		C		C		Mandatory if any Additional Element Group(s) included
End Of Line (<≡)					C		C		C		Mandatory if no Additional Information included or when the number of characters in the Information Data Line exceeds the maximum line length limitation. Also Mandatory if Additional Information directly follows the Information Data Line and the total number of characters does not exceed the maximum line length limitation.
Table of Applicable Additional Elements											
Cleared Times (Values = AA, AD)					n/a		n/a		n/a		
Coordinator Reason (Values = CA, CD)		Action Code I only			C		C		C		Mandatory if Coordinator Reason(s) provided. Group is repeated if both arrival and departure reasons provided.
Flexibility Range (Values = FA, FD)	Action Codes **N** and **R** only				C		C		C		Mandatory if Flexibility Range information provided. Group is repeated if both arrival and departure reasons provided.
Requested Timings (Values = RA, RD)					n/a		n/a		n/a		
Passenger Terminal Identifier (Values = TA, TD)					C		C		C		Mandatory if airports require coordination by passenger terminal. Group is repeated if both arrival and departure passenger terminal information provided.
Status Information (Values = SA, SD)		Action Codes **H** and **I** only			C		C		C		Mandatory if status information provided. Group is repeated if both arrival and departure status information provided.

SCR Message Specification

Data Element	Message Sender				Message Application and Data Element Status						Notes
	AL	CO	SF		ARR		DEP		T/T		
Information											
Action Code (s)	A B C D F I L M N P R V Y Z	H K O P T U W X	n/a		M		M		M		
Arrival Airline Designator					M		n/a		M		
Arrival Flight Number					M		n/a		M		
Arrival Operational Suffix					C		n/a		C		If included
Separator (Space)					n/a		M		M		
Departure Airline Designator					n/a		M		M		
Departure Flight Number					n/a		M		M		
Departure Operational Suffix					n/a		C		C		
Separator (Space)					M		M		M		
From Day and Month					M		M		M		'From Period of Operation' or 'Single Dated Flights'
To Day and Month					C		C		C		Mandatory for 'Period of Operation'. For other 'single dates', use /…..
Separator (Space)					C		C		C		Mandatory if 'Period of Operation' included
Day(s) of Operation					C		C		C		Mandatory if 'Period of Operation' included
Separator (Space)					M		M		M		
Number of Seats					M		M		M		
Aircraft Type					M		M		M		
Separator (Space)					M		M		M		
Origin Airport					C		n/a		C		Mandatory if not equal to 'Previous Airport'
Previous Airport					M		n/a		M		
Scheduled Time of Arrival					M		n/a		M		
Separator (Space)					n/a		n/a		M		
Scheduled Time of Departure					n/a		M		M		
Overmidnight Indicator					n/a		n/a		C		
Next Airport					n/a		M		M		
Destination Airport					n/a		C		C		Mandatory if not equal to 'Next Airport'
Separator (Space)					M		M		M		
Arrival Service Type					M		n/a		M		
Departure Service Type					n/a		M		M		
Frequency Rate					C		C		C		
End Of Line (<≡)					C		C		C		Mandatory if no Additional Information included or when the number of characters in the Information Data Line exceeds the maximum line length limitation. Also Mandatory if Additional Information directly follows and the total number of characters does not exceed the maximum line length limitation.
Additional Information											Refer to Table below for applicable Additional Elements for this message
Separator (Slash)					C		C		C		Mandatory if any Additional Element Group included
Additional Element Group											The following data elements are applicable to each Additional Element Group included
Separator (Space)					M		M		M		
Additional Element - Identification Code					M		M		M		Refer to Table below for applicable code values
Separator (Period)					M		M		M		
Additional Element - Information relevant to the code					M		M		M		

SCR Message Specification *(cont'd)*

Data Element	Message Sender				Message Application and Data Element Status						Notes
	AL	CO	SF		ARR		DEP		T/T		
Additional Element Group(s)											The Group of Additional Elements is repeated for each applicable Identification Code included
Separator (Slash)					C		C		C		Mandatory if any Additional Element Group(s) included
End Of Line (<≡)					C		C		C		Mandatory if no Additional Information included or when the number of characters in the Information Data Line exceeds the maximum line length limitation. Also Mandatory if Additional Information directly follows the Information Data Line and the total number of characters does not exceed the maximum line length limitation.
Table of Applicable Additional Elements											
Cleared Times (Values = AA, AD)					n/a		n/a		n/a		
Coordinator Reason (Values = CA, CD)					C		C		C		Mandatory if Coordinator Reason(s) provided. Group is repeated if both arrival and departure reasons provided.
Flexibility Range (Values = FA, FD)	Action Codes **B,N,R,V, Y** only				C		C		C		
Requested Timings (Values = RA, RD)					C		C		C		Mandatory if Requested Timings information provided. Group is repeated if both arrival and departure Requested Timings provided.
Passenger Terminal Identifier (Values = TA, TD)					C		C		C		Mandatory if airports require coordination by passenger terminal. Group is repeated if both arrival and departure passenger terminal information provided.
Status Information (Values = SA, SD)		Action Codes **K H O T** only			C		C		C		Mandatory if status information provided. Group is repeated if both arrival and departure status information provided.

SCR-E Message Specifications

Data Element	Message Sender				Message Application and Data Element Status						Notes
	AL	CO	SF		ARR		DEP		T/T		
Information											
Action Code (s)	**E**	n/a	n/a		M		M		M		
Arrival Airline Designator					M		n/a		M		
Arrival Flight Number					O		n/a		O		
Arrival Operational Suffix					C		n/a		C		Only included If flight number included
Separator (Space)					n/a		M		M		
Departure Airline Designator					n/a		M		M		
Departure Flight Number					n/a		O		O		
Departure Operational Suffix					n/a		C		C		Only included If flight number included
Separator (Space)					C		C		C		Mandatory if ‘Period of Operation’ or ‘Single Dated Flights’ included
Period of Operation/Single Dated Flights					O		O		O		
- From Day and Month					C		C		C		‘From Period of Operation’ or ‘Single Dated Flights’
- To Day and Month					C		C		C		Mandatory for ‘Period of Operation’. For other ‘single dates’, use /…..
Separator (Space)					n/a		n/a		n/a		
Day(s) of Operation					n/a		n/a		n/a		
Separator (Space)					n/a		n/a		n/a		
Number of Seats					n/a		n/a		n/a		
Aircraft Type					n/a		n/a		n/a		
Separator (Space)					n/a		n/a		n/a		
Origin Airport					n/a		n/a		n/a		
Previous Airport					n/a		n/a		n/a		
Scheduled Time of Arrival					n/a		n/a		n/a		
Separator (Space)					n/a		n/a		n/a		
Scheduled Time of Departure					n/a		n/a		n/a		
Overmidnight Indicator					n/a		n/a		n/a		
Next Airport					n/a		n/a		n/a		
Destination Airport					n/a		n/a		n/a		
Separator (Space)					n/a		n/a		n/a		
Arrival Service Type					n/a		n/a		n/a		
Departure Service Type					n/a		n/a		n/a		
Frequency Rate					n/a		n/a		n/a		
End Of Line (<≡)					M		M		M		
Additional Information											Refer to Table below for applicable Additional Elements for this message
Separator (Slash)											Mandatory if any Additional Element Group included
Additional Element Group											The following data elements are applicable to each Additional Element Group included
Separator (Space)					M		M		M		
Additional Element - Identification Code					M		M		M		Refer to Table below for applicable code values
Separator (Period)					M		M		M		
Additional Element - Information relevant to the code					M		M		M		

SCR-E Message Specifications *(cont'd)*

Data Element	Message Sender				Message Application and Data Element Status						Notes
	AL	CO	SF		ARR		DEP		T/T		
Additional Element Group(s)											The Group of Additional Elements is repeated for each applicable Identification Code included
Separator (Slash)					C		C		C		Mandatory if any Additional Element Group included
End of Line (<≡)					C		C		C		Mandatory if any Additional Element Group included as a separate line in the message. Also Mandatory if Additional Information directly follows the Information Data Line.
Table of Applicable Additional Elements											
Cleared Times (Values = AA, AD)					n/a		n/a		n/a		
Coordinator Reason (Values = CA, CD)					n/a		n/a		n/a		
Flexibility Range (Values = FA, FD)					n/a		n/a		n/a		
Requested Timings (Values = RA, RD)					n/a		n/a		n/a		
Passenger Terminal Identifier (Values = TA, TD)					n/a		n/a		n/a		

SHL Message Specifications

Data Element	Message Sender				Message Application and Data Element Status						Notes
	AL	CO	SF		ARR		DEP		T/T		
Information											
Action Code (s)	n/a	**H U T**	n/a		M		M		M		
Arrival Airline Designator					M		n/a		M		
Arrival Flight Number					M		n/a		M		
Arrival Operational Suffix					C		n/a		C		If included
Separator (Space)					n/a		M		M		
Departure Airline Designator					n/a		M		M		
Departure Flight Number					n/a		M		M		
Departure Operational Suffix					n/a		C		C		
Separator (Space)					M		M		M		
From Day and Month					M		M		M		
To Day and Month					M		M		M		
Separator (Space)					M		M		M		
Day(s) of Operation					M		M		M		
Separator (Space)					M		M		M		
Number of Seats					M		M		M		
Aircraft Type					M		M		M		
Separator (Space)					M		M		M		
Origin Airport					C		n/a		C		Mandatory if not equal to ‘Previous Airport’
Previous Airport					M		n/a		M		
Scheduled Time of Arrival					M		n/a		M		
Separator (Space)					n/a		n/a		M		
Scheduled Time of Departure					n/a		M		M		
Overmidnight Indicator					n/a		n/a		C		
Next Airport					n/a		M		M		
Destination Airport					n/a		C		C		Mandatory if not equal to ‘Next Airport’
Separator (Space)					M		M		M		
Arrival Service Type					M		n/a		M		
Departure Service Type					n/a		M		M		
Frequency Rate					C		C		C		
End Of Line (<≡)					C		C		C		Mandatory if no Additional Information included or when the number of characters in the Information Data Line exceeds the maximum line length limitation. Also Mandatory if Additional Information directly follows and the total number of characters does not exceed the maximum line length limitation.
Additional Information											Refer to Table below for applicable Additional Elements for this message
Separator (Slash)					C		C		C		Mandatory if any Additional Element Group included
Additional Element Group											The following data elements are applicable to each Additional Element Group included
Separator (Space)					M		M		M		
Additional Element - Identification Code					M		M		M		Refer to Table below for applicable code values
Separator (Period)					M		M		M		
Additional Element - Information relevant to the code					M		M		M		

SHL Message Specifications *(cont'd)*

Data Element	Message Sender				Message Application and Data Element Status						Notes
	AL	CO	SF		ARR		DEP		T/T		
Additional Element Group(s)											The Group of Additional Elements is repeated for each applicable Identification Code included
Separator (Slash)					C		C		C		Mandatory if any Additional Element Group(s) included
End Of Line (<≡)					C		C		C		Mandatory if no Additional Information included or when the number of characters in the Information Data Line exceeds the maximum line length limitation. Also Mandatory if Additional Information directly follows the Information Data Line and the total number of characters does not exceed the maximum line length limitation.
Table of Applicable Additional Elements											
Cleared Times (Values = AA, AD)					n/a		n/a		n/a		
Coordinator Reason (Values = CA, CD)		Action Code **U** only			C		C		C		Mandatory if Coordinator Reason(s) provided. Group is repeated if both arrival and departure reasons provided.
Flexibility Range (Values = FA, FD)					n/a		n/a		n/a		
Passenger Terminal Identifier (Values = TA, TD)					n/a		n/a		n/a		
Status Information (Values = SA, SD)		Action Codes **H, T** only			C		C		C		Mandatory if status information provided. Group is repeated if both arrival and departure status information provided.

SIR Message Specifications

Data Element	Message Sender				Message Application and Data Element Status						Notes
	AL	CO	SF		ARR		DEP		T/T		
Information											
Action Code (s)	n/a	**H O P T U**	**H**		M		M		M		
Arrival Airline Designator					M		n/a		M		
Arrival Flight Number					M		n/a		M		
Arrival Operational Suffix					C		n/a		C		If included
Separator (Space)					n/a		M		M		
Departure Airline Designator					n/a		M		M		
Departure Flight Number					n/a		M		M		
Departure Operational Suffix					n/a		C		C		
Separator (Space)					M		M		M		
From Day and Month					M		M		M		'From Period of Operation' and 'Single Dated Flights'
To Day and Month					C		C		C		Mandatory for 'Period of Operation'. For other 'single dates', use /…..
Separator (Space)					C		C		C		Mandatory if 'Period of Operation' included
Day(s) of Operation					C		C		C		Mandatory if 'Period of Operation' included
Separator (Space)					M		M		M		
Number of Seats					M		M		M		
Aircraft Type					M		M		M		
Separator (Space)					M		M		M		
Origin Airport					C		n/a		C		Mandatory if not equal to 'Previous Airport'
Previous Airport					M		n/a		M		
Scheduled Time of Arrival					M		n/a		M		
Separator (Space)					n/a		n/a		M		
Scheduled Time of Departure					n/a		M		M		
Overmidnight Indicator					n/a		n/a		C		
Next Airport					n/a		M		M		
Destination Airport					n/a		C		C		Mandatory if not equal to 'Next Airport'
Separator (Space)					M		M		M		
Arrival Service Type					M		n/a		M		
Departure Service Type					n/a		M		M		
Frequency Rate					C		C		C		
End Of Line (<≡)					C		C		C		Mandatory if no Additional Information included or when the number of characters in the Information Data Line exceeds the maximum line length limitation. Also Mandatory if Additional Information directly follows and the total number of characters does not exceed the maximum line length limitation.
Additional Information											Refer to Table below for applicable Additional Elements for this message
Separator (Slash)					C		C		C		Mandatory if any Additional Element Group included
Additional Element Group											The following data elements are applicable to each Additional Element Group included
Separator (Space)					M		M		M		
Additional Element - Identification Code					M		M		M		Refer to Table below for applicable code values
Separator (Period)					M		M		M		
Additional Element - Information relevant to the code					M		M		M		

SIR Message Specifications *(cont'd)*

Data Element	Message Sender				Message Application and Data Element Status						Notes
	AL	CO	SF		ARR		DEP		T/T		
Additional Element Group(s)											The Group of Additional Elements is repeated for each applicable Identification Code included
Separator (Slash)					C		C		C		Mandatory if any Additional Element Group(s) included
End Of Line (<≡)					C		C		C		Mandatory if no Additional Information included or when the number of characters in the Information Data Line exceeds the maximum line length limitation. Also Mandatory if Additional Information directly follows the Information Data Line and the total number of characters does not exceed the maximum line length limitation.
Table of Applicable Additional Elements											
Cleared Times (Values = AA, AD)					n/a		n/a		n/a		
Coordinator Reason (Values = CA, CD)					n/a		n/a		n/a		
Flexibility Range (Values = FA, FD)					n/a		n/a		n/a		
Requested Timings (Values = RA, RD)					C		C		C		Mandatory if Requested Timings information provided. Group is repeated if both arrival and departure Requested Timings provided.
Passenger Terminal Identifier (Values = TA, TD)					C		C		C		Mandatory if airports require coordination by passenger terminal. Group is repeated if both arrival and departure passenger terminal information provided.
Status Information (Values = SA, SD)		Action Codes **H O T** only			C		C		C		Mandatory if status information provided. Group is repeated if both arrival and departure status information provided.

SIR-Q Message Specifications - Request by Airline

Data Element	Message Sender				Message Application and Data Element Status						Notes
	AL	CO	SF		ARR		DEP		T/T		
Information											
Action Code (s)	**Q**	n/a	n/a		M		M		M		
Arrival Airline Designator					M		n/a		M		May be 'QQQ'
Arrival Flight Number					O		n/a		O		
Arrival Operational Suffix					C		n/a		C		Only included If flight number included
Separator (Space)					n/a		M		M		
Departure Airline Designator					n/a		M		M		May be 'QQQ'
Departure Flight Number					n/a		O		O		
Departure Operational Suffix					n/a		C		C		Only included If flight number included
Separator (Space)					C		C		C		Mandatory if 'Period of Operation' or 'Single Dated Flights' included
Period of Operation/Single Dated Flights					O		O		O		
- From Day and Month					C		C		C		'From Period of Operation' or 'Single Dated Flights'
- To Day and Month					C		C		C		Mandatory for 'Period of Operation'. For other 'single dates', use /…..
Separator (Space)					C		C		C		Mandatory if 'Period of Operation' included
Day(s) of Operation					C		C		C		Mandatory if 'Period of Operation' included
Separator (Space)					C		C		C		Mandatory if any of the following elements included
Number of Seats					n/a		n/a		n/a		
Aircraft Type					n/a		n/a		n/a		
Separator (Space)					n/a		n/a		n/a		
Origin Airport					n/a		n/a		n/a		
Previous Airport					n/a		n/a		n/a		
Scheduled Time of Arrival					O		n/a		O		
Separator (Space)					n/a		n/a		C		Mandatory if Scheduled Time of Arrrival included for T/T and any of the following elements included
Scheduled Time of Departure					n/a		n/a		O		
Overmidnight Indicator					n/a		n/a		O		
Next Airport					n/a		n/a		n/a		
Destination Airport					n/a		n/a		n/a		
Separator (Space)					n/a		n/a		n/a		
Arrival Service Type					n/a		n/a		n/a		
Departure Service Type					n/a		n/a		n/a		
Frequency Rate					n/a		n/a		n/a		
End Of Line (<≡)					M		M		M		
Additional Information											Refer to Table below for applicable Additional Elements for this message
Separator (Slash)					C		C		C		Mandatory if any Additional Element Group included
Additional Element Group											The following data elements are applicable to each Additional Element Group included
Separator (Space)					M		M		M		
Additional Element - Identification Code					M		M		M		Refer to Table below for applicable code values
Separator (Period)					M		M		M		
Additional Element - Information relevant to the code					M		M		M		

SIR-Q Message Specifications - Request by Airline *(cont'd)*

Data Element	Message Sender				Message Application and Data Element Status						Notes
	AL	CO	SF		ARR		DEP		T/T		
Additional Element Group(s)											The Group of Additional Elements is repeated for each applicable Identification Code included
Separator (Slash)					C		C		C		Mandatory if any Additional Element Group included.
End of Line (<≡)					C		C		C		Mandatory if any Additional Element Group included as a separate line in the message. Also Mandatory if Additional Information directly follows the Information Data Line.
Table of Applicable Additional Elements											
Cleared Times (Values = AA, AD)					n/a		n/a		n/a		
Coordinator Reason (Values = CA, CD)					n/a		n/a		n/a		
Flexibility Range (Values = FA, FD)					n/a		n/a		n/a		
Requested Timings (Values = RA, RD)					n/a		n/a		n/a		
Passenger Terminal Identifier (Values = TA, TD)					n/a		n/a		n/a		

SMA Message Specifications

Data Element	Message Sender				Message Application and Data Element Status						Notes
	AL	CO	SF		ARR		DEP		T/T		
Information											
Action Code (s)	A C D N P R Z	n/a	H K O U W X T		M		M		M		
Arrival Airline Designator					M		n/a		M		
Arrival Flight Number					M		n/a		M		
Arrival Operational Suffix					C		n/a		C		If included
Separator (Space)					n/a		M		M		
Departure Airline Designator					n/a		M		M		
Departure Flight Number					n/a		M		M		
Departure Operational Suffix					n/a		C		C		
Separator (Space)					M		M		M		
From Day and Month					M		M		M		'From Period of Operation' or 'Single Dated Flights'
To Day and Month					C		C		C		Mandatory for 'Period of Operation'. For other 'single dates', use /…..
Separator (Space)					C		C		C		Mandatory if 'Period of Operation' included
Day(s) of Operation					C		C		C		Mandatory if 'Period of Operation' included
Separator (Space)					M		M		M		
Number of Seats					M		M		M		
Aircraft Type					M		M		M		
Separator (Space)					M		M		M		
Origin Airport					C		n/a		C		Mandatory if not equal to 'Previous Airport'
Previous Airport					M		n/a		M		
Scheduled Time of Arrival					M		n/a		M		
Separator (Space)					n/a		n/a		M		
Scheduled Time of Departure					n/a		M		M		
Overmidnight Indicator					n/a		n/a		C		
Next Airport					n/a		M		M		
Destination Airport					n/a		C		C		Mandatory if not equal to 'Next Airport'
Separator (Space)					M		M		M		
Arrival Service Type					M		n/a		M		
Departure Service Type					n/a		M		M		
Frequency Rate					C		C		C		
End Of Line (<≡)					C		C		C		Mandatory if no Additional Information included or when the number of characters in the Information Data Line exceeds the maximum line length limitation. Also Mandatory if Additional Information directly follows and the total number of characters does not exceed the maximum line length limitation.
Additional Information											Refer to Table below for applicable Additional Elements for this message
Separator (Slash)					C		C		C		Mandatory if any Additional Element Group included
Additional Element Group											The following data elements are applicable to each Additional Element Group included
Separator (Space)					M		M		M		
Additional Element - Identification Code					M		M		M		Refer to Table below for applicable code values
Separator (Period)					M		M		M		
Additional Element - Information relevant to the code					M		M		M		

SMA Message Specifications *(cont'd)*

Data Element	Message Sender				Message Application and Data Element Status						Notes
	AL	CO	SF		ARR		DEP		T/T		
Additional Element Group(s)											The Group of Additional Elements is repeated for each applicable Identification Code included
Separator (Slash)					C		C		C		Mandatory if any Additional Element Group(s) included
End Of Line (<≡)					C		C		C		Mandatory if no Additional Information included or when the number of characters in the Information Data Line exceeds the maximum line length limitation. Also Mandatory if Additional Information directly follows the Information Data Line and the total number of characters does not exceed the maximum line length limitation.
Table of Applicable Additional Elements											
Cleared Times (Values = AA, AD)					n/a		n/a		n/a		
Coordinator Reason (Values = CA, CD)		Action Code **U** only			C		C		C		Mandatory if Coordinator Reason(s) provided. Group is repeated if both arrival and departure reasons provided.
Flexibility Range (Values = FA, FD)					n/a		n/a		n/a		
Requested Timings (Values = RA, RD)					C		C		C		Mandatory if Requested Timings information provided. Group is repeated if both arrival and departure Requested Timings provided.
Passenger Terminal Identifier (Values = TA, TD)					C		C		C		Mandatory if airports require coordination by passenger terminal. Group is repeated if both arrival and departure passenger terminal information provided.
Status Information (Values = SA, SD)		Action Codes **K H O T** only			C		C		C		Mandatory if status information provided. Group is repeated if both arrival and departure status information provided.

SMA-E Message Specifications

Data Element	Message Sender				Message Application and Data Element Status						Notes
	AL	CO	SF		ARR		DEP		T/T		
Information											
Action Code (s)	**E**	n/a	n/a		M		M		M		
Arrival Airline Designator					M		n/a		M		
Arrival Flight Number					O		n/a		O		
Arrival Operational Suffix					C		n/a		C		Only included If flight number included
Separator (Space)					n/a		M		M		
Departure Airline Designator					n/a		M		M		
Departure Flight Number					n/a		O		O		
Departure Operational Suffix					n/a		C		C		Only included If flight number included
Separator (Space)					C		C		C		Mandatory if ‘Period of Operation’ or ‘Single Dated Flights’ included
Period of Operation/Single Dated Flights					O		O		O		
- From Day and Month					C		C		C		Mandatory for ‘Period of Operation’ or ‘Single Dated Flights’
- To Day and Month					C		C		C		Mandatory for ‘Period of Operation’. For other ‘single dates’, use /…..
Separator (Space)					n/a		n/a		n/a		
Day(s) of Operation					n/a		n/a		n/a		
Separator (Space)					n/a		n/a		n/a		
Number of Seats					n/a		n/a		n/a		
Aircraft Type					n/a		n/a		n/a		
Separator (Space)					n/a		n/a		n/a		
Origin Airport					n/a		n/a		n/a		
Previous Airport					n/a		n/a		n/a		
Scheduled Time of Arrival					n/a		n/a		n/a		
Separator (Space)					n/a		n/a		n/a		
Scheduled Time of Departure					n/a		n/a		n/a		
Overmidnight Indicator					n/a		n/a		n/a		
Next Airport					n/a		n/a		n/a		
Destination Airport					n/a		n/a		n/a		
Separator (Space)					n/a		n/a		n/a		
Departure Service Type					n/a		n/a		n/a		
Frequency Rate					n/a		n/a		n/a		
End Of Line (<≡)					M		M		M		
Additional Information											Refer to Table below for applicable Additional Elements for this message
Separator (Slash)					C		C		C		Mandatory if any Additional Element Group included
Additional Element Group											The following data elements are applicable to each Additional Element Group included
Separator (Space)					M		M		M		
Additional Element - Identification Code					M		M		M		Refer to Table below for applicable code values
Separator (Period)					M		M		M		
Additional Element - Information relevant to the code					M		M		M		

SMA-E Message Specifications *(cont'd)*

Data Element	Message Sender				Message Application and Data Element Status						Notes
	AL	CO	SF		ARR		DEP		T/T		
Additional Element Group(s)											The Group of Additional Elements is repeated for each applicable Identification Code included
Separator (Slash)					C		C		C		Mandatory if any Additional Element Group included.
End of Line (<≡)					C		C		C		Mandatory if any Additional Element Group included as a separate line in the message. Also Mandatory if Additional Information directly follows the Information Data Line.
Table of Applicable Additional Elements											
Cleared Times (Values = AA, AD)					n/a		n/a		n/a		
Coordinator Reason (Values = CA, CD)					n/a		n/a		n/a		
Flexibility Range (Values = FA, FD)					n/a		n/a		n/a		
Requested Timings (Values = RA, RD)					n/a		n/a		n/a		
Passenger Terminal Identifier (Values = TA, TD)					n/a		n/a		n/a		

WCR Message Specifications

Data Element	Message Sender				Message Application and Data Element Status						Notes
	AL	CO	SF		ARR		DEP		T/T		
Information											
Action Code (s)	C R M N Z	P W X	n/a		M		M		M		
Arrival Airline Designator					M		n/a		M		
Arrival Flight Number					M		n/a		M		
Arrival Operational Suffix					C		n/a		C		If included
Separator (Space)					n/a		M		M		
Departure Airline Designator					n/a		M		M		
Departure Flight Number					n/a		M		M		
Departure Operational Suffix					n/a		C		C		
Separator (Space)					M		M		M		
From Day and Month					M		M		M		'From Period of Operation' and 'Single Dated Flights'
To Day and Month					C		C		C		Mandatory for 'Period of Operation'. For other 'single dates', use /…..
Separator (Space)					C		C		C		Mandatory if 'Period of Operation' included
Day(s) of Operation					C		C		C		Mandatory if 'Period of Operation' included
Separator (Space)					M		M		M		
Number of Seats					M		M		M		
Aircraft Type					M		M		M		
Separator (Space)					M		M		M		
Origin Airport					C		n/a		C		Mandatory if not equal to 'Previous Airport'
Previous Airport					M		n/a		M		
Scheduled Time of Arrival					M		n/a		M		
Separator (Space)					n/a		n/a		M		
Scheduled Time of Departure					n/a		M		M		
Overmidnight Indicator					n/a		n/a		C		
Next Airport					n/a		M		M		
Destination Airport					n/a		C		C		Mandatory if not equal to 'Next Airport'
Separator (Space)					M		M		M		
Arrival Service Type					M		n/a		M		
Departure Service Type					n/a		M		M		
Frequency Rate					C		C		C		
End Of Line (<≡)					C		C		C		Mandatory if no Additional Information included or when the number of characters in the Information Data Line exceeds the maximum line length limitation. Also Mandatory if Additional Information directly follows and the total number of characters does not exceed the maximum line length limitation.
Additional Information											Refer to Table below for applicable Additional Elements for this message
Separator (Slash)					C		C		C		Mandatory if any Additional Element Group included
Additional Element Group											The following data elements are applicable to each Additional Element Group included
Separator (Space)					M		M		M		
Additional Element - Identification Code					M		M		M		Refer to Table below for applicable code values
Separator (Period)					M		M		M		
Additional Element - Information relevant to the code					M		M		M		

WCR Message Specifications *(cont'd)*

Data Element	Message Sender				Message Application and Data Element Status						Notes
	AL	CO	SF		ARR		DEP		T/T		
Additional Element Group(s)											The Group of Additional Elements is repeated for each applicable Identification Code included
Separator (Slash)					C		C		C		Mandatory if any Additional Element Group(s) included
End Of Line (<≡)					C		C		C		Mandatory if no Additional Information included or when the number of characters in the Information Data Line exceeds the maximum line length limitation. Also Mandatory if Additional Information directly follows the Information Data Line and the total number of characters does not exceed the maximum line length limitation.
Table of Applicable Additional Elements											
Cleared Times (Values = AA, AD)					C		C		C		Mandatory if Cleared Times provided. Group is repeated if both arrival and departure times provided.
Coordinator Reason (Values = CA, CD)					n/a		n/a		n/a		
Flexibility Range (Values = FA, FD)					n/a		n/a		n/a		
Requested Timings (Values = RA, RD)					n/a		n/a		n/a		
Passenger Terminal Identifier (Values = TA, TD)					n/a		n/a		n/a		

WIR Message Specifications

Data Element	Message Sender				Message Application and Data Element Status						Notes
	AL	CO	SF		ARR		DEP		T/T		
Information											
Action Code (s)	n/a	**P**	n/a		M		M		M		
Arrival Airline Designator					M		n/a		M		
Arrival Flight Number					M		n/a		M		
Arrival Operational Suffix					C		n/a		C		If included
Separator (Space)					n/a		M		M		
Departure Airline Designator					n/a		M		M		
Departure Flight Number					n/a		M		M		
Departure Operational Suffix					n/a		C		C		
Separator (Space)					M		M		M		
From Day and Month					M		M		M		'From Period of Operation' and 'Single Dated Flights'
To Day and Month					C		C		C		Mandatory for 'Period of Operation'. For other 'single dates', use /…..
Separator (Space)					C		C		C		Mandatory if 'Period of Operation' included
Day(s) of Operation					C		C		C		Mandatory if 'Period of Operation' included
Separator (Space)					M		M		M		
Number of Seats					M		M		M		
Aircraft Type					M		M		M		
Separator (Space)					M		M		M		
Origin Airport					C		n/a		C		Mandatory if not equal to 'Previous Airport'
Previous Airport					M		n/a		M		
Scheduled Time of Arrival					M		n/a		M		
Separator (Space)					n/a		n/a		M		
Scheduled Time of Departure					n/a		M		M		
Overmidnight Indicator					n/a		n/a		C		
Next Airport					n/a		M		M		
Destination Airport					n/a		C		C		Mandatory if not equal to 'Next Airport'
Separator (Space)					M		M		M		
Arrival Service Type					M		n/a		M		
Departure Service Type					n/a		M		M		
Frequency Rate					C		C		C		
End Of Line (<≡)					C		C		C		Mandatory if no Additional Information included or when the number of characters in the Information Data Line exceeds the maximum line length limitation. Also Mandatory if Additional Information directly follows and the total number of characters does not exceed the maximum line length limitation.
Additional Information											Refer to Table below for applicable Additional Elements for this message
Separator (Slash)					C		C		C		Mandatory if any Additional Element Group included
Additional Element Group											The following data elements are applicable to each Additional Element Group included
Separator (Space)					M		M		M		
Additional Element - Identification Code					M		M		M		Refer to Table below for applicable code values
Separator (Period)					M		M		M		
Additional Element - Information relevant to the code					M		M		M		

WIR Message Specifications *(cont'd)*

Data Element	Message Sender				Message Application and Data Element Status						Notes
	AL	CO	SF		ARR		DEP		T/T		
Additional Element Group(s)											The Group of Additional Elements is repeated for each applicable Identification Code included
Separator (Slash)					C		C		C		Mandatory if any Additional Element Group(s) included
End Of Line (<≡)					C		C		C		Mandatory if no Additional Information included or when the number of characters in the Information Data Line exceeds the maximum line length limitation. Also Mandatory if Additional Information directly follows the Information Data Line and the total number of characters does not exceed the maximum line length limitation.
Table of Applicable Additional Elements											
Cleared Times (Values = AA, AD)					C		C		C		Mandatory if Cleared Times information provided. Group is repeated if both arrival and departure times provided.
Coordinator Reason (Values = CA, CD)					n/a		n/a		n/a		
Flexibility Range (Values = FA, FD)					n/a		n/a		n/a		
Requested Timings (Values = RA, RD)					n/a		n/a		n/a		
Passenger Terminal Identifier (Values = TA, TD)					n/a		n/a		n/a		

△

WIR-Q Message Specifications

Data Element	Message Sender				Message Application and Data Element Status						Notes
	AL	CO	SF		ARR		DEP		T/T		
Information											
Action Code (s)	**Q**	n/a	n/a		M		M		M		
Arrival Airline Designator					M		n/a		M		May be 'QQQ'
Arrival Flight Number					O		n/a		O		
Arrival Operational Suffix					C		n/a		C		Only included If flight number included
Separator (Space)					n/a		M		M		
Departure Airline Designator					n/a		M		M		May be 'QQQ'
Departure Flight Number					n/a		O		O		
Departure Operational Suffix					n/a		C		C		Only included If flight number included
Separator (Space)					C		C		C		Mandatory if 'Period of Operation' or 'Single Dated Flights' included
Period of Operation/Single Dated Flights					O		O		O		
- From Day and Month					C		C		C		Mandatory for 'Period of Operation' and 'Single Dated Flights'
- To Day and Month					C		C		C		Mandatory for 'Period of Operation'. For other 'single dates', use /…..
Separator (Space)					n/a		n/a		n/a		
Day(s) of Operation					n/a		n/a		n/a		
Separator (Space)					n/a		n/a		n/a		
Number of Seats					n/a		n/a		n/a		
Aircraft Type					n/a		n/a		n/a		
Separator (Space)					n/a		n/a		n/a		
Origin Airport					n/a		n/a		n/a		
Previous Airport					n/a		n/a		n/a		
Scheduled Time of Arrival					n/a		n/a		n/a		
Separator (Space)					n/a		n/a		n/a		
Scheduled Time of Departure					n/a		n/a		n/a		
Overmidnight Indicator					n/a		n/a		n/a		
Next Airport					n/a		n/a		n/a		
Destination Airport					n/a		n/a		n/a		
Separator (Space)					n/a		n/a		n/a		
Arrival Service Type					n/a		n/a		n/a		
Departure Service Type					n/a		n/a		n/a		
Frequency Rate					n/a		n/a		n/a		
End Of Line (<≡)					M		M		M		
Additional Information											Refer to Table below for applicable Additional Elements for this message
Separator (Slash)					C		C		C		Mandatory if any Additional Element Group included
Additional Element Group											The following data elements are applicable to each Additional Element Group included
Separator (Space)					M		M		M		
Additional Element - Identification Code					M		M		M		Refer to Table below for applicable code values
Separator (Period)					M		M		M		
Additional Element - Information relevant to the code					M		M		M		

WIR-Q Message Specifications *(cont'd)*

Data Element	Message Sender				Message Application and Data Element Status						Notes
	AL	CO	SF		ARR		DEP		T/T		
Additional Element Group(s)											The Group of Additional Elements is repeated for each applicable Identification Code included
Separator (Slash)					C		C		C		Mandatory if any Additional Element Group included.
End of Line (<≡)					C		C		C		Mandatory if any Additional Element Group included as a separate line in the message. Also Mandatory if Additional Information directly follows the Information Data Line.
Table of Applicable Additional Elements											
Cleared Times (Values = AA, AD)					n/a		n/a		n/a		
Coordinator Reason (Values = CA, CD)					n/a		n/a		n/a		
Flexibility Range (Values = FA, FD)					n/a		n/a		n/a		
Requested Timings (Values = RA, RD)					n/a		n/a		n/a		
Passenger Terminal Identifier (Values = TA, TD)					n/a		n/a		n/a		

6.6 Action Codes

6.6.1 Introduction

Action Codes are required to define a specific function undertaken by a specified user (i.e. airline, coordinator or facilitator) in the SCR/SMA procedure messages.

Action Codes are specific to the designated user and to the message function.

The Action Codes that may be used in each message together with the designated user are detailed in the tables below.

The messages and Action Codes within the message are listed in alphabetic order.

The Action Code is used to indicate the precise function of the message and the following Sections describe the general use of each Action Code by the message use and the message user.

6.6.2 Message and Action Code Listing

SAL Message

Airline	Coordinator	Facilitator
	H Return to historic **K** Confirmation **O** Offer **T** Allocated subject to conditions **U** No slot allocated	**K** Confirmation **O** Offer—voluntary adjustment request **U** Not confirmed

SAQ Message

Airline	Coordinator
C Data to be changed **N** New request **R** Revised data	**H** Holding **I** Availability information **U** Refusal

SCR Message

Airline	Coordinator
A Acceptance of an offer—no further improvement desired	**H** Holding
B New entrant	**K** Confirmation
C Data to be changed for an operational reason or towards the initial requested time of the airline	**O** Offer
D Delete data	**P** Pending (action or advice)
E Eliminate data	**T** Allocated subject to conditions
F Historics	**U** Refusal
I Revised data (Continuation from previous adjacent Season)	**W** Unable to reconcile flight information
L Revised data (No offer acceptable)	**X** Cancellation
M Data or Waitlist to be changed for reason other than under Action Code **C**	
N New request	
P Acceptance of an offer—maintain on the Waitlist	
R Revised data (Offer acceptable)	
V New entrant with year round status	
Y New request (Continuation from previous adjacent Season)	
Z Decline offer	

SHL Message

Airline	Coordinator
	H Eligible for historic precedence
	U Not eligible for historic precedence
	T Allocated subject to conditions

SIR Message

Airline	Coordinator	Facilitator
Q Request for information	**H** Holding **O** Offer **P** Pending **T** Allocated subject to conditions **U** No Slot Allocated	**H** Holding

SMA Message

Airline	Facilitator
A Acceptance of an offer—no further improvement desired	**H** Holding
C Data to be changed	**K** Confirmation
D Delete data	**O** Offer—voluntary adjustment
E Eliminate data	**T** Allocated subject to conditions
N New request	**U** Not confirmed
P Acceptance of an offer—improvement desired	**W** Unable to reconcile flight information
R Revised data	**X** Cancellation
Z Decline offer	

WCR Message

Airline	Coordinator
C Waitlist to be changed for an operational reason	**P** Pending (for improvement)
M Waitlist to be changed for reason other than under Action Code C	**W** Unable to reconcile flight information
N New Waitlist Request	**X** Removed/Deleted from Waitlist
R Revised Waitlist Request	
Z Removes slotted and non-slotted flights from the coordinators or facilitators database	

WIR Message

Airline	Coordinator
Q Request for information	**P** Pending (for improvement)

6.6.3 Codes used by Airlines

A **Acceptance of an offer—no further improvement desired** **SCR SMA**

Action Code **A** is used to accept an offer of a (slot) clearance (SCR procedure) or to accept a proposal for a voluntary adjustment (SMA procedure).

It further indicates that the airline will not be requesting any improvements in the timings submitted in the original request.

When several offers are proposed for the same request, the acceptance of one of the offers by the airline automatically cancels other offers for the same request.

Example

```
AAF802 AF810 26OCT27MAR 1234567 290AB3 NCE0940 1050LHR JJ
```

B **New entrant** **SCR**

Action Code **B** is used by an airline to request an entirely new slot allocation (SCR procedure).

Example

```
BAF802 AF810 26OCT27MAR 1234567 290AB3 NCE0910 1030LHR JJ
```

C Data to be changed for an operational reason or towards the initial requested time of the airline **SCR**

or

C Data to be changed **SAQ SMA**

or

C Waitlist to be changed for an operational reason **WCR**

Action Code **C** may be used at any time during the entire SCR/SMA process.

It is used by an airline to indicate its intention to change either existing clearances (including historics) for an operational reason or towards the initial requested time of the airline.

It may also be used to change a Waitlist request.

Action Code **C** can only be used in conjunction with one or more appropriate **R, L** or **I** data lines and these lines are used to indicate the changes being requested.

Example

```
CAF802 AF810 26OCT27MAR 1234567 290AB3 NCENCE0910 1030LHRLHR JJ
```

D **Delete data** **SCR SMA**

Action Code **D** is used to delete an existing allocated slot (SCR) or planned operation (SMA).

Example

```
DAF802 AF810 26OCT27MAR 1234567 290AB3 NCE0910 1030LHR JJ
```

E **Eliminate data** **SCR SMA**

Action Code **E** is used to permanently delete (eliminate):

- all allocated slots (SCR) or planned operations (SMA) for specified flight designators;

or,

- all allocated slots (SCR) or planned operations (SMA) for one airline designator.

This may either be for a complete Season or for a period or single dates within a Season.

Caution is recommended when using Action Code **E** to avoid permanently deleting all allocated slots (SCR) or planned operations (SMA).

Examples

Specific AF flights for a period

```
EAF802 AF810 29MAR01MAY
```

All AF arrival and departure flights for a period

```
EAF AF 29MAR01MAY
```

F Historics **SCR**

Action Code **F** may be used when the slot allocation request applies to a historic from the previous **equivalent** Season.

Example

```
FAF802 AF810 26OCT27MAR 1234567 290AB3 NCE0910 1030LHR JJ
```

I Revised data **SCR**
(continuation from previous adjacent Season)

Action Code **I** may be used to request revisions to existing clearances as a continuation of a service that has either started or is planned to start in the previous **adjacent** Season.

The service being requested must be a continuation from the previous adjacent Season (summer followed by winter or winter followed by summer) in UTC or Local Time at the Level 3 airport, or in UTC or Local Time at the origin/destination airport.

Action Code **I** is only used in conjunction with one or several appropriate **C** or **M** data lines to indicate that the airline wishes to align with existing operations in the previous **adjacent** Season to provide a consistent year round operation.

All provisions for Action Code **R** are applicable.

Airlines may request certain amendments to clearances within the previous adjacent Season using Action Code **I**.

The following amendments are acceptable since they are **not** considered relevant to airport capacity constraints;

- Flight Number change only (arrival and/or departure);
- Reduction in aircraft capacity (Number of Seats);
- Contraction of the frequencies or termination of the operation within the new Season.

Note: *Since the flight number may be used to identify slot allocations (clearances) in some coordinator systems, system problems may be encountered when a flight number is changed.*

Example

```
IAF802 AF810 26OCT27MAR 1234567 290AB3 NCE0900 1020LHR JJ
```

L Revised data (No offer acceptable) **SCR**

Action Code **L** is only used in conjunction with one or several associated **C** or **M** data lines to request allocation of a *revised* slot.

The combination of **C** or **M** data lines with **L** data lines must constitute one complete transaction and all **C** or **M** data lines within a transaction must be stated first.

Action Code **L** is used when the requesting airline intends to change the clearances on hold as stated in the associated **C** or **M** data line.

The change is subject to the proviso that the new clearance can be allocated as requested.

For flight number changes, it is recommended that the Action Code **C/L combination** procedure is used rather than the Delete and New **(D/N)** procedure.

It is quite possible that a system receiving a **D/N** request might action the **D**elete line, re-allocate the slot and then not be able to action the **N**ew line.

Example

```
LAF802 AF810 26OCT27MAR 1234567 290AB3 NCE0900 1020LHR JJ
```

M Data to be changed for reason other than Action Code C **SCR**

or

M Waitlist to be changed for any reason other than under Action Code C **WCR**

Action Code **M** may be used at any time during the entire SCR process.

It is used by an airline to indicate its intention to change either existing clearances (including historics) or Waitlist requests.

Action Code **M** can only be used in conjunction with one or more appropriate **R, L** or **I** data lines that are used to indicate the changes being requested.

Example

```
MAF802 AF810 26OCT27MAR 1234567 290AB3 NCENCE0910 1030LHRLHR JJ
```

N **New Data or New Waitlist Request** **SAQ SCR SMA WCR**

Action Code **N** may be used at any time during the entire SCR/SMA process.

Action Code **N** is used to:

- request the availability of slots for a new service (SAQ procedure);
- request a totally new slot allocation (SCR procedure);
- submit a new planned operation (SMA procedure).

Action Code **N** cannot be used to file existing clearances holding historic precedence.

Action Code **F** must be used when maintaining status quo for existing historics.

Action Code **C/I, C/L, C/R, M/I, M/L** or **M/R** combinations must be used to request changes to historics.

For new Waitlist requests, Action Code **N** may be used during or after the SC to request that an existing clearance be recorded in the coordinator or facilitators database for possible improvement to a new requested time not previously advised to the coordinator or facilitator (WCR procedure).

Example

```
NAF802 AF810 26OCT27MAR 1234567 290AB3 NCE0900 1020LHR JJ
```

P **Acceptance of an offer—Maintain Waitlist** **SCR SMA**

Action Code **P** is used to accept an offer of a slot clearance (SCR procedure) or to accept a proposal for a voluntary adjustment request (SMA procedure).

It further indicates that the airline will be seeking improvements to the times in the original request and that the requested times should be held in the coordinators or facilitators database for improvement.

When several offers are proposed for the same request, the acceptance of one of the offers by the airline automatically cancels other offers for the same request.

Example

```
PAF802 AF810 26OCT27MAR 1234567 290AB3 NCE0940 1050LHR JJ
```

Q Request for information **SIR WIR**

Action Code **Q** is used by an airline to request:

- the current status of its slots or planned operations (SIR procedure);
- the status of its Waitlist (WIR procedure);
- the status of slots or planned operations held by other airlines (SIR procedure);
- the status of Waitlist requests for other airlines (WIR procedure).

Examples

QBA BA	BA requests status information for all BA flights (SIR)
Q AF 15AUG31AUG	Request for information for all AF departure flights from 15 August until 31 August (SIR)
QQQQ 15AUG31AUG	Request for information for all arrival flights for all airlines (QQQ) from 15 August until 31 August (SIR)
QBA BA	BA requests Waitlist information for all BA flights (WIR)
QAF 15AUG31AUG	Request for Waitlist information for all AF arrival flights from 15 August until 31 August (WIR)

R Revised Data (Offer acceptable) or Revised Waitlist Request **SAQ SCR SMA WCR**

Action Code **R** may be used at any time during the entire SCR/SMA process.

It is used in conjunction with one or more associated **C** or **M** data lines to:

- indicate the revised data in a request for slot availability information (SAQ procedure);
- request allocation of a revised slot (SCR procedure);
- indicate the revised planned operation (SMA procedure);
- request a change in Waitlist requirements (WCR procedure).

The combination of **C** or **M** data lines with **R** data lines must constitute one complete transaction and all **C** or **M** data lines within a transaction must be stated first.

Action Code **R** is used when the requesting airline intends to change the clearances on hold as stated in the associated **C** or **M** data line(s) (i.e. the historics).

The change is subject to the proviso that the new clearance can be confirmed as requested or that a reasonable offer can be made.

Example

```
RAF802 AF810 26OCT27MAR 1234567 290AB3 NCE0900 1020LHR JJ
```

In case a coordinator is not able to offer the precise times requested, airlines are advised to use the Timing Flexibility Indicator and/or Supplementary Information (SI) to indicate any possible flexibility in timings.

Example

```
RAF802 AF810 26OCT27MAR 1234567 290AB3 NCE0900 1020LHR JJ
/ FA.08500920 FD.10001040/
SI PLS PROVIDE BEST AVAILABLE WITHIN RANGE
```

V New entrant with year round status **SCR**

Action Code **V** is used by an airline claiming new entrant status.

The code may be used to request new slot allocations as a continuation of a service that either has started or is planned to start in the previous **adjacent** Season (SCR procedure).

The service being requested must be a continuation from the previous adjacent Season (summer followed by winter or winter followed by summer) in UTC or Local Time at the Level 3 airport, or in UTC or Local Time at the origin/destination airport.

Airlines may request certain amendments to the slots of the previous adjacent Season from the clearance on hold in the previous adjacent Season. These may be submitted using Action Code **V**.

The following amendments are acceptable since they are **not** considered relevant to airport capacity constraints:

Flight Number change only (arrival and/or departure);
Reduction in aircraft capacity (Number of Seats).

Note: *Since the flight number may be used to identify slot allocations (clearances) in some coordinator systems, system problems may be encountered when a flight number is changed.*

Example

```
VNG7240 NG7810 26OCT27MAR 1234567 031FRJ BGY0910 1030BGY JJ
```

Y New data (Continuation from previous adjacent Season) **SCR**

Action Code **Y** may be used to request a new slot allocation for either a continuation of a service that has started or for a service that is planned to start in the previous **adjacent** Season.

The service being requested must be a continuation from the previous adjacent Season (summer followed by winter or winter followed by summer) in UTC or Local Time at the Level 3 airport, or in UTC or Local Time at the origin/destination airport.

Airlines may request certain amendments to clearances within the previous adjacent Season using Action Code **Y**.

The following amendments are acceptable since they are **not** considered relevant to airport capacity constraints:

Flight Number change only (arrival and/or departure);
Reduction in aircraft capacity (Number of Seats).

Example

```
YAF802 AF810 26OCT27MAR 1234567 290AB3 NCE0910 1030LHR JJ
```

Z Decline Offer or Remove from coordinators or facilitators database **SCR SMA WCR**

SCR Procedures

For the SCR procedures, Action Code **Z** is used by airline to indicate that the clearances being offered by coordinator are not acceptable. The coordinator will revert with a message confirming the cancellation of the offer and confirming the slot clearance details currently held.

The airline may choose to continue the SCR procedures either with a revised slot allocation request using a combination of Action Codes **C** and **R** or **M** and **R** combination or with a new slot allocation request using Action Code **N**.

Example

```
ZAF802 AF810 26OCT27MAR 1234567 290AB3 NCE0940 1050LHR JJ
ZAF802 AF810 26OCT27MAR 1234567 290AB3 NCE0900 1000LHR JJ
```

SMA Procedures

For SMA procedures, Action Code **Z** is used by the airline to indicate that the adjustments offered by facilitator are not acceptable.

The airline may choose to continue the SMA procedures either with a revised request using a combination of Action Codes **C** and **R** or with a new request using Action Code **N**.

If the airline chooses not to continue the SMA procedure, the original planned operation request will be maintained.

This will be confirmed to the airline by a SMA message using Action Code **K**.

WCR Procedure

For WCR procedures, Action Code **Z** is used by the airline to indicate to the coordinator or facilitator that the Waitlist request should be deleted from their database.

6.6.4 Codes to be used by the Airport Coordinator or Facilitator

H Holding, Return to Historic, Eligible for Historic Precedence or Holding (Voluntary Adjustment Offer) **SAL SAQ SCR SHL SIR SMA**

Use by Airport Coordinator Prior to SC

Action code H can be used by the coordinator in two ways:

SHL Procedure:

Action code H is used to confirm the clearances that are eligible for historic precedence in the next equivalent season. The data lines should reflect the dates and period of validity of the equivalent season for which the historic eligibility is granted. For the summer season, where historic eligibility is granted prior to the end of the summer season, this must be regarded as provisional until the season is completed.

SAL Procedure:

Action code H is used to advise that the requested slot allocations could not be confirmed, that the historic precedence has been retained and that the original request has been added to the Waitlist. In exceptional cases, Action Code **H** may be used in conjunction with Action Code **U** on the SAL to advise that the slot allocation requests have been cleared based on other capacity elements such as aircraft types.

Use by Airport Coordinator At or After the SC

Action Code **H** is used by a coordinator to specify confirmed clearances held by the coordinator (SIR procedure).

Action Code **H** is used by a coordinator in conjunction with Action Code **W** in SCR procedures to notify that a clearance held by the coordinator;

- either does not match the information contained in a **C** or **M** data line;
- or results in a flight designator duplication for the dates in question.

Action Code **H** is used by a coordinator in conjunction with Action Code **U** in response to **C/I, C/L** and **C/R** transactions (SCR procedure) to advise the airline that the revised slot allocation could not be cleared as requested (**U** data line) and that the existing clearance (**H** data line) will be maintained.

Action Code **H** is used by the coordinator in conjunction with Action Codes **U** and **O** to advise the airline that the revised slot allocation could not be cleared as requested (**U** data line) but offers are possible as indicated by Action Code **O**. The existing clearance (**H** data line) is maintained if the airline does not respond to the offers or does not accept any of the offers.

Action Code **H** is used by the coordinator in conjunction with Action Code(s) **X** in SCR procedures to inform the airline that, since the acceptance of an offer has not been received within 3 business days, all offers are cancelled (**X** data line). The existing clearance held by the airline (**H** data line) is maintained.

Use by Airport Coordinator in SAQ procedure

Action Code **H** is used by the coordinator in the SAQ procedure to advise that the existing clearance will be maintained (held) when an airline requests availability information for a possible change to the existing clearance.

Use by Facilitator

Action Code **H** is used by a facilitator to:

- notify the airline of detected mismatches and/or flight designator duplications (SMA procedure);
- specify planned operations previously advised by the airline (SIR procedure).

Example

```
HAF802 AF810 26OCT27MAR 1234567 290AB3 NCE0910 1030LHR JJ
```

I Availability information **SAQ**

Action Code **I** is used to provide slot availability information in response to an airline SAQ request message.

No action is taken by the coordinator to change or allocate clearances as a result of the request.

The format is the same as Action Code **O** except that no offers are being made.

Example

```
IAF802 AF810 26OCT27MAR 1234567 290AB3 NCE0910 1030LHR JJ
```

K Confirmation **SAL SCR SMA**

Action Code **K** is used to confirm to the airline that the slot allocation request has been cleared as requested.

Example

```
KAF802 AF810 26OCT27MAR 1234567 290AB3 NCE0910 1030LHR JJ
```

O Offer or Offer (Voluntary adjustment) **SAL SCR SIR SMA**

Use by Coordinator Prior to SC

Action Code **O** is used by a coordinator when the coordinator cannot allocate the clearance as requested, but can offer an acceptable clearance between the historic and the requested timings, or within any timing flexibility range indicated by the airline. △

In exceptional cases, Action Code **O** may be used in conjunction with Action Code **U** on the SAL to advise the airline that the slot allocations requests have been cleared based on other capacity elements such as aircraft types.

Use by Coordinator During or After the SC

Action Code **O** is used by a coordinator to:

- offer the nearest available clearance to those requested (SCR procedure);
- specify the clearances being offered (SIR procedure).

Action Code **O** will always be used in combination with a **U** data line that reflects the original slot allocation request except for improvements to the Waitlist originated by the coordinator (SCR procedures).

Use by Facilitator

Action Code **O** is used by a facilitator in SAL and SMA procedures to request an airline to consider an offer of a voluntary adjustment.

Acceptance of such offers are on voluntary basis and this procedure is only used in order to offer adjusted timings within the available airport capacity in an endeavor to avoid the airport having to consider moving to Level 3 status.

In exceptional cases, Action Code **O** can be used in combination with Action Code **U** in the SAL and SMA procedures where Action Code **U** is used to identify the original slot allocation request for tracking purposes by the airline.

The use of this combination does not have the same implications as a Refusal (Action Code U) at a Level 3 airport.

Example

```
OAF802 AF810 26OCT27MAR 1234567 290AB3 NCE0905 1015LHR JJ
```

P Pending Action or Advice **SCR SIR**

Action Code **P** (Pending Action) may be used in the SCR and SIR procedures when the acceptance or refusal of a slot allocation request is dependent on the acceptance or refusal of an offer made to another airline.

Action Code **P** must **not** be used by facilitators.

Action Code **P** (Pending Advice) may be used by a coordinator in a SCR message prior to the SC to acknowledge the receipt of the initial filings by an airline in an SCR message using Action Codes **B, F, I, L, N, R, V** or **Y**.

→ *Refer to SSIM 6.8.9 for details of the acknowledgement procedures*.

P Pending for Improvement **WCR WIR**

Action Code **P** is used in the WIR and WCR procedures to advise the airline of flights that have been placed in the coordinators or facilitators database for improvement.

In combination with Action Code **X**, it indicates that a new request has been placed in the coordinators or facilitators Waitlist.

In combination with Action Code **W**, it indicates that original Waitlist request has been retained since the coordinator was unable to reconcile the flight information.

Example

```
PAF802 AF810 26OCT27MAR 1234567 290AB3 NCE0910 1030LHR JJ
```

T Allocated Subject to Conditions **SAL SCR SHL SIR SMA**

Action Code **T** is used by a coordinator to:

- Indicate the clearances that are eligible for historic precedence in the next **equivalent** season but are subject to conditions (SHL procedure). The data lines should reflect the dates and periods of validity of the equivalent seasons for which the conditional historic eligibility is granted
- notify the airline that the slot allocation request has been cleared subject to certain conditions (SAL, SCR, SIR and SMA)

The slot clearance may be cancelled if the conditions are not fulfilled.

For example, this situation may occur when clearances may be allocated for an airline that has yet to obtain an operating license.

Examples

```
TAF802 AF810 26OCT27MAR 1234567 290AB3 NCE2200 03551LHR JJ
SI OPERATING LICENCE REQUIRED

TAF802 AF810 26OCT27MAR 1234567 290AB3 NCE2200 03551LHR JJ
/ SA.LICENCE SD.LICENCE/
```

U Refusal, Not Eligible for Historic Precedence, No Slot Allocated or Not Confirmed **SAL SAQ SCR SHL SIR SMA**

Use by Coordinator Prior to the SC

Action Code **U** is used by a coordinator in the SHL procedures to advise an airline that a clearance operated at a Level 3 airport in the previous **equivalent** season is not eligible for historic precedence (historic).

The reason why the clearance is not considered a historic must be provided with either a Coordinators Reason Code listed in Appendix J or an explanation in a SI line.

Example

```
UAF802 AF810 26OCT27MAR 1234567 290AB3 NCE0910 1030LHR JJ
/ CA.N80 CD.N80/
```

Action Code **U** is used by a coordinator in the SAL procedures prior to the SC to advise an airline that no definitive action can be taken on a request to change an existing clearance or on a request for a slot allocation for a new service.

It also indicates that a clearance has not been allocated and that there is no possibility of a reasonable offer.

Data lines with Action Code **U** will be automatically added to the Waitlist in the coordinators or facilitators database.

Example

```
UAF802 AF810 26OCT27MAR 1234567 290AB3 NCE0910 1030LHR JJ
/ CA.UA CD.UA/
SI NO TIMES AVAILABLE
```

In exceptional cases, for use in SAL only, Action Code **U** may be used in combination with Action Code **O** or **H** to advise the airline that the slot allocations requests have been cleared based on other capacity elements such as aircraft types.

Use by Coordinator During or After the SC

Action Code **U** is used by a coordinator in the SCR procedures during or after the SC to advise the airline that the request for a **new** or a revised slot allocation could not be cleared.

It also indicates that it was not possible to offer clearances as none are available.

The original slot allocation request will be automatically recorded in the coordinator's database.

When used in combination with Action Code **O** in the SCR procedures, Action Code **U** reflects the original slot allocation request.

It may also indicate that no clearance is available either before or after the offer(s) reflected in the **O** data line(s).

The original slot allocation request will be automatically recorded on the coordinator's database.

Action Code **U** will also be used in combination with Action Code **X** to confirm the deletion of an Offer generated by the coordinator but declined by the airline using Action Code **Z** when the resulting flight does not hold any slot time (no slotted). The **U** line will reflect the original slot allocation request and will include Coordination Reason Codes.

```
UAC824 AC825 27OCT29MAR 1234567 292333 YUL1030 1725YUL JJ
/ CA.GA CD.GA/
```

Use by Coordinator in SAQ Procedures

Action Code **U** is used by a coordinator in the SAQ procedures to advise an airline that there is no clearance available at the requested timings.

Example

```
UAF802 AF810 26OCT27MAR 1234567 290AB3 NCE0910 1030LHR JJ
```

Use by Facilitator

Action Code **U** is used by a facilitator in SAL and SMA procedures at Level 2 airports to advise that no definitive action can be taken on a request to change an existing planned operation or a request for a new service. This may be due to factors such as a night jet ban.

When used in combination with Action Code **O** in the SAL and SMA procedures, Action Code **U** is used by the facilitator to request the airline to consider a voluntary adjustment as reflected in the **O** data line(s).

In this context, Action Code **U** is used to identify the original request for tracking purposes by the airline and does not have the same implications as a 'Refusal' at a Level 3 airport.

Example

```
UAF802 AF810 26OCT27MAR 1234567 290AB3 NCE0910 1030LHR JJ
```

Use by Coordinator in SIR Procedures

Action Code U is used by a coordinator in the SIR procedures to advise an airline that a clearance has not been allocated.

```
SIR
/LHR1806
W05
23SEP
LHR
UAC824 AC825 30OCT25MAR 1234567 292333 YUL0800 1245YUL JJ
/ CA.GA CD.GA/
```

W Unable to reconcile flight information **SCR SMA WCR**

Action Code **W** is used by a coordinator in the SCR procedures or by a facilitator in the SMA procedures to advise that the request cannot be processed due to errors in the data submission. It is applicable to all Action Codes.

When flight(s) are held by the coordinator at another time or at another date/period/days of operation, Action Code **W** may be followed by corresponding **H** data line(s) to indicate the existing clearances held by the coordinator.

This action will allow the airline to correct its submission and avoid unintended deletions.

In WCR procedures, Action Code **W** is used by a coordinator to advise that changes to the Waitlist cannot be actioned as the flight information cannot be reconciled.

Action Code **W** may be followed by (a) corresponding **P** data line(s) to indicate the existing clearances held by the coordinator.

Examples

```
WAF802 AF810 26OCT27MAR 1234567 290734 NCE0910 1030LGW JJ
HAF802 AF810 26OCT27MAR 1234567 290AB3 NCE0910 1030LHR JJ
or
WAF802 AF810 26OCT27MAR 1234567 290734 NCE0910 1030LGW JJ
PAF802 AF810 26OCT27MAR 1234567 290AB3 NCE0910 1030LHR JJ
```

X Cancellation or Removed/Deleted from Waitlist **SCR SMA WCR**

Action Code **X** is used by a coordinator in the SCR procedure to confirm the deletion of a current clearance requested by the airline using Action Codes **C** or **M, D** or **E**.

Action Code X will be used in conjunction with Action Code **H** or Action Code **U** to confirm the deletion of an Offer generated by the coordinator but declined by the airline using Action Code **Z**.

It may also be used, in conjunction with Action Code **H**, or Action Code **U**, by the coordinator to advise that an offer(s) using Action Code **O** has been cancelled since no response was received from the airline within 3 business days of the offer being made.

When using Action Code **X**, the reply should contain only those Periods/Day(s) of Operation or dates effectively cancelled in the complete **C, M, D** or **E** data lines.

Action Code **X** is used by a facilitator in the SMA procedure to confirm the deletion of a planned operation as requested by the airline using Action Codes **C, D** or **E**.

In the WCR procedures, Action Code **X** is used by a coordinator to confirm the deletion of a Waitlist request by the airline using Action Codes **C, M** or **Z**.

Example

```
XAF802 AF810 26OCT27MAR 1234567 290AB3 NCE0910 1030LHR JJ
```

6.7 Incorrectly Formatted Messages

The rules governing action by coordinators and facilitators for handling incorrect message format are detailed below.

For a given flight designator and date at a specific airport, there can only be **one** planned arrival and/or **one** planned departure time allocated or advised.

SCR messages containing flights being amended by use of Action Codes **C** and **R** (or **C** and **L** or **C** and **I**) or by **M** and **R** (or **M** and **L** or **M** and **I**) or cancelled by Action Code **D** or **E** will only be actioned against those data lines for which the clearance information held by the Coordinator matches that contained in the **C, M, D** or **E** data lines.

For data lines for which there is a mismatch, the coordinator will take no action but respond using Action Code **W** against the submitted data line with the slot information currently held using Action Code **H**.

When no slots are held for the Days/Dates of Operation stated in the **C, M, D** or **E** data line, the coordinator shall reply with a “NIL” statement using Action Code **H**.

Example

```
WAF5402 AF5810 26OCT27MAR 1234567 290734 NCE0930 1020LGW JJ
HNIL
```

For SCR messages containing additional or new slot requests, the coordinator will take no action on those data lines that would result in flight designator duplication.

The coordinator will respond with a SCR message using Action Code **W** against the submitted data lines with the slot information currently held using Action Code **H**.

This will apply for slot requests sent with Action Code **N, F** or **I** and for those sent with Action Code **C/R, C/L, C/I, M/R, M/L,** or **M/I** combinations.

Example

Request

```
CAF802 AF810 26OCT27MAR 1234567 290734 NCE0910 1015LGW JJ
RAF802 AF810 26OCT27MAR 1234567 290734 NCE0930 1020LGW JJ
```

Reply from Coordinator

```
WAF802 AF810 26OCT27MAR 1234567 290734 NCE0910 1015LGW JJ
HAF802 AF810 26OCT27MAR 1234567 290AB3 NCE0910 1030LHR JJ
```

If an SCR message contains several data lines where changes are interrelated and one or more of these data lines cannot be processed due to format errors, the Coordinator will not take action on any of these data lines. He will however respond with an appropriate SCR, SMA or WCR message using Action Code **W** against the submitted data lines, together with the clearance information currently held using Action Code **H**.

For SCR data lines containing acceptance of offers using Action Code **A** for which there is a mismatch, the Coordinator will take no action. He will however respond using Action Code **W** against the submitted data line with the clearance information currently held on offer using Action Code **O**.

When an Airline wants to change several flights in one message (i.e. several changes/new/deletions), he should always place the **C, M, D** and **E** records prior to the corresponding **R, L, Y** or **N** records that have the same Flight Designator(s) whenever the same date/period is involved.

6.8 Slot Allocation Procedures

The Slot Allocation Procedures defined in the Section are applicable to Level 3 airports for the allocation of slots at these airports. The procedures may be used for initial coordination (i.e. prior to SC), during or after SC.

Some of the procedures may occur throughout the whole slot coordination process.

As soon as all SAL's are distributed, coordinators must make their database available to all airlines that submitted an SCR for that airport. This database must contain details by airline, of all requested slots and all allocated slots in a format that excludes flight number and route details to avoid conflict with competition laws in the world. Flight numbers should be replaced with ‘0000’ and airports with ‘XXX’ (Example: `HA0000 26OCT28MAR 1234567 180320 XXXXXX2325 J`).

6.8.1 Initial Coordination Procedures

The Initial Coordination Procedures are undertaken prior to the SC and these may consist of the following:

- Historic Slot Determination
- Airline Procedures for Filing for a New Season
- Initial Slot Allocation

A diagram of the message exchange flows between airlines and coordinators with message types and relevant action codes is presented below.

△

Basic Exchange Flows for Initial Coordination

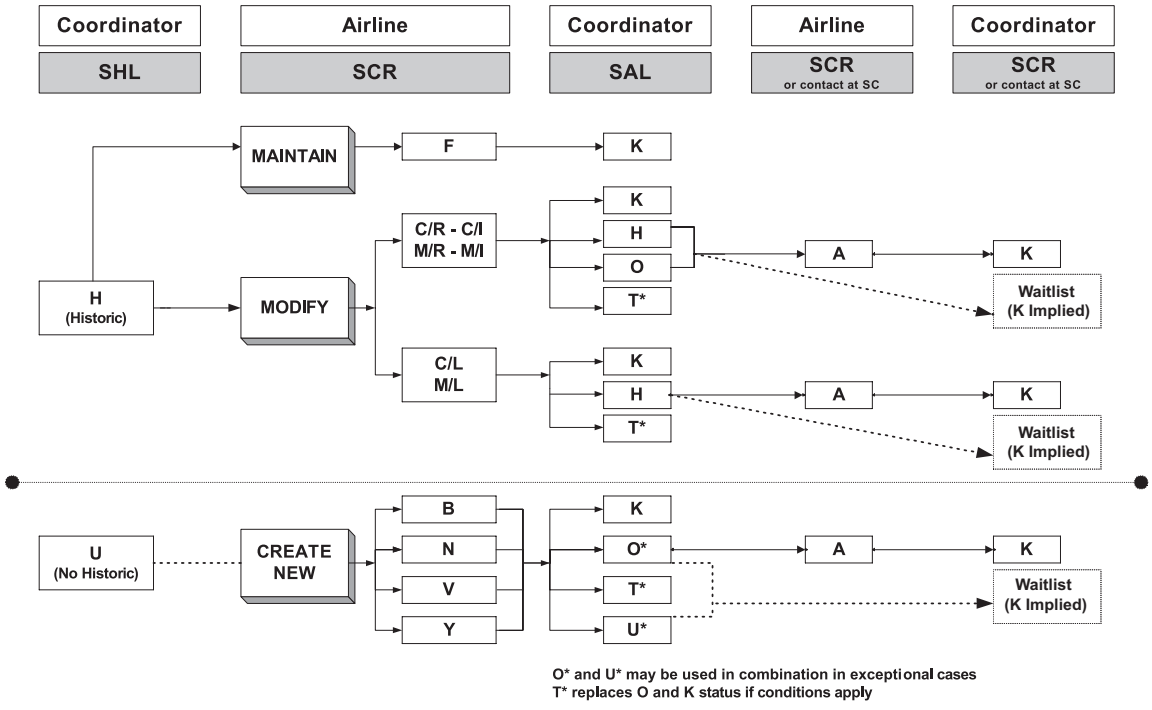

6.8.1.1 Historic Slot Determination Procedure

Before the historic slot distribution deadline for a new scheduling Season, coordinators will advise each airline whether its slots operated in the previous equivalent season are eligible or not eligible for historic precedence (historics).

For the summer season, where historics are granted prior to the end of the summer season, the historics must be regarded as provisional until the season is completed.

The historic slot information is provided electronically in an SHL message by the coordinator and the listing must be provided no later than the dates specified in the WSG.

The Period of Operation for historic slots, as stated in the SHL, must reflect the dates adjusted for the forthcoming Season. For records covering the entire Period of Operation, the start and end dates **must** reflect the start and end dates of the new Season.

When operated flights do not cover the entire Period of Operation, the start and end dates of the historics should be the dates closest (i.e. earlier or later) to the respective dates applicable to the same Day(s) of Operation of the previous season.

This will also include the extension or contraction of a full season series of slots by one week if the Season is a week longer or shorter than the previous equivalent Season.

When flight records have become fragmented due to changes such as ad hoc cancellations or aircraft type changes during the previous equivalent season, the coordinator must ‘reconstruct’ the records of those flights that qualify for historic status to create a single historic record for each flight.

This must be completed prior to the distribution of the SHLs to airlines and must comply with the coordination parameters established at the airport.

The SHL message from the coordinator will contain data lines using Action Code H for slots that have earned historic precedence and Action Code U for slots that are have not earned historic precedence.

The airline will consider the receipt of the historics (H lines) as confirmation of the right to continue operating these slots for the next equivalent season.

Data lines preceded with Action Code **U** will identify the reason why the slots are not eligible for historic rights. The Coordinator Reason(s) will be provided in the additional information data line either using the Coordinator Reason Codes listed in SSIM Appendix J or by free text in an SI Line.

For transit and turnaround flights, a historic may be established for the arrival flight but not for the departure flight (or vice versa). When this occurs, the data lines will be divided into separate arrival and departure lines with the relevant Action Code (**H** or **U**).

For historics for new entrants, the **H** data lines may contain Coordinator Reason Code(s) to indicate that there are limitations on the continued use of these historics.

If this occurs, airlines will need to contact the coordinator for an explanation.

Example

```
SHL
/FRA1004ZZ
W03
10APR
FRA
HZZ123 ZZ124 29OCT24MAR 0030567 154734 TKU1200 1300TKU JJ2
/ CA.NE CD.NE/
HZZ500 ZZ501 29OCT24MAR 1234567 180752 LHR1055 1200LHR JJ
HZZ257 ZZ257 30OCT28DEC 1204000 00073X DUSCGN2330 00301VIE FF
UZZ257 ZZ257 03JAN21MAR 0030000 00073X DUSCGN2300 2355VIEKLU FF
/ CA.N80 CD.N80/
HZZ3988 ZZ3989 29OCT24MAR 0004000 35674C SINBKK1400 1500BKKSIN QQ
UZZ187 29OCT24MAR 0000500 154734 MAN0805 C / CA.MU/
H ZZ188 29OCT24MAR 0000500 154734 0910MAN C
```

When an airline requested a coordinator to provide the historics as **unlinked** flights, the coordinator will separate the historics into arrival and departure flights using Action Code H.

Example of linked historics

```
SHL
/HISTAZ
W03
10APR
AMS
HAZ100 AZ101 26OCT27MAR 1234567 131M80 FCO0800 0910FCO JJ
HAZ102 AZ103 26OCT27MAR 1235467 075ER4 MXP0810 0900MXP JJ
```

Example of unlinked historics

```
SHL
/HISTAZ
W03
10APR
AMS
HAZ100 26OCT27MAR 1234567 131M80 FCO0800 J
HAZ102 26OCT27MAR 1235467 075ER4 MXP0810 J
H AZ101 26OCT27MAR 1234567 131M80 0910FCO J
H AZ103 26OCT27MAR 1235467 075ER4 0900MXP J
```

When a slot is not considered eligible as a historic, the airline must file a new slot allocation request if the intention is to continue to operate the slots.

The SHL message from the coordinator may contain clearances which are eligible for historic precedence but have conditions attached. For example if an airport has adjusted its night curfew regulations from the previous equivalent season and the aircraft type used in the previous season is now excluded from operating in the curfew period. When this occurs the data line will be preceded with Action Code **T** and either the message SI text or the Status Information additional elements will be used to advise the airline the conditions attached to the clearance.

Examples of Action Code T in SHL message

```
SHL
/HISTAZ
W03
10APR
AMS
T AZ7101 29OCT24MAR 0030000 131M80 2210FCO C
SI AZ7101 M80 NO LONGER OK FOR NIGHT OPERATION STP SEE NEW CURFEW RULES
```

```
SHL
/HISTAZ
W03
10APR
AMS
T AZ7101 29OCT24MAR 0030000 131M80 2210FCO C
/ SD.CURFEW/
```

6.8.1.2 Airline Procedures for Filing for a New Season

In order to maintain or modify historic slots and/or to request new slot allocations, the airline will use the following filing procedures with the appropriate Action Codes or combination of Action Codes in an SCR Message:

FILING PROCEDURE	ACTION CODE(S)
Maintain Historics	**F**
Modify Historics	
• Offers acceptable	**C** and **R** or **M** and **R**
• Offers not acceptable	**C** and **L** or **M** and **L**
• Continuation from previous adjacent Season–offers acceptable	**C** and **I** or **M** and **Ir**
New request	**N**
New request with New Entrant Status	**B**
New request with New Entrant Status with year round status – Continuation from previous adjacent Season	**V**
New request with year round Status – Continuation from previous adjacent Season	**Y**

Code **N** cannot be used to file existing clearances holding historic precedence.

Action Code **F** must be used when maintaining status quo for existing historics.

When filing for changes to historics, Action Code combinations **C/I, C/L, C/R, M/I, M/L, M/R** shall be used.

Under no circumstances shall these transactions be used to expand Day(s) and/or Period of Operation.

They may, however, be used to contract Day(s) and/or Period of Operation.

When filing to maintain or modify historics using the **F, C/L, C/R, C/I, M/I, M/L** or **M/R** procedures, airlines should base their filings on the **H** data line from the SHL.

When filing to modify historics issued with conditions using the **C/R, C/I, M/R** or **M/I** procedures, airlines should base their filings on the **T** data line from the SHL.

Arrival and departure flights from different **H** data lines may not be combined unless unlinked **H** data lines are being used.

Action Codes **V** or **Y** must be used to file for a new series of slot allocations operated in the previous **adjacen**t Season.

Action Codes **B** or **N** must be used to file for either a new series of slot allocations or for slot allocations on individual dates.

When filing changes or new requests with the above Action Codes (except **C/L, M/L** or **F**), airlines may use the Timing Flexibility Identifier and/or Supplementary Information (SI) lines to indicate the range of timings for acceptable offers.

It is recommended that airlines file separate messages when using the SI line or Timing Flexibility Identifier.

Note: *Since the flight number may be used to identify slot allocations (clearances) in some coordinator systems, system problems may be encountered when a flight number is changed.*

6.8.1.3 Maintain Historics

F Procedure

The airline uses the historic slot information provided by the coordinator as the basis for filing for the forthcoming equivalent Season and as the right to continue operating the historic slots.

Each request must be filed with a SCR message using Action Code **F** to replace the Action Code **H** data line provided in the SHL message.

Coordinators may bilaterally agree with an airline to accept filings using Action Code **F** that include modifications to the **H** data line. These modifications cannot be capacity relevant items. Examples of non capacity items are change of aircraft type (when non-capacity relevant) and/or reduction in number of seats.

Slot allocation requests using Action Code **F** will always be validated by the coordinator to ensure the correct application of the code.

Example

```
SHL
/CPH1004AF
W03
10APR
CPH
HAF802 AF810 26OCT27MAR 1234567 290AB3 FCONCE0910 1030LHRMAN JJ
HAF808 AF812 26OCT27MAR 1234567 126733 MRS1855 2010FRA JJ
```

```
SCR
/AF1005CPH
W03
10MAY
CPH
FAF802 AF810 26OCT27MAR 1234567 245AB3 FCONCE0910 1030LHRMAN JJ
FAF808 AF812 26OCT27MAR 1234567 126733 MRS1855 2010FRA JJ
```

When the airline requested that its historics be unlinked in order to change the slots, the airline submits a SCR message with Action Code **F** to confirm that the historics are to remain unlinked.

When the airline chooses to maintain unlinked flights, the coordinator cannot guarantee that the minimum or maximum ground times of the airline will be respected in the final result on the SAL.

Example *of confirmation of unlinked historics*

```
SHL
/CPH1004AF
W03
10APR
CPH
HAF802 AF810 26OCT27MAR 1234567 290AB3 FCONCE0910 1030LHRMAN JJ
HAF808 26OCT27MAR 1234567 126733 MRS1855 J
H AF812 26OCT27MAR 1234567 126733 2010FRA J

SCR
/AF1005CPH
W03
10MAY
CPH
FAF802 AF810 26OCT27MAR 1234567 245AB3 FCONCE0910 1030LHRMAN JJ
FAF808 26OCT27MAR 1234567 126733 MRS1855 J
F AF812 26OCT27MAR 1234567 126733 2010FRA J
```

6.8.1.4 Modify Historics

C/R or M/R Procedure—Offers Acceptable

An airline may use the **C/R** or **M/R** procedure to request changes to their historics.

The use of **C/R** or **M/R** indicates to the coordinator that the airline will accept offers and that the historic precedence can be replaced by the clearance being offered.

When using the **C/R** or **M/R** procedure to request changes to historics, the airline is entitled to maintain the historic if the request is only to change non-capacity relevant items.

For each slot to be changed, the airline submits a SCR message with:

- a data line with Action Code C or M to identify the clearance on hold (i.e. the historic);
- one or more data lines with Action Code R to indicate the revised slot allocation request.

The airline may indicate a range of acceptable timings using either the Timing Flexibility Identifier or the SI (Supplementary Information) line.

Examples

```
SHL
/AF1004CPH
W03
10APR
CPH
HAF802 AF810 26OCT27MAR 1234567 290AB3 FCONCE0910 1030LHRMAN JJ
SCR
/AF1005CPH
W03
10MAY
CPH
CAF802 AF810 26OCT27MAR 1234567 290AB3 FCONCE0910 1030LHRMAN JJ
RAF802 AF810 26OCT27MAR 1234567 290AB3 FCONCE0920 1050LHRMAN JJ
or
SCR
/AF1005CPH
W03
10MAY
CPH
CAF802 AF810 26OCT27MAR 1234567 290AB3 FCONCE0910 1030LHRMAN JJ
RAF802 AF810 26OCT31DEC 1234567 290AB3 FCONCE0920 1050LHRMAN JJ
/ FA.09100940 FD.10301115/
RAF802 AF810 01JAN27MAR 1234567 287AB4 FCONCE0920 1050LHRMAN JJ
/ FA.09100940 FD.10301115/
SI ALL UTC
or
SCR
/AF1005CPH
W03
10MAY
CPH
MAF802 AF810 26OCT27MAR 1234567 290AB3 FCONCE0910 1030LHRMAN JJ
RAF802 AF810 26OCT27MAR 1234567 290AB3 FCONCE0800 0920LHRMAN JJ
```

When the airline requested that its historics be unlinked in order to change the slot, the airline submits a SCR message with:

- data lines with Action Code C or M to identify the unlinked arrival and departure clearances on hold (i.e. the appropriate unlinked arrival and departure historics);
- one or more data lines with Action Code R to indicate the revised slot allocation request(s). The revised slot allocation request can be submitted either as linked or unlinked flights.

When the airline chooses to maintain unlinked flights, the coordinator cannot guarantee that the minimum or maximum ground times of the airline will be respected in the final result on the SAL.

Example of relinking of unlinked historics

```
SHL
/HISTAZ
W03
10APR
AMS
HAZ100 26OCT27MAR 1234567 131M80 FCO0800 J
HAZ102 26OCT27MAR 1235467 075ER4 MXP0810 J
H AZ101 26OCT27MAR 1234567 131M80 0910FCO J
H AZ103 26OCT27MAR 1235467 075ER4 0900MXP J
```

```
SCR
/AZSUB
W03
11MAY
AMS
CAZ100 26OCT27MAR 1234567 131M80 FCO0800 J
C AZ103 26OCT27MAR 1234567 075ER4 0900MXP J
RAZ100 AZ101 26OCT27MAR 1234567 171321 FCO0800 0900FCO JJ
CAZ102 26OCT27MAR 1234567 075ER4 MXP0810 J
C AZ101 26OCT27MAR 1234567 131M80 0910FCO J
RAZ102 AZ103 26OCT27MAR 1234567 131M80 MXP0810 0910MXP JJ
```

C/L or M/L Procedure—Offers Not Acceptable

An airline may use the **C/L** or **M/L** procedure to request changes to the historics.

The use of **C/L** or **M/L** indicates to the coordinator that the airline will retain the historic precedence if the requested slot allocation cannot be confirmed.

When using the **C/L** or **M/L** procedure to request changes to historics, the airline is entitled to maintain the historic if the request is only to change non-capacity relevant items.

For each slot to be changed, the airline submits a SCR message with:

- a data line with Action Code **C** or **M** to identify the clearance on hold (i.e. the historic);
- one or more data lines with Action Code **L** to indicate the revised slot allocation request.

Example

```
SHL
/CPH10004AF
W03
10APR
CPH
HAF802 AF810 26OCT27MAR 1234567 290AB3 FCONCE0910 1030LHRMAN JJ
```

```
SCR
/AF1005CPH
W03
10MAY
CPH
CAF802 AF810 26OCT27MAR 1234567 290AB3 FCONCE0910 1030LHRMAN JJ
LAF802 AF810 26OCT27MAR 1234567 290AB3 FCONCE0920 1050LHRMAN JJ
```

An airline can request that its historics be unlinked in order to change the slot.

For details and examples, refer 6.8.1.4 Modify Historics **C/R** or **M/R** Procedure—Offers Acceptable replacing Action Code **R** with Action Code **L**.

C/I or M/I Procedure—Continuation from Previous Adjacent Season—Offers Acceptable

An airline uses the **C/I** or **M/I** procedure to change a slot operated in the previous **adjacent** Season into a slot to be operated on a year-round basis.

All provisions of the **C/R** or **M/R** procedure are applicable to the **C/I** or **M/I** procedure.

Extension of the frequencies or to the Period of Operation is not permitted when using **C/I** or **M/I** combinations prior to the SC.

For each slot to be changed, the airline submits a SCR message with:

- a data line with Action Code C or M to identify the clearance on hold (i.e. the historic);
- one or more data lines with Action Code I to indicate the revised slot allocation request.

Furthermore, the airline may indicate within the SI (Supplementary Information) data line whether the slot is a continuation from the previous Season in:

- UTC or Local Time at the Level 3 airport;

or

- Local Time at the origin airport;

or

- Local Time at the destination airport.

Example

```
SHL
/CPH1004AF
W03
10APR
CPH
HAF808 AF812 26OCT27MAR 1234567 126733 MRS1855 2010FRA JJ

SCR
/AF1005CPH
W03
10MAY
CPH
CAF808 AF812 26OCT27MAR 1234567 126733 MRS1855 2010FRA JJ
IAF808 AF812 26OCT27MAR 1234567 126733 MRS1845 1955FRA JJ
SI CONTINUATION FROM PREVIOUS SEASON IN LOCAL TIME
ALL TIMES ARE UTC
```

An airline can request that its historics be unlinked in order to change the slot.

For details and examples, refer 6.8.1.4 Modify Historics: **C/R** or **M/R** Procedure—Offers Acceptable replacing Action Code **R** with Action Code **I**.

C/R, C/I, M/R or M/I Procedure for Clearances Allocated with Conditions

An airline may use the **C/R, C/I, M/R** or **M/I** procedure to request changes to the historics allocated with conditions in order to meet these conditions.

Example

```
SHL
/HISTAZ
W03
10APR
AMS
T AZ7101 29OCT24MAR 0030000 131M80 2210FCO C
SI M80 NO LONGER OK FOR NIGHT OPERATION STP SEE NEW CURFEW RULES
SCR
/
W03
10APR
AMS
C AZ7101 29OCT24MAR 0030000 131M80 2210FCO C
R AZ7101 29OCT24MAR 0030000 130320 2210FCO C
SI AIRCRAFT CHANGE TO MEET NEW NIGHT CURFEW RULES
```

6.8.1.5 New Slots and/or New Entrants Filings

New slot allocation requests using Action Codes **B, N, V** and **Y** will always be validated by the coordinator to ensure the correct application of the codes.

N Procedure—New Slot

An airline uses the **N** procedure to request a slot allocation for an entirely new service (i.e. one that not been previously operated) or for a slot without any historic precedence.

For each new slot allocation request, the airline submits a SCR message with:

- a data line with Action Code N to identify the required slot allocation;

or

- a data line with Action Code N to identify the required slot allocation with;
- either an optional additional data line to indicate the Timing Flexibility range;
- and/or optional SI data lines(s) to indicate the timing range for acceptable offers.

Action Code **N** may also be used after the SC to file ad hoc requests for individual flights using the same procedures for flights operated on a regular basis.

Examples - Transit/Turnaround Flights

```
SCR
/BA1005FRA
W03
10MAY
FRA
NBA8127 BA8135 26OCT27MAR 1234567 190321 DUBMAN0855 0955LGWGLA JJ
```

```
SCR
/BA1005FRA
W03
10MAY
FRA
NBA8127 BA8135 26OCT27MAR 1234567 190321 DUBMAN0855 0955LGWGLA JJ
SI DEPARTURE TIMES BETWEEN 0940 AND 1010 OK
```

```
SCR
/BA1005FRA
W03
10MAY
FRA
NBA8127 BA8135 26OCT27MAR 1234567 190321 DUBMAN0855 0955LGWGLA JJ
/ FD.09401010/
```

```
SCR
/BA1005FRA
W03
10MAY
FRA
NBA8127 BA8135 26OCT27MAR 1234567 190321 DUBMAN0855 0955LGWGLA JJ
/ FD.09401010/
SI DEPARTURE TIMES BETWEEN 0940 AND 1010 OK
```

Examples - Arrival Flight

```
SCR
/DL11OCT
S04
11OCT
MUC
NDL076 11MAY 178762 CVGJFK0715 G
```

Examples - Departure Flight

```
SCR
/DL25OCT
S04
25OCT
FRA
N BA963 10MAY 131733 1220BHXMAN G
```

B Procedure—New Slot with New Entrant Status

An airline uses the **B** procedure to request a slot allocation for a new service to be operated under its new entrant status and that does not have any historic precedence.

For each new slot allocation request, the airline submits a SCR message with:

- a data line with Action Code **B** to identify the required slot allocation;

or

- a data line with Action Code **B** to identify the required slot allocation with;
- either an optional additional data line to indicate the Timing Flexibility range;
- and/or an optional SI data lines(s) to indicate the timing range for acceptable offers.

Example

→ *Refer to N Procedure above and replace Action Code **N** with Action Code **B**.*

V Procedure—New Slot with New Entrant Status with Year Round Status (Continuation from previous adjacent Season)

An airline uses the **V** procedure to request a slot allocation for a new service to be operated under its new entrant status as a continuation of a service from the previous adjacent Season.

For each new slot allocation request, the airline submits a SCR message with:

- a data line with Action Code **V** to identify the required slot allocation;

or

- a data line with Action Code **V** to identify the required slot allocation with;
- either an optional additional data line to indicate the Timing Flexibility range;
- and/or an optional SI data lines(s) to indicate the timing range for acceptable offers.

The airline should indicate within the SI (Supplementary Information) data line whether the slot is a continuation from the previous Season in:

- UTC or Local Time at the Level 3 airport;

or

- Local Time at the origin airport;

or

- Local Time at the destination airport.

Example

→ *Refer to N Procedure above and replace Action Code **N** with Action Code **V**.*

Y Procedure New Slot with year round status—(Continuation from previous adjacent Season)

An airline uses the **Y** filing procedure to request a new slot to align its requested slot with the services operated during the previous adjacent season.

For each new slot allocation request, the airline submits a SCR message with:

- a data line with Action Code **Y** to identify the required slot allocation;

or

- a data line with Action Code **Y** to identify the required slot allocation with;
- either an optional additional data line to indicate the Timing Flexibility range;
- and/or an optional SI data lines(s) to indicate the timing range for acceptable offers.

Example

→ *Refer to N Procedure above and replace Action Code **N** with Action Code **Y**.*

6.8.2 Coordinator Response: Initial Slot Allocation (SAL)

The coordinator will respond to the airline requests with a SAL message using relevant Action Codes to advise the airline of the action taken.

If slots cannot be confirmed as requested, the coordinator will advise the airline using the appropriate Coordinator Reason Code(s) as listed in SSIM Appendix J and provided in the additional information data line.

For data lines with combinations of Action Codes **U** and **T**, the coordinator should respond with separate lines for arrivals and departures—**unless** both arrivals and departures have the same Action Code.

For a data line where either the arrival or the departure of a linked flight cannot be confirmed the coordinator will use the Action Code appropriate to the non confirmed leg (either Action Code H or O) against the whole data line. The coordinator will indicate with coordinator reason code OK that the other leg of the flight is cleared as requested.

```
OEW881 EW882 05MAY27JUN 1234500 042AT3 NUE1135 1220NUE JJ
/ CA.OK CD.AA RD.1230/
```

For data lines where a combination of Action Codes H and O are applicable the coordinator will always use Action Code O.

Example

```
SAL
/FRA0406ZZ
W03
04JUN
FRA
KZZ123 ZZ124 26OCT27MAR 0030567 154734 TKU1200 1300TKU JJ
/ CA.NE CD.NE/
OZZ500 ZZ501 26OCT27MAR 1234567 180752 LHR1055 1200LHR JJ
/ CA.OK CD.T030/
OZZ257 ZZ257 30OCT28DEC 1204000 00073X DUSCGN2055 2155VIEKLU FF
/ RA.2105 RD.2200 CA.R030 CD.NA/
UZZ187 14NOV 154734 MAN0850 0910MAN GP/ CA.UA CD.UA/
```

The following table summarizes the possible coordinator responses.

COORDINATOR RESPONSE to AIRLINE REQUEST	ACTION CODE(S)
Maintain Historics (**F**)	**K**
Modify Historics	
• Offers acceptable (**C/R, M/R**)*	**K, H, O, T**
• Offers not acceptable (**C/L, M/L**)	**K, H, T**
• Continuation from previous adjacent Season–offers acceptable (**C/I, M/I**)*	**K, H, O, T**
New request (**N**)	**K, O, T, U**

COORDINATOR RESPONSE to AIRLINE REQUEST	ACTION CODE(S)
New request with New Entrant Status (**B**)	**K, O, T, U**
New request with New Entrant Status with year round status – Continuation from previous adjacent Season (**V**)	**K, O, T, U**
New request with year round status – Continuation from previous adjacent Season (**Y**)	**K, O, T, U**

* In exceptional cases, Action Codes **H** and **O** can be combined with Action Code **U**.

6.8.2.1 Maintain Historics

Response to F Procedure

When an airline has advised that it will continue to operate the historics without any changes, the coordinator will confirm the historic clearances with a SAL message using Action Code **K**.

Example

```
SCR
/AF1005
W03
10MAY
CPH
FAF802 AF810 26OCT27MAR 1234567 290AB3 FCONCE0910 1030LHRMAN JJ
FAF808 AF812 26OCT27MAR 1234567 126733 MRS1855 2010FRA JJ

SAL
/CPH0806
W03
08JUN
CPH
REYT/AF1005
KAF802 AF810 26OCT27MAR 1234567 290AB3 FCONCE0910 1030LHRMAN JJ
KAF808 AF812 26OCT27MAR 1234567 126733 MRS1855 2010FRA JJ
```

6.8.2.2 Response to C/R or M/R and C/I or M/I Procedures—Offer Acceptable

Confirmation

When the coordinator can allocate the clearance as requested, this will be confirmed to the airline by a SAL message using Action Code **K**.

The historic slot will be replaced by the new slot **and** returned to the slot pool, i.e. the information in the **C** or **M** data line is replaced by the information in the **R** or **I** data lines.

Example

```
SHL
/CPHAF1004
W03
10APR
CPH
HAF802 AF810 26OCT27MAR 1234567 290AB3 FCONCE0910 1030LHRMAN JJ
```

```
SCR
/AF1005
W03
10MAY
CPH
CAF802 AF810 26OCT27MAR 1234567 290AB3 FCONCE0910 1030LHRMAN JJ
RAF802 AF810 26OCT27MAR 1234567 290AB3 FCONCE0920 1050LHRMAN JJ

SAL
/CPHAF0806
W03
08JUN
REYT/AF1005
CPH
KAF802 AF810 26OCT27MAR 1234567 290AB3 FCONCE0920 1050LHRMAN JJ
```

Offer

When the coordinator **cannot** allocate the clearance as requested, but **can** offer an acceptable clearance between the historic and the requested timings, this will be confirmed to the airline in a SAL message using Action Code **O**.

The historic slot will be replaced by the new slot **and** returned to the slot pool, i.e. the information in the **C** or **M** data line is replaced by the information in the **R** or **I** data lines.

The slot request (**R** or **I** data line) will be automatically recorded on the coordinator's Waitlist for improvement.

In exceptional cases, Action Code **O** can be used in combination with Action Code **U** to indicate to the airline that slots have been cleared based on other capacity elements such as aircraft types.

Example

```
SCR
/AF1005
W03
10MAY
HEL
CAF802 AF810 27OCT29MAR 1234567 188321 CDG0910 1030LYSNCE JJ
RAF802 AF812 27OCT29MAR 1234567 126733 CDG0920 1050LYSNCE JJ

SAL
/HEL0806
W03
08JUN
HEL
REYT/AF1005
OAF802 AF812 27OCT29MAR 1234567 126733 CDG0915 1035LYSNCE JJ
/ CA.R010 CD.R020 RA.0920 RD.1050/
```

Holding

When the coordinator **cannot** allocate the clearance as requested and **cannot** offer an acceptable clearance within any timing parameters specified by the airline, the historics, as stated in the associated **C** or **M** data lines will be maintained.

This will be confirmed to the airline by a SAL message using Action Code **H**.

The slot request (**R, L** or **I** data line) will be automatically recorded on the coordinator's Waitlist for improvement.

In exceptional cases, Action Code **H** can be used in combination with Action Code **U** to indicate to the airline that slots have been cleared based on other capacity elements such as aircraft types.

Example

```
SCR
/AF10MAY
W03
10MAY
HEL
CAF802 AF810 27OCT29MAR 1234567 188321 CDG0910 1030LYSNCE JJ
RAF802 AF812 27OCT29MAR 1234567 188321 CDG0920 1050LYSNCE JJ
SI WE ACCEPT OFFER FOR ARR BETWEEN 0910/0940 AND FOR DEP BETWEEN 1030/1115
```

or

```
SCR
/AF10MAY
W03
10MAY
HEL
CAF802 AF810 27OCT29MAR 1234567 188321 CDG0910 1030LYSNCE JJ
RAF802 AF810 27OCT29MAR 1234567 188321 CDG0920 1050LYSNCE JJ
/ FA.09100940 FD.10301115/
```

```
SAL
/HEL08JUN
W03
08JUN
HEL
REYT/AF10MAY
HAF802 AF810 27OCT29MAR 1234567 188321 CDG0910 1030LYSNCE JJ
/ CA.R010 CD.R020 RA.0920 RD.1050/
```

Allocated Subject to Conditions

When constraints or unusual circumstances are placed on the allocation of clearances, a coordinator may allocate a temporary clearance subject to the conditions being met.

This will be confirmed to the airline by a SAL message using Action Code **T**.

The temporary clearance may be cancelled if the conditions are not met.

If and when the conditions are met, the coordinator may either confirm the clearance using Action Code **K** or may offer a clearance within the acceptable range using Action Code **O**.

Example

```
SCR
/AF10MAY
W03
10MAY
HEL
CAF808 AF812 27OCT29MAR 1234567 126733 MRS2020 2150CDG JJ
RAF808 AF812 27OCT29MAR 1234567 126733 MRS2035 2205CDG JJ

SAL
/HEL08JUN
W03
08JUN
HEL
REYT/AF10MAY
TAF808 AF812 27OCT29MAR 1234567 126733 MRS2035 2205CDG JJ
SI SUBJECT TO NIGHT QUOTA FINAL APPROVAL

or

SAL
/HEL08JUN
W03
08JUN
HEL
REYT/AF10MAY
TAF808 AF812 27OCT29MAR 1234567 126733 MRS2035 2205CDG JJ
/ SD.NIGHTQUOTA/
```

Refusal

In exceptional cases and when Action Code **U** is used in combination with Action Codes **H** or **O** to indicate to the airline that slots have been cleared based on other capacity elements such as aircraft types, the **U** data line denotes the original request.

Example

```
SCR
/SV10MAY
W03
10MAY
BRU
CSV802 SV810 27OCT29MAR 1234567 000M11 JED2055 2230JFK FF
RSV802 SV812 27OCT29MAR 1234567 00074F JED2055 2230JFK FF
```

```
SAL
/BRU08JUN
W03
08JUN
BRU
REYT/AF10MAY
HSV802 SV810 27OCT29MAR 1234567 000M11 JED2055 2230JFK FF
USV802 SV812 27OCT29MAR 1234567 00074F JED2055 2230JFK FF
SI AIRCRAFT NOT ALLOWED TO OPERATE DURING NIGHT CURFEW
```

6.8.2.3 Response to C/L or M/L Procedure—No Offer Acceptable

Confirm

When the coordinator can allocate the clearance as requested, this will be confirmed to the airline by a SAL message using Action Code **K**.

The historic slot held by the airline will be replaced by the new slot **and** returned to the slot pool. The information in the **C** or **M** data line is replaced by the information in the **L** data lines.

Example

```
SCR
/AF10MAY
W03
10MAY
CPH
CAF802 AF810 26OCT27MAR 1234567 290AB3 FCONCE0910 1030LHRMAN JJ
LAF802 AF810 26OCT27MAR 1234567 290AB3 FCONCE0850 1010LHRMAN JJ
```

```
SAL
/CPH08JUN
W03
08JUN
CPH
REYT/SV10MAY
KAF802 AF810 26OCT27MAR 1234567 290AB3 FCONCE0850 1010LHRMAN JJ
```

Holding

When the coordinator **cannot** allocate the clearance as requested within any timing parameters specified by the airline, the historics, as stated in the associated **C** or **M** data lines, will be maintained.

This will be confirmed to the airline by a SAL message using Action Code **H**.

The outstanding request (**L** data line) will be automatically placed on the coordinator's Waitlist for improvement.

Example

```
SCR
/AF10MAY
W03
10MAY
FRA
CAF802 AF810 26OCT27MAR 1234567 290AB3 FCONCE0910 1030LHRMAN JJ
LAF802 AF810 26OCT27MAR 1234567 290AB3 FCONCE0850 1010LHRMAN JJ

SAL
/FRA08JUN
W03
08JUN
FRA
REYT/AF10MAY
HAF802 AF810 26OCT27MAR 1234567 290AB3 FCONCE0910 1030LHRMAN JJ
/ CA.R060 CD.R060 RA.0850 RD.1010/
```

6.8.2.4 Response to New Requests

Confirm

When the coordinator can allocate the new clearance as requested, this will be confirmed to the airline by a SAL message using Action Code **K**.

Example

```
SCR
/AC10MAY
W03
10MAY
LHR
NAC824 AC825 27OCT29MAR 1234567 292333 YUL1030 1725YUL JJ

SAL
/LHR08JUN
W03
08JUN
LHR
REYT/AC10MAY
KAC824 AC825 27OCT29MAR 1234567 292333 YUL1030 1725YUL JJ
```

Offer

When the coordinator cannot allocate the clearance as requested, the coordinator should offer the nearest available earlier or later slot. This will be confirmed to the airline by a SAL message using Action Code **O**.

The outstanding request will be automatically recorded on the coordinator's Waitlist for improvement.

Example

```
SAL
/LHR08JUN
W03
08JUN
LHR
REYT/AC10MAY
OAC824 AC825 27OCT29MAR 1234567 292333 YUL0930 1625YUL JJ
/ CA.RA CD.RA RA.1030 RD.1725/
```

In exceptional cases, the coordinator may use Action Code **O** in combination with Action Code **U** to indicate that slot allocations were cleared on other capacity elements such as aircraft type. Refer to 'Refusal' below for procedures.

Allocated Subject to Conditions

When an airline has yet to meet the necessary provisions/permissions to operate, a coordinator may allocate a temporary clearance subject to the conditions being met.

This will be confirmed to the airline by a SAL message using Action Code **T**.

The temporary clearance may be cancelled if the conditions are not met.

Example

```
SAL
/LHR08JUN
W03
08JUN
LHR
TYYY024 YYY025 27OCT29MAR 1234567 292333 YOW1030 1725YOW JJ
/ SA.LICENCE SD.LICENCE/
```

Refusal

When the coordinator **cannot** allocate the clearance as requested and **cannot** offer any other choices, the airline will be advised that a clearance has **not** been allocated.

This will be confirmed to the airline by a SAL message using Action Code **U**.

The outstanding request will automatically be recorded on the coordinator's Waitlist for improvement.

Example

```
SAL
/REFER
W03
08JUN
LHR
UAC824 AC825 27OCT29MAR 1234567 292333 YUL1030 1725YUL JJ
/ CA.RA CD.RA/
```

6.8.3 Airline Action Prior To SC

The airline has the option to either accept the offers (Action Codes **H** and **O**) provided on the coordinator SAL or take no action so that all slot allocation requests are automatically placed in the coordinator's database for improvement.

Prior to the SC, airlines must advise the coordinator when existing clearances are no longer required.

The following table summarizes the possible airline responses to the coordinator SAL.

AIRLINE RESPONSE to COORDINATOR SAL	ACTION CODE(S)
Modify Historics	
• Return to Historic (**H**) (**C/R, C/I, C/L,** M/**R,** M/**I,** M/**L** procedures)	**A**
• Offer (**O**) (**C/R, C/I,** M/**R,** M/**I** procedures)	**A**
• Delete (unwanted) slot (**K**)	**D**
New request	
• Offer (**O**) (B, N, V, Y procedures)	**A**
• Delete (unwanted) slot (K)	**D**

The airline will confirm its acceptance of the clearance being offered (Action Code **O**) or being held (Action Code **H**) by responding to the coordinator with an SCR message using Action Code **A**.

The use of Action Code **A** by the airline indicates that it will not be seeking further improvement on the clearance offered.

If the airline does not respond to an offer (Action Codes **H** and **O**), the offer is considered as being accepted.

The slot allocation request is recorded in the coordinator's Waitlist.

Example

```
SCR
/AF10MAY
W03
10MAY
CPH
CAF808 AF812 27OCT29MAR 1234567 126733 MRS0920 1050FRA JJ
RAF808 AF812 27OCT29MAR 1234567 126733 MRS0935 1105FRA JJ
/ FA.09200950 FD.10501140/

SAL
/CPH08JUN
W03
08JUN
CPH
REYT/AF10MAY
OAF808 AF812 27OCT29MAR 1234567 126733 MRS0940 1135FRA JJ
```

```
SCR
/AF10JUN
W03
10JUN
CPH
REYT/CPH08JUN
AAF808 AF812 27OCT29MAR 1234567 126733 MRS0940 1135FRA JJ
```

If the coordinator was able to offer clearances both before and after the allocation request, the airline is expected to confirm its acceptance of one of the offers.

Example

```
SCR
/AF10MAY
W03
10MAY
CPH
CAF808 AF812 27OCT29MAR 1234567 126733 MRS0920 1050FRA JJ
RAF808 AF812 27OCT29MAR 1234567 126733 MRS0935 1105FRA JJ

SAL
/CPH08JUN
W03
08JUN
CPH
REYT/AF10MAY
OAF808 AF812 27OCT29MAR 1234567 126733 MRS0930 1050FRA JJ
/ CA.R010 CD.R030 RA.0935 RD.1105/
OAF808 AF812 27OCT29MAR 1234567 126733 MRS0945 1135FRA JJ
/ CA.R010 CD.R030 RA.0935 RD.1105/

SCR
/AF10JUN
W03
10JUN
CPH
REYT/CPH08JUN
AAF808 AF812 27OCT29MAR 1234567 126733 MRS0945 1135FRA JJ
```

When, prior to the SC, an airline determines that it will not be operating the slots either for a historic or a new clearance, the airline must advise the coordinator with an SCR message using Action Code **D**.

The airline is advised that, when using Action Code **D**, the clearance will be returned to the slot pool.

Example

```
SCR
/AF10MAY
W03
10MAY
CPH
CAF808 AF812 27OCT29MAR 1234567 126733 MRS0920 1050FRA JJ
RAF808 AF812 27OCT29MAR 1234567 126733 MRS0935 1105FRA JJ

SAL
/CPH08JUN
W03
08JUN
CPH
REYT/AF10MAY
KAF808 AF812 27OCT29MAR 1234567 126733 MRS0935 1105FRA JJ

SCR
/AF10JUN
W03
10JUN
CPH
REYT/CPH08JUN
DAF808 AF812 27OCT29MAR 1234567 126733 MRS0935 1105FRA JJ
```

Note: *Use of Action Code P during the initial coordination procedures is implied if no action is taken by the airlines. This indicates that the clearance on offer is 'acceptable' but further improvement on the clearance will be sought. Until confirmation is provided by the airline, the coordinators will record the request in their Waitlist.*

6.8.4 Coordinator Action Prior to SC

When an airline accepts an offer prior to the start of SC, the coordinator will confirm the clearance with an SCR using Action Code **K**.

If the airline has not responded to the offer(s) (Action Codes **H** and **O**) nor contacted the coordinator at SC, the coordinator will automatically confirm the offer at the end of SC.

The original slot allocation request is placed in the coordinators Waitlist for improvement.

If there was more than one offer for the same request and there has been no response from the airline, the coordinator will automatically confirm one of the offers and delete the others at the end of SC.

The coordinator must confirm this action to the airline immediately after the close of SC with an SCR message.

If an airline advised the coordinator using Action Code **D** that it will not be operating a slot, the coordinator will confirm the cancellation of the slot with an SCR message using Action Code **X**.

Note: *Use of Action Code **P** during the Initial Coordination procedures is implied if no action is taken by the airlines. This indicates that the clearance on offer is 'acceptable' but further improvement on the clearance will be sought.*

Until confirmation is provided, the coordinator will record the slot allocation request in its Waitlist.

6.8.5 During or After the SC Coordination Procedures—Airline Filing Procedures

A diagram of the message exchange flows between airlines and coordinators during, or after SC, using the SCR message with relevant action codes is presented below.

During or After SC (SCR Message)

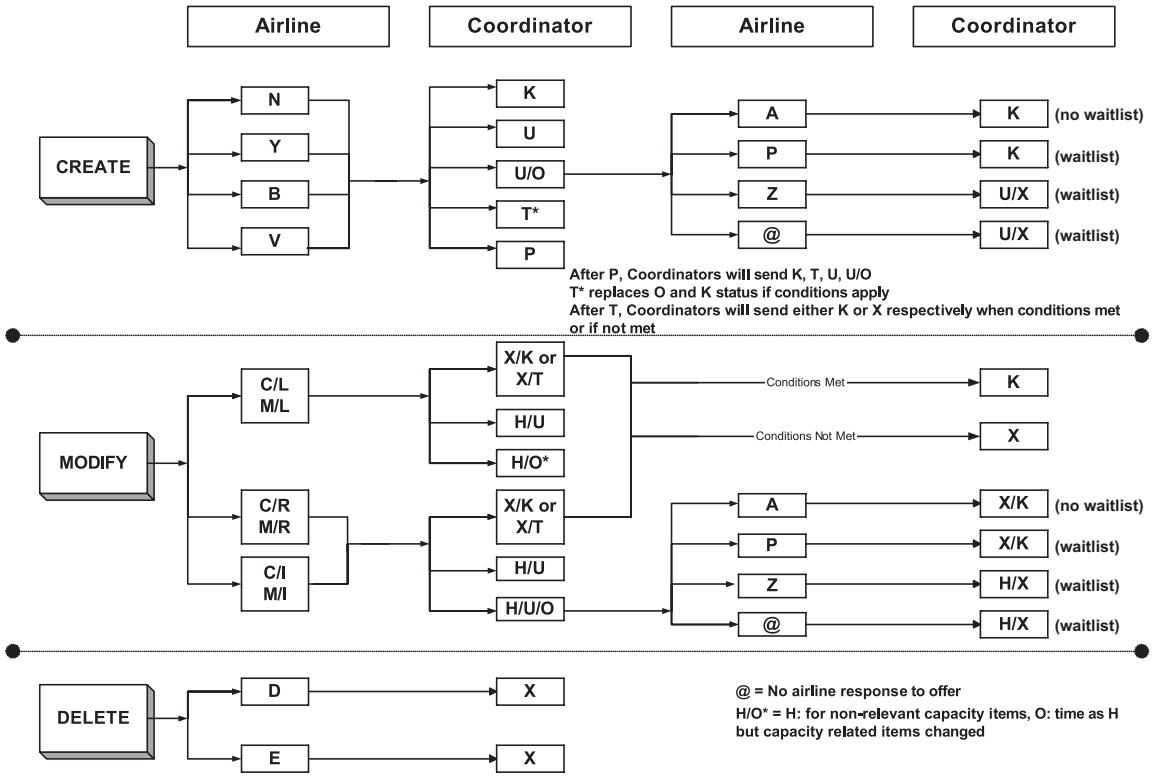

An airline will use the following filing procedures with the appropriate Action Codes or combination of Action Codes in an SCR Message to request new slot allocations, to request amendments to existing clearances or to delete or eliminate existing clearances.

FILING PROCEDURE	ACTION CODE(S)
Modify Existing Clearances	
• Offers acceptable	**C** and **R** or **M** and **R**
• Offers not acceptable	**C** and **L** or **M** and **L**
• Continuation from previous adjacent Season–offers acceptable	**C** and **I** or **M** and **I**
New request	**N**
New request with New Entrant Status	**B**

FILING PROCEDURE	ACTION CODE(S)
New request with New Entrant Status with year round status – Continuation from previous adjacent Season	**V**
New request with year round status – Continuation from previous adjacent Season	**Y**
Delete	**D**
Eliminate	**E**

When filing changes or new requests with the above Action Codes (except **C/L, M/L, D** and **E**), airlines may use the Timing Flexibility Identifier and/or Supplementary Information (SI) lines to indicate the range of timings for acceptable offers.

It is recommended that airlines file separate messages when using the SI line or Timing Flexibility Identifier.

Note: *Since flight numbers may be used to identify slot allocations (clearances) in some coordinator systems, system problems may be encountered when a flight number is changed using Action Codes **V** or **Y**.*

6.8.5.1 Modify Existing Clearances

C/R or M/R Procedure—Offers Acceptable

An airline uses the **C/R** or **M/R** procedure to request changes to existing clearances.

The request may include both capacity relevant and non-capacity relevant items.

The use of **C/R** or **M/R** indicates to the coordinator that the airline will accept offers and that the existing clearance can be replaced by the clearance being offered.

For each clearance to be changed, the airline submits a SCR message with:

- a data line with Action Code **C** or **M** to identify the existing clearance;
- one or more data lines with Action Code **R** to indicate the revised slot allocation request.

The airline may indicate a range of acceptable timings using either the Timing Flexibility Identifier or the SI (Supplementary Information) line.

Example

```
SCR
/AF1506
W03
15JUN
CPH
CAF802 AF810 26OCT27MAR 1234567 290AB3 FCONCE0910 1030LHRMAN JJ
RAF802 AF810 26OCT27MAR 1234567 290AB3 FCONCE0920 1050LHRMAN JJ
```

```
or
SCR
/AF1506
W03
15JUN
CPH
CAF802 AF810 26OCT27MAR 1234567 290AB3 FCONCE0910 1030LHRMAN JJ
RAF802 AF810 26OCT31DEC 1234567 290AB3 FCONCE0920 1050LHRMAN JJ
/ FA.09100940 FD.10301115/
RAF802 AF810 01JAN27MAR 1234567 287AB4 FCONCE0920 1050LHRMAN JJ
/ FA.09100940 FD.10301115/
SI ALL UTC
```

Example–Change in Timings

```
SCR
/AF1506
W03
15JUN
CPH
CAF802 AF810 26OCT27MAR 1234567 290AB3 FCONCE0910 1030LHRMAN JJ
RAF802 AF810 26OCT27MAR 1234567 290AB3 FCONCE0920 1050LHRMAN JJ
```

C/L or M/L Procedure—Offers Not Acceptable

An airline uses the **C/L** or **M/L** procedure to request changes to existing clearances.

The use of **C/L** or **M/L** indicates to the coordinator that the airline will retain the existing clearance **if** the requested slot allocation cannot be confirmed.

For each change, the airline submits a SCR message with:

- a data line with Action Code **C** or **M** to identify the existing clearance;
- one or more data lines with Action Code **L** to indicate the revised slot allocation request.

Example

```
SCR
/AF1506
W03
15JUN
CPH
CAF802 AF810 26OCT27MAR 1234567 290AB3 FCONCE0910 1030LHRMAN JJ
LAF802 AF810 26OCT27MAR 1234567 290AB3 FCONCE0920 1050LHRMAN JJ
```

C/I or M/I Procedure—Continuation from Previous Adjacent Season—Offers Acceptable

An airline uses the **C/I** or **M/I** procedure to change an operation to align with an equivalent operation in the previous **adjacent** Season to be operated on a year-round basis.

The request may include both capacity relevant and non-capacity relevant items.

All provisions of the **C/R** or **M/R** procedure are applicable to the **C/I** or **M/I** procedure.

For each change, the airline submits a SCR message with:

- a data line with Action Code **C** or **M** to identify the existing clearance;
- one or more data lines with Action Code **I** to indicate the revised slot allocation request.

Furthermore, the airline may indicate within the SI (Supplementary Information) data line whether it is a continuation from the previous Season in:

- UTC or Local Time at the particular airport;

or

- Local Time at the origin airport;

or

- Local Time at the destination airport.

Example

```
SCR
/AF1506
W03
15JUN
CPH
CAF808 AF812 26OCT27MAR 1234567 126733 MRS1855 2010FRA JJ
IAF808 AF812 26OCT27MAR 1234567 126733 MRS1845 1955FRA JJ
SI CONTINUATION FROM PREVIOUS SEASON IN LOCAL TIME
```

Example–Change in Timings

```
SCR
/AF1506
W03
15JUN
CPH
CAF808 AF812 26OCT27MAR 1234567 126733 MRS1855 2010FRA JJ
IAF808 AF812 26OCT27MAR 1234567 126733 MRS1845 1955FRA JJ
SI CONTINUATION FROM PREVIOUS SEASON IN LOCAL TIME
```

Example–Change in Timings and Non-Capacity Relevant Item

```
SCR
/AF1506
W03
15JUN
CPH
CAF802 AF810 26OCT27MAR 1234567 290AB3 FCONCE0910 1030LHRMAN JJ
IAF802 AF810 26OCT27MAR 1234567 290AB3 NAPNCE0850 1010LHRLHR JJ
```

Modify a clearance previously allocated subject to conditions

An airline may use one of above procedures to request changes to existing clearances that have been allocated subject to conditions. The request may include both capacity relevant and non-capacity relevant items.

For each clearance to be changed, the airline submits a SCR message with:

- a data line with Action Code **C** or **M** to identify the existing clearance held subject to conditions;
- one or more data lines with Action Code **R, L** or **I** to indicate the revised slot allocation request.

The airline may indicate a range of acceptable timings using either the Timing Flexibility Identifier or the SI (Supplementary Information) line.

6.8.5.2 New Requests and/or New Entrants

An airline will use the following filing procedures with the appropriate Action Codes or combination of Action Codes in an SCR Message to request new slot allocations.

Slot allocation requests using Action Codes **B, N, V** and **Y** will always be validated by the coordinator to ensure the correct application of the codes.

→ *Refer to New requests and/or New Entrants Procedures in the Initial Coordination Procedures above for details and examples*.

6.8.5.3 Delete

An airline uses the **D** procedure to delete an existing clearance.

Example

```
SCR
/SR1509
W03
15SEP
FRA
DLX700 LX701 01NOV30NOV 1234567 129319 ZRH0915 0955ZRH JJ
```

6.8.5.4 Eliminate

An airline uses the **E** procedure to permanently delete (eliminate) all clearances on a general level for a Season or to eliminate specific flights.

Airlines are cautioned to use this Action Code correctly to avoid losing their clearances.

Example

```
SCR
/LH1610
W03
16OCT
PER
ELH LH
SCR
/LH1710
W03
17OCT
CDG
ELH116 LH117
```

6.8.6 During or After the SC Coordination Procedures—Coordinator Response to Airline Filing

The coordinator will use the following filing procedures with the appropriate Action Codes or combination of Action Codes in an SCR Message to respond to requests for new slot allocations, requests to amend existing clearances or requests to delete or eliminate existing clearances.

COORDINATOR RESPONSE to AIRLINE REQUEST	ACTION CODE(S)
Modify Existing Clearances	
• Offers acceptable (**C/R, M/R**)	**H/U, H/U/O, X/K, X/T**
• Offers not acceptable (**C/L, M/L**) H/O*: only to be used in exceptional cases	**H/O*, H/U, X/K, X/T**
• Continuation from previous adjacent Season—offers acceptable (**C/I, M/I**)	**H/U, H/U/O, X/K, X/T**
New request (**N**)	**K, P, T, U, U/O**
New request with New Entrant Status (**B**)	**K, P, T, U, U/O**
New request with New Entrant Status with year round status – Continuation from previous adjacent Season (**V**)	**K, P, T, U, U/O**
New request with year round status – Continuation from previous adjacent Season (**Y**)	**K, P, T, U, U/O**
Delete (**D**)	**X**
Eliminate (**E**)	**X**

6.8.6.1 Response to C/R or M/R and C/I or M/I Procedures—Offer Acceptable

Confirmation

When the coordinator can allocate the clearance as requested, this will be confirmed to the airline by a SCR message using Action Codes **X** and **K**.

The previous clearance will be replaced by the new clearance **and** returned to the slot pool. The information in the **R** or **I** data lines replaces the information in the **C** or **M** data line.

The cancellation of the existing clearance is confirmed to the airline by using Action Code **X**. The new clearance is confirmed by using Action Code **K**.

Example

```
SCR
/AF1506
W03
15JUN
CPH
CAF802 AF810 26OCT27MAR 1234567 290AB3 FCONCE0910 1030LHRMAN JJ
RAF802 AF810 26OCT27MAR 1234567 290AB3 FCONCE0920 1050LHRMAN JJ
```

```
SCR
/CPHAF1806
W03
18JUN
CPH
REYT/AF1506
XAF802 AF810 26OCT27MAR 1234567 290AB3 FCONCE0910 1030LHRMAN JJ
KAF802 AF810 26OCT27MAR 1234567 290AB3 FCONCE0920 1050LHRMAN JJ
```

Holding—Offer Possible

When the coordinator **cannot** confirm the slot allocation requests but can make an offer, the existing clearances will be maintained until the offer is accepted, or refused by the airline. If the airline has not responded to the offer within 3 business days, the coordinator will advise the offer is no longer valid and that the existing clearance has been maintained.

The airline will be advised of the offer(s) using a combination of Action Codes **H, U** and **O** where:

- Action Code **H** is used to identify the existing clearance and is the first data line in the SCR;
- Action Code **U** is used to identify the slot allocation request;
- Action Code **O** is used to identify the offer(s) being made.

The coordinator should offer the nearest available earlier or later timing and this will be advised to the airline using one **O data line**.

The coordinator may make offers **before and after** the slot allocation request and these will be advised to the airline using two **O data lines**.

The slot allocation request (**R** data line) will be automatically recorded in the coordinator's Waitlist for improvement.

Example

```
SCR
/AF1506
W03
15JUN
CPH
CAF802 AF810 26OCT27MAR 1234567 290AB3 FCONCE0910 1030LHRMAN JJ
RAF802 AF810 26OCT27MAR 1234567 290AB3 FCONCE0850 1010LHRMAN JJ
```

Offer possible

```
SCR
/CPH1806
W03
18JUN
CPH
REYT/AF1506
HAF802 AF810 26OCT27MAR 1234567 290AB3 FCONCE0910 1030LHRMAN JJ
UAF802 AF810 26OCT27MAR 1234567 290AB3 FCONCE0850 1010LHRMAN JJ
OAF802 AF810 26OCT27MAR 1234567 290AB3 FCONCE0840 1000LHRMAN JJ
```

Offers possible before and after Request

```
SCR
/CPH1806
W03
18JUN
CPH
REYT/AF1506
HAF802 AF810 26OCT27MAR 1234567 290AB3 FCONCE0910 1030LHRMAN JJ
UAF802 AF810 26OCT27MAR 1234567 290AB3 FCONCE0850 1010LHRMAN JJ
OAF802 AF810 26OCT27MAR 1234567 290AB3 FCONCE0840 1000LHRMAN JJ
OAF802 AF810 26OCT27MAR 1234567 290AB3 FCONCE0900 1020LHRMAN JJ
```

Holding—No Offer Possible

When the coordinator **cannot** confirm the slot allocation requests and cannot make a reasonable offer, the existing clearances will be maintained.

Action Code **H** is used to identify the existing clearance and Action Code **U** is used to advise that the slot allocation request cannot be confirmed.

The slot allocation request (**R** data line) will be automatically recorded in the coordinator's Waitlist for improvement.

Example

```
SCR
/AF1506
W03
15JUN
CPH
CAF802 AF810 26OCT27MAR 1234567 290AB3 FCONCE0910 1030LHRMAN JJ
RAF802 AF810 26OCT27MAR 1234567 290AB3 FCONCE0850 1010LHRMAN JJ
```

```
SCR
/CPH1806
W03
18JUN
CPH
REYT/AF1506
HAF802 AF810 26OCT27MAR 1234567 290AB3 FCONCE0910 1030LHRMAN JJ
UAF802 AF810 26OCT27MAR 1234567 290AB3 FCONCE0850 1010LHRMAN JJ
```

When a slot allocation request included both capacity and non-capacity relevant items and the coordinator is unable to clear the requested slot allocation request and cannot make a reasonable offer, the coordinator will reply with an offer equal to the timings of the existing clearance.

Such an offer will reflect changes in any capacity non-relevant items.

Action Code **H** is used to identify the existing clearance and is the first data line in the SCR.

Action Code **U** is used to identify the slot allocation request and is used in conjunction with Action Code **O** to identify the offer being made at the timings of the existing clearance.

Example

```
SCR
/AF1506
W03
15JUN
CPH
CAF802 AF810 26OCT27MAR 1234567 290AB3 FCONCE0910 1030LHRMAN JJ
RAF802 AF810 26OCT27MAR 1234567 290AB3 NAPNCE0850 1010LHRLHR JJ
```

```
SCR
/CPH1806
W03
18JUN
CPH
REYT/AF1506
HAF802 AF810 26OCT27MAR 1234567 290AB3 FCONCE0910 1030LHRMAN JJ
UAF802 AF810 26OCT27MAR 1234567 290AB3 NAPNCE0850 1010LHRLHR JJ
OAF802 AF810 26OCT27MAR 1234567 290AB3 NAPNCE0910 1030LHRLHR JJ
```

6.8.6.2 Response to C/L or M/L Procedure; No Offer Acceptable

Confirmation

When the coordinator can allocate the clearance as requested, this will be confirmed to the airline by a SCR message using Action Codes **X** and **K**.

The previous clearance will be replaced by the new clearance **and** returned to the slot pool. The information in the **L** data lines replaces the information in the **C** or **M** data line.

The cancellation of the existing clearance is confirmed to the airline by using Action Code **X**. The new clearance is confirmed by using Action Code **K**.

Example

```
SCR
/AF1506
W03
15JUN
CPH
CAF802 AF810 26OCT27MAR 1234567 290AB3 FCONCE0910 1030LHRMAN JJ
LAF802 AF810 26OCT27MAR 1234567 290AB3 FCONCE0920 1050LHRMAN JJ

SCR
/CPHAF1806
W03
18JUN
CPH
REYT/AF1506
XAF802 AF810 26OCT27MAR 1234567 290AB3 FCONCE0910 1030LHRMAN JJ
KAF802 AF810 26OCT27MAR 1234567 290AB3 FCONCE0920 1050LHRMAN JJ
```

Holding

When the coordinator **cannot** confirm the slot allocation requests, the existing clearances will be maintained.

Action Code **H** is used to identify the existing clearance and Action Code **U** is used to advise that the slot allocation request cannot be confirmed.

The slot allocation request (**L** data line) will be automatically recorded in the coordinator's Waitlist for improvement.

Example

```
SCR
/AF1506
W03
15JUN
CPH
CAF802 AF810 26OCT27MAR 1234567 290AB3 FCONCE0910 1030LHRMAN JJ
LAF802 AF810 26OCT27MAR 1234567 290AB3 FCONCE0850 1010LHRMAN JJ

SCR
/CPH1806
W03
18JUN
CPH
REYT/AF1506
HAF802 AF810 26OCT27MAR 1234567 290AB3 FCONCE0910 1030LHRMAN JJ
UAF802 AF810 26OCT27MAR 1234567 290AB3 FCONCE0850 1010LHRMAN JJ
```

6.8.6.3 Response to Modify a Clearance Previously Allocated Subject to Conditions

When a coordinator can allocate a revised clearance as requested but the original condition(s) for allocation continue to exist or new one(s) become appropriate this will be confirmed to the airline by an SCR message using Action Codes **X** and **T**.

Example

```
SCR
/AF1806
W03
18JUN
CPH
CAF802 AF810 26OCT27MAR 1234567 290AB3 FCONCE2110 2230LHRMAN JJ
RAF802 AF810 26OCT27MAR 1234567 290AB3 FCONCE2220 2350LHRMAN JJ
```

```
SCR
/CPHAF1806
W03
18JUN
CPH
REYT/AF1506
XAF802 AF810 26OCT27MAR 1234567 290AB3 FCONCE2110 2230LHRMAN JJ
TAF802 AF810 26OCT27MAR 1234567 290AB3 FCONCE2220 2350LHRMAN JJ
SI SLOTS SUBJECT TO SUFFICIENT NIGHT NOISE QUOTA BEING AVAILABLE
```

or

```
SCR
/CPHAF1806
W03
18JUN
CPH
REYT/AF1506
XAF802 AF810 26OCT27MAR 1234567 290AB3 FCONCE2110 2230LHRMAN JJ
TAF802 AF810 26OCT27MAR 1234567 290AB3 FCONCE2220 2350LHRMAN JJ
/ SA.NIGHTQUOTA SD.NIGHTQUOTA/
```

6.8.6.4 Response to New Requests

Confirm

When the coordinator can allocate the new clearance as requested, this will be confirmed to the airline by a SCR message using Action Code **K**.

Example

```
SCR
/AC1506
W03
15JUN
LHR
NAC824 AC825 27OCT29MAR 1234567 292333 YUL1030 1725YUL JJ
```

```
SCR
/LHR1806
W03
18JUN
LHR
REYT/AC1506
KAC824 AC825 27OCT29MAR 1234567 292333 YUL1030 1725YUL JJ
```

Unable—Offer Possible

When the coordinator **cannot** allocate the requested slot allocations but can make an offer, this will be confirmed to the airline using a combination of Action Codes **U** and **O** where;

- Action Code **U** is used to identify the slot allocation request and is the first data line in the SCR;
- Action Code **O** is used to identify the offer(s) being made.

The coordinator should offer the nearest available earlier or later timing and this will be advised to the airline using one **O data line**.

The coordinator may make offers **before and after** the slot allocation request and these will be advised to the airline using two **O data lines**.

The slot allocation request (**N** data line) will be automatically recorded in the coordinator's Waitlist for improvement.

Example

```
SCR
/AC1506
W03
15JUN
LHR
NAC824 AC825 27OCT29MAR 1234567 292333 YUL1030 1725YUL JJ
```

Offer possible

```
SCR
/LHR1806
W03
18JUN
LHR
REYT/AC1506
UAC824 AC825 27OCT29MAR 1234567 292333 YUL1030 1725YUL JJ
OAC824 AC825 27OCT29MAR 1234567 292333 YUL1100 1745YUL JJ
```

Offers possible before and after Request

```
SCR
/LHR1806
W03
18JUN
LHR
REYT/AC1506
UAC824 AC825 27OCT29MAR 1234567 292333 YUL1030 1725YUL JJ
OAC824 AC825 27OCT29MAR 1234567 292333 YUL1015 1700YUL JJ
OAC824 AC825 27OCT29MAR 1234567 292333 YUL1100 1745YUL JJ
```

Pending

When the requested slot allocation has been offered to another airline, the coordinator will advise the (requesting) airline that action on its request is dependent on the acceptance or refusal of the offer by the other airline. This will be advised to the (requesting) airline by a SCR message using Action Code **P**.

When the coordinator is able to action the request, he will advise the airline using the appropriate Action Code **K, T, U** or **U/O**.

Example

```
SCR
/AC1506
W03
15JUN
LHR
NAC824 AC825 27OCT29MAR 1234567 292333 YUL1030 1725YUL JJ

SCR
/LHR1806
W03
18JUN
LHR
REYT/AC1506
PAC824 AC825 27OCT29MAR 1234567 292333 YUL1030 1725YUL JJ
```

Allocated Subject to Conditions

When an airline has yet to meet the necessary provisions/permissions to operate, a coordinator may allocate a clearance on a temporary basis.

This will be confirmed to the airline by a SCR message using Action Code **T**.

The temporary clearance may be cancelled if the conditions are not met.

Example

```
SCR
/REFER
W03
18JUN
LHR
TAC824 AC825 27OCT29MAR 1234567 292333 YUL1030 1725YUL JJ
/ SA.LICENCE SD.LICENCE/
```

Unable

When the coordinator **cannot** allocate the clearance as requested and **cannot** offer any other choices, the airline will be advised that a clearance has **not** been allocated.

This will be confirmed to the airline by a SCR message using Action Code **U**.

The requested slot allocation will be placed in the coordinator's Waitlist for improvement.

Example

```
SCR
/LHR1806
W03
18JUN
LHR
REYT/AC1506
UAC824 AC825 27OCT29MAR 1234567 292333 YUL1030 1725YUL JJ
```

6.8.6.5 Response to D and E Procedures

Confirmation

The coordinator will confirm the deletion or elimination of clearances using Action Code **X**.

Example

```
SCR
/LX1509
W03
15SEP
FRA
DLX700 LX701 01NOV30NOV 1234567 129319 ZRH0915 0955ZRH JJ
```

```
SCR
/FRA16SEP
W03
16SEP
FRA
REYT/LX1509
XLX700 LX701 01NOV30NOV 1234567 129319 ZRH0915 0955ZRH JJ
```

```
SCR
/LH1610
W03
16OCT
PER
ELH LH
SCR
/PER1810
W03
18OCT
PER
REYT/LH1610
XLH111 LH112 26OCT27MAR 0000007 332744 FRAKUL0800 1800KULFRA JJ
XLH114 LH115 26OCT27MAR 0030000 332744 FRASIN0820 1835SINFRA JJ
SCR
/LH1710
W03
17OCT
CDG
ELH116 LH117
SCR
/CDG1910
W03
19OCT
CDG
REYT/LH1710
XLH116 LH117 26OCT27MAR 1234500 103735 MUC0800 0850MUC JJ
XLH116 LH117 26OCT27MAR 0000067 050CR1 MUC0800 0850MUC JJ
```

6.8.7 Airline Response During or After SC

The airline has the option to accept an offer (Action Code **A**), to decline an offer (Action Code **Z**) or to accept an offer but request improvement (Action Code **P**).

The following table summarizes the possible airline responses to the coordinator offer.

AIRLINE RESPONSE to COORDINATOR OFFER	ACTION CODE(S)
Modify Existing Clearances	
• Offer (**H/U/O**) (**C/R, M/R, C/I, M/I** procedures)	**A, P, Z**
New/New Entrant	
• Offer (**U/O**) (**B, N, V, Y** procedures)	**A, P, Z**

6.8.7.1 Modify Existing Clearances and New/New Entrant

Acceptance

The airline will confirm its acceptance of (one of) the clearance(s) being offered by responding to the coordinator with an SCR message using Action Code **A**.

The use of Action Code **A** by the airline indicates that it will not be seeking further improvement on the clearance offered.

If the original request included changes to non-capacity items, acceptance of the offer by the airline results in these changes being actioned by the coordinator.

Example

```
SCR
/AF1506
W03
15JUN
CPH
CAF802 AF810 26OCT27MAR 1234567 290AB3 FCONCE0910 1030LHRMAN JJ
RAF802 AF810 26OCT27MAR 1234567 290AB3 FCONCE0850 1010LHRMAN JJ

SCR
/CPH1806
W03
18JUN
CPH
REYT/AF1506
HAF802 AF810 26OCT27MAR 1234567 290AB3 FCONCE0910 1030LHRMAN JJ
UAF802 AF810 26OCT27MAR 1234567 290AB3 FCONCE0850 1010LHRMAN JJ
OAF802 AF810 26OCT27MAR 1234567 290AB3 FCONCE0900 1020LHRMAN JJ

SCR
/AF2006
W03
20JUN
CPH
REYT/CPH1806
AAF802 AF810 26OCT27MAR 1234567 290AB3 FCONCE0900 1020LHRMAN JJ
```

Acceptance with Improvement

The airline will provisionally confirm its acceptance of (one of) the clearance(s) being offered by responding to the coordinator with an SCR message using Action Code **P**.

The use of Action Code **P** by the airline indicates that it will be seeking further improvement on the clearance offered and will expect, upon receipt of action code **P** from an airline, the coordinator to place the original slot allocation request in the coordinator's Waitlist.

If the original request included changes to non-capacity items, the provisional acceptance of the offer by the airline results in these changes being actioned by the coordinator.

Example

```
SCR
/AF1506
W03
15JUN
CPH
CAF802 AF810 26OCT27MAR 1234567 290AB3 FCONCE0910 1030LHRMAN JJ
RAF802 AF810 26OCT27MAR 1234567 290AB3 FCONCE0850 1010LHRMAN JJ

SCR
/CPH1806
W03
18JUN
CPH
REYT/AF1506
HAF802 AF810 26OCT27MAR 1234567 290AB3 FCONCE0910 1030LHRMAN JJ
UAF802 AF810 26OCT27MAR 1234567 290AB3 FCONCE0850 1010LHRMAN JJ
OAF802 AF810 26OCT27MAR 1234567 290AB3 FCONCE0900 1020LHRMAN JJ

SCR
/AF2006
W03
20JUN
CPH
REYT/CPH1806
PAF802 AF810 26OCT27MAR 1234567 290AB3 FCONCE0900 1020LHRMAN JJ
```

Decline Offer

The airline will decline offers by responding to the coordinator with an SCR message using Action Code **Z**.

The use of Action Code **Z** by the airline indicates that none of the offer(s) are acceptable.

Action Code **Z** must be used against all data lines with Action Code **O** when no offer has been accepted with Action Code **A**.

If the original request included changes to non-capacity items, these changes will not be actioned by the coordinator if the airline declines the offer.

For the **C/R, M/R, C/I** and **M/I** procedures, the existing clearance will be maintained.

The airline may opt to continue the **C/R, M/R, C/I** or **M/I** procedure with a new slot allocation request with different timings.

Example

```
SCR
/AF1506
W03
15JUN
CPH
CAF802 AF810 26OCT27MAR 1234567 290AB3 FCONCE0910 1030LHRMAN JJ
RAF802 AF810 26OCT27MAR 1234567 290AB3 FCONCE0850 1010LHRMAN JJ
```

```
SCR
/CPH1806
W03
18JUN
CPH
REYT/AF1506
HAF802 AF810 26OCT27MAR 1234567 290AB3 FCONCE0910 1030LHRMAN JJ
UAF802 AF810 26OCT27MAR 1234567 290AB3 FCONCE0850 1010LHRMAN JJ
OAF802 AF810 26OCT27MAR 1234567 290AB3 FCONCE0840 1000LHRMAN JJ
```

```
SCR
/AF2006
W03
20JUN
CPH
REYT/CPH1806
ZAF802 AF810 26OCT27MAR 1234567 290AB3 FCONCE0840 1000LHRMAN JJ
```

6.8.8 Coordinator Response During or After SC

The following table summarizes the possible coordinator responses to the airline acceptance/ declining of an offer or not replying.

COORDINATOR RESPONSE to AIRLINE ACCEPTANCE, DECLINE or NO RESPONSE to an OFFER	**ACTION CODE(S)**
Modify Existing Clearances (**C/R, M/R, C/I, M/I** procedures)	
• Acceptance (**A**)	**X/K**
• Acceptance with Improvement (**P**)	**X/K**
• Decline	**H/X**
• No Response	**H/X**
New/New Entrant	
• Acceptance (**A**)	**K**
• Acceptance with Improvement (**P**)	**K**
• Decline	**U/X**
• No Response	**U/X**

6.8.8.1 Modify Existing Clearances (C/R, M/R, C/I, M/I procedures)

The coordinator will confirm the clearance accepted by the airline (Action Code **A**) or will maintain the clearance for improvement in its Waitlist (Action Code **P**) using Action Code **K** and the cancellation of the existing clearance using Action Code **X**.

All other offers for the same slot allocation request will be cancelled.

Example

```
SCR
/AF1506
W03
15JUN
CPH
CAF802 AF810 26OCT27MAR 1234567 290AB3 FCONCE0910 1030LHRMAN JJ
RAF802 AF810 26OCT27MAR 1234567 290AB3 FCONCE0850 1010LHRMAN JJ

SCR
/CPH1806
W03
18JUN
CPH
REYT/AF1506
HAF802 AF810 26OCT27MAR 1234567 290AB3 FCONCE0910 1030LHRMAN JJ
UAF802 AF810 26OCT27MAR 1234567 290AB3 FCONCE0850 1010LHRMAN JJ
OAF802 AF810 26OCT27MAR 1234567 290AB3 FCONCE0900 1020LHRMAN JJ

SCR
/AF2006
W03
20JUN
CPH
REYT/CPH1806
AAF802 AF810 26OCT27MAR 1234567 290AB3 FCONCE0900 1020LHRMAN JJ

SCR
/CPHAF2206
W03
23JUN
CPH
REYT/AF2006
XAF802 AF810 26OCT27MAR 1234567 290AB3 FCONCE0910 1030LHRMAN JJ
KAF802 AF810 26OCT27MAR 1234567 290AB3 FCONCE0900 1020LHRMAN JJ
```

When an offer has been declined (Action Code **Z**), the coordinator will continue to maintain the Waitlist using Action Code **H** and will cancel the offer using Action Code **X**.

Example

```
SCR
/AF1506
W03
15JUN
CPH
CAF802 AF810 26OCT27MAR 1234567 290AB3 FCONCE0910 1030LHRMAN JJ
RAF802 AF810 26OCT27MAR 1234567 290AB3 FCONCE0850 1010LHRMAN JJ
```

```
SCR
/CPH1806
W03
18JUN
CPH
REYT/AF1506
HAF802 AF810 26OCT27MAR 1234567 290AB3 FCONCE0910 1030LHRMAN JJ
UAF802 AF810 26OCT27MAR 1234567 290AB3 FCONCE0850 1010LHRMAN JJ
OAF802 AF810 26OCT27MAR 1234567 290AB3 FCONCE0840 1000LHRMAN JJ
```

```
SCR
/AF2006
W03
20JUN
CPH
REYT/CPH1806
ZAF802 AF810 26OCT27MAR 1234567 290AB3 FCONCE0840 1000LHRMAN JJ
```

```
SCR
/CPHAF2206
W03
23JUN
CPH
REYT/AF2006
HAF802 AF810 26OCT27MAR 1234567 290AB3 FCONCE0910 1030LHRMAN JJ
/ CA.GA CD.GA RA.0850 RD.1010/
XAF802 AF810 26OCT27MAR 1234567 290AB3 FCONCE0840 1000LHRMAN JJ
```

If the airline did not respond to the offer within 3 business days, the coordinator will advise the offers are no longer valid and that the existing clearance has been maintained.

Action Code **H** is used to confirm the existing clearance and Action Code **X** is used to confirm the cancellation of the offers.

The coordinator will use the SI line to advise that a response was not received within the specified time-frame.

```
SCR
/CPH1806
W03
18JUN
CPH
REYT/AF1506
HAF802 AF810 26OCT27MAR 1234567 290AB3 FCONCE0910 1030LHRMAN JJ
UAF802 AF810 26OCT27MAR 1234567 290AB3 FCONCE0850 1010LHRMAN JJ
OAF802 AF810 26OCT27MAR 1234567 290AB3 FCONCE0840 1000LHRMAN JJ
```

```
SCR
/CPH2206
W03
23JUN
CPH
REYT/CPH1806
HAF802 AF810 26OCT27MAR 1234567 290AB3 FCONCE0910 1030LHRMAN JJ
XAF802 AF810 26OCT27MAR 1234567 290AB3 FCONCE0840 1000LHRMAN JJ
SI DEADLINE TO RESPOND WAS 21 JUN
```

6.8.8.2 New/New Entrant

The coordinator will confirm the clearance accepted by the airline (Action Code **A**) or will maintain the clearance for improvement in its Waitlist (Action Code **P**) using Action Code **K**.

All other offers for the same slot allocation request will be cancelled.

Example

```
SCR
/AC1506
W03
15JUN
LHR
NAC824 AC825 27OCT29MAR 1234567 292333 YUL1030 1725YUL JJ
```

```
SCR
/LHR1806
W03
18JUN
LHR
REYT/AC1506
UAC824 AC825 27OCT29MAR 1234567 292333 YUL1030 1725YUL JJ
OAC824 AC825 27OCT29MAR 1234567 292333 YUL1015 1700YUL JJ
```

```
SCR
/AC2006
W03
20JUN
LHR
REYT/LHR1806
PAC824 AC825 27OCT29MAR 1234567 292333 YUL1015 1700YUL JJ
```

```
SCR
/LHR2206
W03
23JUN
LHR
REYT/AC2006
KAC824 AC825 27OCT29MAR 1234567 292333 YUL1015 1700YUL JJ
```

If the airline does not respond to an offer message within 3 business days, the coordinator will advise that the offers are no longer valid (Action Code **U** and **X**). The coordinator will use the SI line to notify the airline that a response was not received in the designated time frame. Further discussion between the airline and the coordinator should use the WCR procedures outlined in 6.12.3

Example

```
SCR
/LHR1806
W03
18JUN
LHR
REYT/AC1506
UAC824 AC825 27OCT29MAR 1234567 292333 YUL1030 1725YUL JJ
OAC824 AC825 27OCT29MAR 1234567 292333 YUL1015 1700YUL JJ
```

```
SCR
/LHR1806
W03
23JUN
LHR
REYT/AC1506
UAC824 AC825 27OCT29MAR 1234567 292333 YUL1030 1725YUL JJ
/ CA.GA CD.GA/
XAC824 AC825 27OCT29MAR 1234567 292333 YUL1015 1700YUL JJ
SI DEADLINE TO RESPOND WAS 21JUN
```

6.8.9 Acknowledgement of the Airline Filing by the Coordinator

Coordinators should acknowledge the receipt of the original slot allocation requests from an airline using the special SCR ACK message.

The ACK message will contain the complete information data lines from the original request with Action Code **P** replacing Action Codes **B, F, I, L, N, R, V** or **Y**.

The Creator Reference Line will begin with a '/', followed by ACK and then the coordinator reference.

The Incoming Message Reference should repeat the creator reference and/or the time (stamp) from the original message.

If unable to provide a detailed ACK message, the coordinator should acknowledge receipt of the slot allocation requests using a SI line to confirm that the number of information lines received. All data lines should be counted including any applicable C data lines.

Examples

SCR filing by the airline at 191105

```
SCR
/AYBRU001
S03
19SEP
BRU
FAY821 AY822 30MAR25OCT 1234567 141M82 HEL0630 0740HEL JJ
CAY823 AY824 30MAR25OCT 1234567 141M82 HEL1630 1740HEL JJ
LAY823 AY824 30MAR25OCT 1234567 141M82 HEL1640 1750HEL JJ
```

ACK message response from the coordinator

```
SCR
/ACK/S03AY001
S03
19SEP
BRU
REYT/AYBRU001/191105
PAY821 AY822 30MAR25OCT 1234567 141M82 HEL0630 0740HEL JJ
PAY823 AY824 30MAR25OCT 1234567 141M82 HEL1640 1750HEL JJ
```

or

```
SCR
/ACK/S03AY001
S03
20SEP
BRU
REYT/AYBRU001/191105
SI 3 DATA LINES RECEIVED
```

6.8.10 Action Code T—Conditions met/not met Coordinators Responses

When a coordinator has allocated a slot with conditions using Action Code **T** the airline will have a time frame to meet these conditions. If the conditions are met the coordinator will confirm the slot using Action Code **K**. If the airline is unable to meet the conditions within the given time frame, and following a discussion between parties, the coordinator may use Action Code **X** to cancel the slot allocation.

6.9 Use of Special Reference—//BLOCK or //SWAP

When the Special Reference facility //XX is used for //BLOCK or //SWAP in the SCR message, the coordinator should action either all the requested changes or action none of them.

This implies that the handling of the complete message by the Coordinator will be manual rather than automated.

//BLOCK—C/L, M/L, C/R or M/R Procedure to Exchange Arrival and Departure Clearances

An airport may provide the facility for airlines to exchange arrival and departure clearances.

The request to exchange arrival and departure clearances will be submitted by the airline to the coordinator in a SCR message using the Special Reference '`//BLOCK`' to ensure that all the transactions are processed as a whole.

If the whole transaction cannot be processed, the historic must be maintained.

The airline submits the request to the coordinator using Action Code **C** or **M** to identify the existing clearances to be exchanged and using Action Code **L** or **R** to identify the requested slot allocations.

If the coordinator can clear the exchange as requested, this will be confirmed to the airlines in a SCR message using Action **X** to indicate that existing clearance (**C** or **M** data line) has been deleted and using Action Code **K** to indicate the revised clearance (**L** or **R** data line).

Examples

Airline Request to Exchange an Arrival to a Departure Clearance

```
SCR
//BLOCK/AN15OCT
W03
15OCT
SYD
CAN123 26OCT27MAR 1234567 211762 MEL0100 J
R AN124 26OCT27MAR 1234567 123733 0100ADL J
```

```
SCR
/SYD18OCT
W03
18OCT
SYD
REYT/15OCT
XAN123 26OCT27MAR 1234567 211762 MEL0100 J
K AN124 26OCT27MAR 1234567 123733 0100ADL J
```

Airline Request to Exchange of Transit/turnaround Clearances

```
SCR
//BLOCK/AN15OCT
W03
15OCT
SYD
CAN123 AN124 26OCT27MAR 1234567 211762 MEL0100 0145BNE JJ
CAN125 AN126 26OCT27MAR 1234567 123733 OOL0015 0125ADL JJ
RAN125 AN224 26OCT27MAR 1234567 211762 OOL0015 0100ADL JJ
RAN223 AN124 26OCT27MAR 1234567 123733 BNE0125 0145BNE JJ
```

```
SCR
/SYD18OCT
W03
18OCT
SYD
REYT/AN15OCT
XAN123 AN124 26OCT27MAR 1234567 211762 MEL0100 0145BNE JJ
XAN125 AN126 26OCT27MAR 1234567 123733 OOL0015 0125ADL JJ
KAN125 AN224 26OCT27MAR 1234567 211762 OOL0015 0100ADL JJ
KAN223 AN124 26OCT27MAR 1234567 123733 BNE0125 0145BNE JJ
```

//BLOCK—D/N with C/L, M/l, C/R or M/R Procedures

When an airline submits an inter-dependent set of requests to exchange slots and to request new slot allocations and/or delete existing clearances, '//BLOCK' is used to indicate that the requests are to be processed as a total transaction.

If the coordinator cannot confirm one or more of the requests, status quo is maintained.

The airline submits the request to the coordinator using Action Code **C** or **M** to identify the existing clearances to be exchanged and using Action Code **L** or **R** to identify the requested slot allocations after the exchange.

Action Code N is used to request new slot allocations and Action Code **D** is used to delete existing clearances.

If the Coordinator cannot confirm all the requested changes, the D and N requests will not be actioned and the existing clearances (C data line) will be maintained.

```
SCR
//BLOCK
W03
15OCT
FRA
DAY823 AY824 27OCT29MAR 1234567 141M82 ARNHEL0650 0755ARNHEL JJ
CAY821 AY822 27OCT29MAR 1234567 141M82 HEL0630 0740HEL JJ
LAY821 AY822 27OCT29MAR 1234567 141M82 HEL0650 0755HEL JJ
CAY825 AY826 27OCT29MAR 1234567 141M82 TKUAMS1120 1210AMSTKU JJ
LAY825 AY826 27OCT29MAR 1234567 209757 TKUARN0630 0740ARNTKU JJ
NAY827 AY828 27OCT29MAR 1234567 209754 TKUHEL1120 1210HELTKU JJ
```

//SWAP—C/L or M/L Procedure to Exchange Clearances

When two or more carriers wish to exchange existing clearances, the SCR **C/L** or **M/L** procedure will be used with the special message header reference '//SWAP'.

The request to exchange existing clearances will be submitted by each airline to the coordinator in a SCR message using Action Code **C** or **M** to identify the existing clearances and using Action Code **L** to identify the requested allocations after the exchange.

The coordinator will acknowledge the receipt of each request in a SCR message using Action **P** to indicate that the exchange is pending until the requests have been received from all the airlines involved.

If the coordinator can clear the exchange as requested, this will be confirmed to the airlines in a SCR message using Action **X** to indicate that existing clearance (**C** or **M** data line) has been deleted and using Action Code K to indicate the revised clearance (**L** data line).

If the coordinator cannot clear the requested exchange, the existing clearances (**C** or **M** data line) will be maintained.

Example

Airline Request to Exchange Existing Clearances

```
SCR
//SWAP/KL15OCT
W03
15OCT
FRA
CAY821 AY822 26OCT27MAR 1234567 141M82 HEL0630 0740HEL JJ
CKL825 KL826 26OCT27MAR 1234567 113733 AMS0650 0755AMS JJ
LAY821 AY822 26OCT27MAR 1234567 141M82 HEL0650 0755HEL JJ
LKL825 KL826 26OCT27MAR 1234567 113733 AMS0630 0740AMS JJ
```

Reply by the coordinator prior to receiving SCR from all requesting airlines

```
SCR
/FRA17OCT
W03
15OCT
FRA
REYT/KL15OCT
PAY821 AY822 26OCT27MAR 1234567 141M82 HEL0630 0740HEL JJ
PKL825 KL826 26OCT27MAR 1234567 113733 AMS0650 0755AMS JJ
PAY821 AY822 26OCT27MAR 1234567 141M82 HEL0650 0755HEL JJ
PKL825 KL826 26OCT27MAR 1234567 113733 AMS0630 0740AMS JJ
SI PENDING SUBJECT TO RECEIVING MESSAGES FROM ALL AIRLINES CONCERNED
```

Response by the coordinator after receiving messages from all airlines involved

```
SCR
/FRA19OCT
S98
19OCT
FRA
REYT/AY16OCT
XAY821 AY822 26OCT27MAR 1234567 141M82 HEL0630 0740HEL JJ
XKL825 KL826 26OCT27MAR 1234567 113733 AMS0650 0755AMS JJ
KAY821 AY822 26OCT27MAR 1234567 141M82 HEL0650 0755HEL JJ
KKL825 KL826 26OCT27MAR 1234567 113733 AMS0630 0740AMS JJ
```

6.10 SMA Procedures

The SMA procedures defined in this Section are applicable at Level 2 airports and are undertaken by airlines and facilitators.

These procedures comprise:

- the SAL procedure for the exchange of planned operation information before the SC;
- the SMA procedure to optimize planned operations within the available airport capacity;
- This procedure may occur throughout the whole scheduling process.

The SMA procedure is used by airlines to submit data on planned operations to facilitators at Level 2 airports, or data collection agents at Level 1 airports.

Although these airports are not Level 3, information is required to manage the airport capacity in order to avoid the airport having to consider moving to Level 3 status.

Airlines operating, or intending to operate, to a Level 2 airport must submit their planned operations to the facilitators within the time-frames defined in the WSG.

The standard SMA message is used to exchange data on planned operations.

A diagram of the message exchange flows between airlines and facilitators with relevant action codes is presented below.

Note: *For the purpose of assisting with future airport planning at Level 1 airports, the SMA message may be used to provide data to a Level 1 airport operator after the SC using the Action Code **H** only.*

Additionally, the Standard Message Identifier 'SCR', with explicit prior agreement between the airline and the facilitator, may be used at Level 2 airports along with the appropriate Level 2 actions.

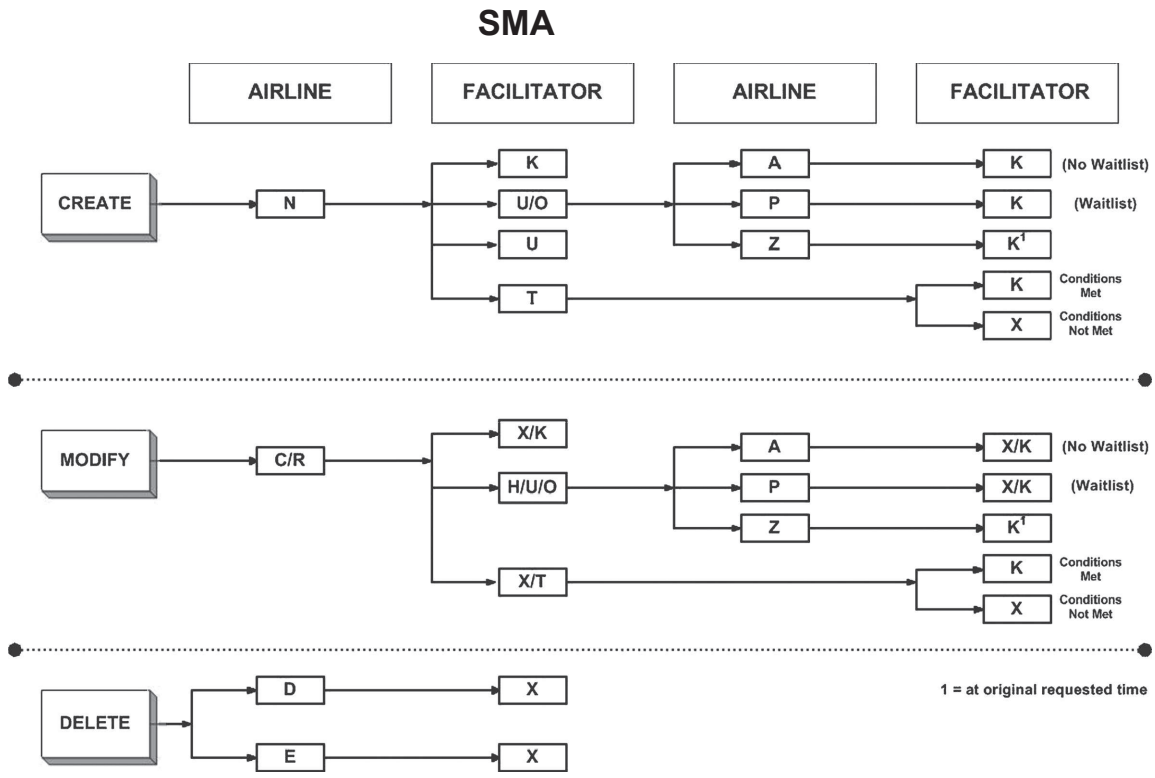

6.10.1 SMA—Airline Filing Procedures

An airline will use the following filing procedures with the appropriate Action Codes or combination of Action Codes in an SMA message.

FILING PROCEDURE	ACTION CODE(S)
Modify Existing Planned Operations	
• Offers acceptable	**C** and **R**
New Request	**N**
Delete	**D**
Eliminate	**E**

When filing changes or new requests with the above Action Codes, airlines may use the Timing Flexibility Identifier and/or Supplementary Information (SI) lines to indicate the range of timings for acceptable offers.

It is recommended that airlines file separate messages when using the SI line or Timing Flexibility Identifier.

6.10.1.1 New Requests

An airline uses Action Code **N** in a SMA message to request a new planned operation.

The airline may indicate a range of acceptable timings using either the Timing Flexibility Identifier or the SI (Supplementary Information) line.

Example

```
SMA
/BD1406
W03
14JUN
EDI
NBD66 BD67 26OCT27MAR 0000567 190321 LHR1930 2150LHR JJ
```

6.10.1.2 C/R Procedure—Change Requests

An airline uses the **C/R** procedure to request changes to existing planned operations.

For each planned operation to be changed, the airline submits a SMA message with:

- a data line with Action Code **C** to identify the existing planned operation;
- one or more data lines with Action Code **R** to indicate the revised request.

The airline may indicate a range of acceptable timings using either the Timing Flexibility Identifier or the SI (Supplementary Information) line.

Example

```
SMA
/EI1506
W03
16JUN
EDI
CEI265 EI272 26OCT27MAR 1234567 077146 BHX1245 1310BHX JJ
REI265 EI272 26OCT27MAR 1234567 077146 BHX1255 1330BHX JJ
```

6.10.1.3 Delete or Eliminate

An airline uses the **D** procedure to delete an existing planned operation or the **E** procedure to permanently delete (eliminate) all planned operations.

→ *Refer to New Requests and/or New Entrants Procedures in the Initial Coordinator Procedures above for details*.

6.10.2 Facilitator Response to Airline SMA Request

The facilitator uses the following filing procedures with the appropriate Action Codes or combination of Action Codes in a SMA Message.

FACILITATOR RESPONSE to AIRLINE REQUEST	ACTION CODE(S)
Modify Existing planned operations	
• Offers acceptable (**C/R**)	**H/U/O, W, X/K, X/T**
New request (**N**)	**K, U, U/O, W, T**
Delete (**D**)	**X**
Eliminate (**E**)	**X**

6.10.2.1 Response to C/R Procedure—Offer Acceptable

Confirmation

When the facilitator confirms the planned operation as requested, this will be advised to the airline by a SMA message using Action Codes **X** and **K**.

The existing planned operation will be replaced by the revised planned operation. The information in the **R** data line replaces the information in the **C** data line.

The cancellation of the existing planned operation is confirmed to the airline using Action Code **X**. The new planned operation is confirmed using Action Code **K**.

Example

```
SMA
/EI1506
W03
15JUN
EDI
CEI265 EI272 26OCT27MAR 1234567 077146 BHX1245 1310BHX JJ
REI265 EI272 26OCT27MAR 1234567 077146 BHX1255 1330BHX JJ

SMA
/EDI1706
W03
17JUN
EDI
REYT/EI1506
XEI265 EI272 26OCT27MAR 1234567 077146 BHX1245 1310BHX JJ
KEI265 EI272 26OCT27MAR 1234567 077146 BHX1255 1330BHX JJ
```

Holding—Voluntary Adjustment Offer

When, the facilitator **cannot** confirm the requested planned operation but can offer, to the airline, an alternative movement time, the existing planned operations will be maintained until the offer is accepted or refused by the airline.

The airline will be advised of the offer using a combination of Action Codes **H, U** and **O**.

The airline should endeavor to accept the alternative movement times offered in order to reduce operational delays and avoid the possibility of the airport changing to Level 3.

→ Refer to Modify Existing Clearances Procedures—Coordinator Responses above for details and examples.

The planned operation request will automatically be placed in the facilitator's Waitlist for improvement.

Unable—Not confirmed

When the facilitator **cannot** confirm the new planned operation as requested, the airline will be advised by a SMA message using Action Code **U**.

The reason why the request cannot be confirmed may be due to factors such as an inadequate runway length for the type of aircraft operating the schedule.

The requested planned operation is placed in the facilitator's Waitlist for improvement.

Example

```
SMA
/EDI1606
W03
14JUN
EDI
REYT/BD1406
UBD166 BD167 26OCT27MAR 0000567 190321 LHR1930 2150LHR JJ
```

Allocated subject to conditions

When the facilitator can confirm the new planned operation as requested but subject to conditions, the airline will be advised by a SMA message is using Action Codes **X** and **T** and the SI Text will be used to advise the conditions.

Example

```
SMA
/ORKI966
W03
14JUN
ORK
CBD966 BD967 31OCT26MAR 0000500 148733 CVT1930 2150CVT CC
RBD966 BD967 31OCT26MAR 0000500 235752 CVT1930 2150CVT CC
```

```
SMA
/
W03
14JUN
ORK
REYT/ORK966
XBD966 BD967 31OCT26MAR 0000500 148733 CVT1930 2150CVT CC
TBD966 BD967 31OCT26MAR 0000500 235752 CVT1930 2150CVT CC
SI SUBJECT TO COMPLETION OF NEW STAND AS DISCUSSED
```

Once the conditions have been met the planned operation will be confirmed by a SMA message using Action Code **K**. Should the conditions not be met the facilitator will confirm the deletion of the planned operation using Action Code **X** following discussion with the airline.

6.10.2.2 Response to New Requests

Confirm

When the facilitator can confirm the new planned operation as requested, this will be advised to the airline by a SMA message using Action Code **K**.

Example

```
SMA
/BD1406
W03
14JUN
EDI
NBD066 BD067 26OCT27MAR 0000567 190321 LHR1930 2150LHR JJ

SMA
/EDI1606
W03
14JUN
EDI
REYT/BD1406
KBD066 BD067 26OCT27MAR 0000567 190321 LHR1930 2150LHR JJ
```

Unable—Voluntary Adjustment Offer

To avoid congestion at a Level 2 airport the facilitator may offer to the airline the nearest available alternative movement times from those requested by the airline. The airline should endeavour to accept the alternative movement times offered in order to reduce operational delays and avoid the possibility of the airport to changing to Level 3.

The (voluntary) adjusted movement will be confirmed to the airline using Action Codes **U** and **O**.

→ *Refer to Coordinator Responses for New Schedule/New Entrant Procedures above for details and examples*.

The original planned operation request will automatically be recorded on the facilitator's Waitlist for improvement.

Allocated subject to conditions

When the facilitator can confirm the new schedules movement as requested but subject to conditions, the airline will be advised by a SMA message Action Code **T** and the SI Text will be used to advise the conditions.

Example

```
SMA
/ORK966
W03
14JUN
ORK
NBD966 BD967 31OCT26MAR 0000500 235752 CVT1930 2150CVT CC
```

```
SMA
/
W03
14JUN
ORK
REYT/ORK966
TBD966 BD967 31OCT26MAR 0000500 235752 CVT1930 2150CVT CC
SI SUBJECT TO COMPLETION OF NEW STAND AS DISCUSSED
```

or

```
SMA
/
W03
14JUN
ORK
REYT/ORK966
TBD966 BD967 31OCT26MAR 0000500 235752 CVT1930 2150CVT CC
/ SA.STAND SD.STAND/
```

Once the conditions have been met the airline will be confirmed by a SMA using Action Code **K**. Should the conditions not be met the facilitator will confirm the deletion of the schedules movement using Action Code **X** following discussion with the airline.

6.10.2.3 Response to D and E Procedures

Confirmation

The facilitator will confirm the deletion or the elimination of planned operations using Action Code **X**.

6.10.3 Airline Response to Offers by Facilitator

The airline has the option to accept an offer (Action Code **A**), to decline an offer (Action Code **Z**) or to accept an offer but request improvement (Action Code **P**).

The following table summarizes the possible airline responses to the facilitator offers.

AIRLINE RESPONSE to FACILITATOR OFFER	ACTION CODE(S)
Modify Existing Planned operations	
• Offer (**H/U/O**) (**C/R** procedure)	**A, P, Z**
New Planned operation	
• Offer (**U/O**)	**A, P, Z**

6.10.3.1 Airline Response to an Offer

Acceptance

The airline will confirm its acceptance of the planned operation(s) being offered by responding to the facilitator with a SMA message using Action Code **A**.

The use of Action Code **A** by the airline indicates that it will not be seeking further improvement on the planned operation offered.

Acceptance with Improvement

The airline will provisionally confirm its acceptance of the planned operation(s) being offered by responding to the facilitator with a SMA message using Action Code **P**.

The use of Action Code **P** by the airline indicates that it will be seeking further improvement on the planned operation offered and expects the facilitator to maintain the original planned operation request for improvement.

Decline Offer

The airline will decline offers by responding to the facilitator with an SMA message using Action Code **Z**.

The use of Action Code **Z** by the airline indicates that the offers are not acceptable.

Action Code **Z** must be used against all data lines with Action Code **O** when no offer has been accepted with Action Code **A**.

When the airline cannot accept an offer from the facilitator requested through the **C/R** procedure, the airline will operate at the time(s) as requested in the R data line.

→ *Refer to Modify Existing Clearances Procedures—Coordinator Responses above for details and examples replacing SCR with SMA as the message type*.

6.10.4 Facilitator Response

The following table summarizes the possible facilitator responses to the airline acceptance of an offer.

FACILITATOR RESPONSE to AIRLINE ACCEPTANCE	ACTION CODE(S)
Modify Existing Planned operations (**C/R** procedure)	
• Acceptance (**A**) and Acceptance with Improvement (**P**)	**X/K**
• Decline (**Z**)	**K**
New Planned operation	
• Acceptance (**A**)	**K**
• Acceptance with Improvement (**P**)	**K**
• Decline (**Z**)	**K**

Response to an Offer on a C/R Change Request

The facilitator will confirm the clearance accepted by the airline (Action Code **A**) or will maintain the clearance for improvement in its Waitlist (Action code **P**) using Action code **K** and the cancellation of the existing planned operation clearance using Action Code **X**.

All other offers for the same planned operation request will be cancelled.

→ *Refer to Modify Existing Clearances Procedures—Coordinator Responses above for details and examples*.

Response to an Offer on a New Request

The facilitator will confirm the clearance accepted by the airline (Action Code **A**) or will maintain the clearance for improvement in its Waitlist (Action Code **P**) using Action Code **K**.

All other offers for the same planned operation request will be cancelled.

→ *Refer to Modify Existing Clearances Procedures—Coordinator Responses above for details and examples*.

6.10.5 SAL Procedures

The standard SAL procedures are for use by facilitators before the SC to inform airlines operating at Level 2 airports that:

- their planned operation submissions have been recorded in the facilitator database;
- they have been requested to consider a voluntary schedule change;
- their planned operation requests cannot be confirmed.

When the facilitator cannot confirm a planned operation request or requests a voluntary change to the planned operation, the reason why this action is being undertaken must be explained using the Coordinator Reason Codes listed in Appendix J.

If there is no acceptable codes or if the coordinator uses Reason Code 'UA', the reason why the request could not be granted should be provided in a SI line.

The SI line should also be used to provide further information as necessary.

The facilitators use the SAL message to provide each airline with the status of their planned operation requests.

The following table summarizes the actions that may be undertaken by the facilitators.

FACILITATOR RESPONSE to AIRLINE	ACTION CODE(S)
Confirmation	**K**
Offer Voluntary schedule adjustment	**O**
Not Confirmed	**U**

Confirm

When the facilitator can confirm the schedule as requested, this will be advised to the airline using Action Code **K**.

This also indicates that the schedule data has been recorded in the facilitator database.

Offer—Voluntary adjustment

When the facilitator has requested the airline to consider changing its original planned operation request, the adjusted offer is confirmed to the airline using Action Code **O**.

If, prior to or during SC, the airline accepts the revised planned operation, this will be recorded in the facilitator database.

If the airlines cannot accept the revised planned operation, or does not respond or does not contact the facilitator, then the facilitator should record the original planned operation in its database and contact the airline.

Once contacted by the facilitator, the airline must accept or decline the adjusted offer.

If the Operator then agrees to the revised planned operation, the original planned operation will be held by the facilitator in order that the offer might be improved at a later date. The airline has the option to advise the facilitator that it will not be seeking any improvement.

Not Confirmed

When a facilitator cannot confirm the planned operation and does not record the planned operation in the database, the airline will be advised using Action Code **U** together with the reason why the request could not be confirmed.

Exceptions

When using Action Codes **O** and **U**, the facilitator should advise arrival and departure planned operations on different lines unless both the arrival and departure have the same Action Code.

Example

The fictitious example below reflects pre-SC SAL for Airline ZZ at BRE:

```
SAL
/AIRLINE ZZ
W03
04JUN
BRE
KZZ123 ZZ124 29OCT24MAR 0030567 154734 TKU1200 1300TKU JJ
KZZ500 29OCT24MAR 1234567 180752 LHR1055 J
O ZZ501 29OCT24MAR 1234567 180752 1155LHR J / CD.TA/
OZZ257 ZZ257 30OCT28DEC 1204000 00073X DUSCGN2100 2155VIEKLU FF
/ CA.RA CD.CF/
K ZZ258 03JAN21MAR 0030000 00073X 2355DUSCGN F
KZZ2986 ZZ2987 29OCT24MAR 0230000 35674C SINBKK1400 1500BKKSIN QQ
```

6.11 SIR and SAQ Procedures

The SIR procedures defined in this Section are applicable at Level 3 and/or Level 2 airports and are undertaken by airlines, coordinators and facilitators at a specified airport.

These procedures comprise:

- The SAQ procedure allows an airline to investigate the possibility of amending existing clearances or adding new services without any definitive action being taken by the coordinator.
- This procedure may be used for the current season or the next Level 3 season and may only be used at Level 3 airports.
- The SIR procedure allows an airline to request and receive the status of its clearances at the specified airport.

The SIR procedure also allows an airline to request and receive the status on clearances or planned operations held by one or more airlines at the specified airport.

- These procedures comprise:
- The SIR procedure may only be used **after** the relevant SC and may be used at both Level 3 and Level 2 airports.
- The SIR procedure is **not** to be used by airlines during the period between the issuance of the SHLs and the start of a SC.
- The SIR procedure may also be used by a coordinator or facilitator to advise an airline—on an unsolicited basis and at any time during or after the SC—the status of its clearances held at the specified airport.

Requests for information using the SAQ procedures will not be processed unless the airline designator in the Schedule Information data line is:

- either identical to the airline designator in the originator's Type B address;
- or corresponds to additional authorized teletype address or the ‘generic’ email address as listed in SSIM Attachment 2 for the requesting airline.

Requests for information using the SIR procedures will not be processed unless the airline designator in the Information Data line to an authorized teletype address or the 'generic' email address as listed in SSIM Attachment 2.

Responses to SIR must only be transmitted to the originator of the request as specified in the Type B/email address in the Creator Reference.

Unsolicited SIRs originating from a coordinator or facilitator must only be transmitted to the authorized teletype address or the 'generic' email address of the airline holding the clearances or planned operations at the specified airport.

The SIR message format allows for all combinations of request for information for:

- all flights (arrival, departure or transit/turnout);
- all airlines or a specific airline;

  specific flight(s) for a specific airline;
- part of a Season;
- all days and/or times throughout the whole Season;
- specific the whole Season;
- days and/or times throughout the whole Season;
- specific days and/or times.

6.11.1 SAQ Procedure

Airline Request for Information on New Slot Allocation

The airline submits a SAQ message to a coordinator using Action Code **N** to request availability information for a new slot allocation.

The request may be for a whole Season, part of a Season, all days of the week or specific days of the week and all combinations of these.

Example

```
SAQ
/EW1604
S03
16APR
BRU
NEW881 EW882 05MAY27JUN 1234500 042AT3 NUE1730 1815NUE JJ
```

Airline Request for Information on Revised Clearance

The airline submits a SAQ message to a coordinator using a combination of Action Codes **C** and **R** to request availability information for a possible change to an existing clearance.

The **C** data line identifies the existing clearance and the **R** data line identifies the slot allocation request being considered.

Example

```
SAQ
/EW1704
S03
17APR
BRU
CEW881 EW882 05MAY27JUN 1234500 042AT3 NUE1055 1140NUE JJ
REW881 EW882 05MAY27JUN 1234500 042AT3 NUE1130 1215NUE JJ
```

Coordinator Response to Request for Availability Information

The coordinator will provide clearance availability information to the airline in a SAQ message using either Action Code **I or a combination of Action Codes H, U and I**.

The information provided by the coordinator is for information purposes only.

The coordinator may use the Coordinator Reason Codes listed in Appendix J to advice the airline of potential problems that could be encountered if a request to change an existing clearance is submitted.

Airlines must understand that there is **no** guarantee or obligation that the available clearance(s) advised in the SAQ message will be confirmed if and when the airline submits a formal request using the SCR procedures.

All possibilities as used in SCR requests using Action Codes **N** or **C/R** can be used for these requests for information.

When a clearance is available at the requested timings for a new slot allocation, the coordinator will advise the airline using Action Code **I**.

When a clearance is not available at the requested timings for a new slot allocation, the coordinator will advise the airline using Action Code **U**.

When a clearance is not available at the requested timings for a new slot but there is availability close to these requested timings, the coordinator will advise the airline using Action Code **U** to identify the requested timings and Action Code **I** on one or two data lines to indicate the potential available times.

When a clearance is available at the requested timings for a revised clearance, the coordinator will advise the airline using a combination of Action Codes **H** and **I**.

The existing clearance (**C** data line) is replaced by the **H** data line and the **R** data line is replaced by one or more **I** data lines.

When a revised clearance is not available at the requested timings but there is availability close to these requested timings, the coordinator will advise the airline using a combination of Action Codes **H, U** and **I** to indicate the potential availability:

- Action Code **H** is used to identify the existing clearance (**C** data line) and must precede **U** lines
- Action Code **U** is used to identify the requested revised clearance (**R** data line) and must precede any **I** lines
- Action Code **I** is used to identify the potential availability either before and/or after the requested timings.

If no reasonable clearance is available for a revised clearance, the coordinator will advise the airline using Action Codes **H** and **U** where the existing clearance (**C** data line) is replaced by the **H** data line and the **R** data line is replaced by the **U** data line.

Example—New Clearance Availability Request with Availability at Requested Timings

```
SAQ
/EW1604
S03
16APR
BRU
NEW881 EW882 05MAY27JUN 1234500 042AT3 NUE1730 1815NUE JJ
```

```
SAQ
/BRU1804
S03
18APR
BRU
REYT/EW1604
IEW881 EW882 05MAY27JUN 1234500 042AT3 NUE1730 1815NUE JJ
```

Example—New Clearance Availability Request with Reasonable Availability close to Requested Timings

```
SAQ
/EW1604
S03
16APR
BRU
NEW881 EW882 05MAY27JUN 1234500 042AT3 NUE1730 1815NUE JJ
```

```
SAQ
/BRU1804
S03
18APR
BRU
REYT/EW1604
UEW881 EW882 05MAY27JUN 1234500 042AT3 NUE1730 1815NUE JJ
IEW881 EW882 05MAY27JUN 1234500 042AT3 NUE1715 1800NUE JJ
IEW881 EW882 05MAY27JUN 1234500 042AT3 NUE1745 1830NUE JJ
```

Example—New Clearance Availability Request and no Reasonable Availability

```
SAQ
/EW1604
S03
16APR
BRU
NEW881 EW882 05MAY27JUN 1234500 042AT3 NUE1730 1815NUE JJ
```

```
SAQ
/BRU1804
S03
18APR
BRU
REYT/EW1604
UEW881 EW882 05MAY27JUN 1234500 042AT3 NUE1730 1815NUE JJ
```

Example—Revised Clearance Availability Request with Availability at Requested Timings

```
SAQ
/EW1704
S03
17APR
BRU
CEW881 EW882 05MAY27JUN 1234500 042AT3 NUE1055 1140NUE JJ
REW881 EW882 05MAY27JUN 1234500 042AT3 NUE1130 1215NUE JJ

SAQ
/BRU1704
S03
18APR
BRU
HEW881 EW882 05MAY27JUN 1234500 042AT3 NUE1055 1140NUE JJ
IEW881 EW882 05MAY27JUN 1234500 042AT3 NUE1130 1215NUE JJ
```

Example—Revised Clearance Availability Request with Reasonable Availability close to Requested Timings

```
SAQ
/EW1704
S03
17APR
BRU
CEW881 EW882 05MAY27JUN 1234500 042AT3 NUE1055 1140NUE JJ
REW881 EW882 05MAY27JUN 1234500 042AT3 NUE1130 1215NUE JJ

SAQ
/BRU1704
S03
18APR
BRU
HEW881 EW882 05MAY27JUN 1234500 042AT3 NUE1055 1140NUE JJ
UEW881 EW882 05MAY27JUN 1234500 042AT3 NUE1130 1215NUE JJ
IEW881 EW882 05MAY27JUN 1234500 042AT3 NUE1115 1245NUE JJ
IEW881 EW882 05MAY27JUN 1234500 042AT3 NUE1135 1220NUE JJ
```

Example—Revised Clearance Availability Request with No Reasonable Availability

```
SAQ
/EW1704
S03
17APR
BRU
CEW881 EW882 05MAY27JUN 1234500 042AT3 NUE1055 1140NUE JJ
REW881 EW882 05MAY27JUN 1234500 042AT3 NUE1130 1215NUE JJ
```

```
SAQ
/BRU1704
S03
18APR
BRU
HEW881 EW882 05MAY27JUN 1234500 042AT3 NUE1055 1140NUE JJ
UEW881 EW882 05MAY27JUN 1234500 042AT3 NUE1130 1215NUE JJ
```

Use by Coordinator in SIR Procedures

Action Code U is used by a coordinator in the SIR procedures to advise an airline that a clearance has not been allocated.

```
SIR
/LHR1806
W05
23SEP
LHR
UAC824 AC825 30OCT25MAR 1234567 292333 YUL0800 1245YUL JJ
/ CA.GA CD.GA/
```

6.11.2 SIR Procedure

Airline Request

The airline transmits a SIR message with Action Code **Q** to a coordinator at the specified Level 3 airport to:

- request the status of its clearances submitted by the SCR procedures;
- request the status of the clearances held by other airlines.

The airline transmits a SIR message with Action Code **Q** to a facilitator at the specified Level 2 airports to:

- request the status of its planned operations submitted by the SMA procedures;
- request the status of planned operations held by other airlines.

Requests for information for multiple airlines cannot be included in the same SIR message.

There must be one SIR message per airline.

When submitting requests for information at the larger airports, the airline must be very precise in specifying the information it requires.

Otherwise, it subjects those responding to the request to an unnecessary workload and the airline, in turn, may receive large volumes of information that it did not require.

Since the SIR procedures—and the examples below—are applicable to both Level 3 and Level 2 airport, airlines requesting information are cautioned to accurately specify the airport to ensure that relevant information is provided.

Examples

Request for clearance information throughout the Season for Transit/Turnaround Flights (airline own operation or other airline)

```
SIR
/OA12OCT
W03
12OCT
FRA
QOA OA
```

Request for clearance information throughout the Season for Arrival Flights (airline own operation or other airline)

```
SIR
/OA12OCT
W03
12OCT
FRA
QOA
```

Request for clearance information throughout the Season for Departure Flights (airline own operation or other airline)

```
SIR
/OA12OCT
W03
12OCT
FRA
Q OA
```

Request for clearance information for specific flight designators throughout the Season for Transit/Turnaround Flights and for Arrival and Departure Flights

```
SIR
/AF15OCT
W03
15OCT
SKG
QAF772 AF773
QAF1800
Q AF1805
```

Request for clearance information for a specific flight designator for a specific period for a departure flight

```
SIR
/AZ18OCT
W03
19OCT
FRA
Q AZ773 18DEC15JAN
```

Request for clearance information for more than one specific flight designator.

```
SIR
/BA15DEC
W03
15DEC
LHR
Q LH031
Q LH033 24DEC05JAN
```

Request for daily clearance information for the whole Season between 1700 and 1930 UTC for AY 823 (arrival) and AY824 (departure)

```
SIR
/AZ07SEP
W03
07SEP
FRA
QAY823 AY824 26OCT27MAR 1234567 1700 1930
```

Request for daily clearance information for the period 01MAR—26MAR between 1200 and 1600 UTC for all AY flights

```
SIR
/SK15FEB
W03
15FEB
ARN
QAY AY 01MAR26MAR 1234567 1200 1600
```

Request for clearance information throughout the Season for Transit/Turnaround Flights for all airlines

```
SIR
/OA12OCT
W03
12OCT
FRA
QQQQ QQQ
```

Request for planned operation information for the whole Season on Day 5 only between 1300 and 1445 UTC for all airlines (QQQ)

```
SIR
/AZ3008
W03
30AUG
LGW
QQQQ QQQ 26OCT27MAR 0000500 1300 1445
```

Request for all planned operation arrival information for the whole Season on Day 7 only between 1000 and 1345 UTC for CY

```
SIR
/BA18OCT
W03
18OCT
LCA
QCY 26OCT27MAR 0000007 1230 1450
```

Request for planned operation information for a specific flight designator for a specific period for Transit/Turnaround. Arrival and Departure Flights

```
SIR
/AZ18OCT
W03
19OCT
PSA
QAZ773 AZ774 18DEC15JAN
QAZ1800 03NOV15DEC
Q AZ1805 18NOV15FEB
```

Coordinator and Facilitator Response

For Level 3 airports, the coordinator responds to the airline with a SIR message using Action Codes **H, O, P, T** or **U**.

When an airline request is in the Waitlist for improvement, the coordinator or facilitator may chose to indicate the originally requested timings using the Requested Timings facility.

For Level 2 airports, the facilitator responds to the airline with an SIR message using Action Codes **H** only.

The facilitator will **not** provide information on offers or pending acceptances.

Coordinators and facilitators will always respond using the Schedule Information Line and may use the Additional Schedule Information line to provide supplementary information.

If necessary, alternative transmission methods may be used for large volumes of data.

Examples

Request for clearance information throughout the Season for Transit/Turnaround Flights (airline own operation or other airline)

```
SIR
/OA12OCT
W03
12OCT
FRA
QOA OA
```

```
SIR
/FRA15OCT
W03
15OCT
FRA
REYT/OA12OCT
HOA750 OA751 26OCT27MAR 1234567 135733 ATH0900 0955ATH JJ
OOA752 OA753 26OCT27MAR 1234567 111735 SKG0940 1030SKH JJ
/ RA.0950 RD.1040/
```

Request for clearance information for specific flight designators throughout the Season for Transit/Turnaround Flights

```
SIR
/AF15OCT
W03
15OCT
SKG
QAF772 AF773
```

```
SIR
/SKG17OCT
W03
17OCT
SKG
REYT/AF15OCT
HAF772 AF773 01NOV31JAN 1234567 111735 CDG0900 0955CDG JJ
```

Request for planned operation information for a specific flight designator for a specific period for a departure flight

```
SIR
/AZ18OCT
W03
19OCT
PSA
Q AZ773 18DEC15JAN
```

```
SIR
/PSA22OCT
W03
22OCT
PSA
REYT/AZ18OCT
P AZ773 18DEC15JAN 1234567 131M80 1220FCO J
```

Request for clearance information for more than one specific flight designator

```
SIR
/BA15DEC
W03
15DEC
LHR
Q LH031
Q LH033 24DEC05JAN
```

```
SIR
/LHR18DEC
W03
18DEC
LHR
REYT/BA15DEC
H LH031 26OCT27MAR 1234567 121733 1205FRA J
H LH033 24DEC05JAN 1234567 144320 1100HAM J
```

Request for planned operation information for the whole Season on Day 5 only between 1300 and 1345 UTC for all airlines (QQQ)

```
SIR
/AZ3008
W03
30AUG
LGW
QQQQ QQQ 26OCT27MAR 0000500 1300 1445
```

```
SIR
/LGW01SEP
W03
30AUG
LGW
REYT/AZ3008
HIB7578 IB7579 26OCT27MAR 0000500 165320 ALC1300 1355ALC JJ
TZZ1234 ZZ2345 26OCT27MAR 0000500 14573G CEQ1310 1355CEQ CC
/ SA.LICENCE SD.LICENCE/
HBA2725 BA2726 26OCT27MAR 0000500 14573G MUC1325 1410MUC JJ
HBA2959 BA2939 26OCT27MAR 0000500 142734 GLA1330 1410EDI JJ
HIB7556 IB7639 26OCT27MAR 0000500 290AB3 BIO1335 1420BCN JJ
/ RA.1250 RD.1335/
```

Request for daily clearance information for the period 01MAR—26MAR between 1200 and 1600 UTC for all AY flights

```
SIR
/SK15FEB
W03
15FEB
ARN
QAY AY 01MAR26MAR 1234567 1200 1600
```

```
SIR
/ARN17FEB
W03
09SEP
ARN
REYT/SK15FEB
HAY836 AY833 01MAR26MAR 1234567 171321 LHR1225 1305LHR JJ
HAY872 AY873 01MAR26MAR 1234567 171321 CDG1425 1525CDG JJ
HAY862 AY863 01MAR26MAR 1234567 171321 ZRH1435 1545ZRH JJ
```

Request for all planned operation arrival information for the whole Season on Day 7 only between 1600 and 1700 UTC for CY

```
SIR
/BA18OCT
W03
18OCT
LCA
QCY 26OCT27MAR 0000007 1600 1700
```

```
SIR
/BA18OCT
W03
18OCT
LCA
REYT/BA18OCT
HCY327 26OCT27MAR 0000007 292330 LHR1610 J
HCY317 26OCT27MAR 0000007 120319 FCO1630 J
HCY305 26OCT27MAR 0000007 292330 ATH1655 J
```

Request for clearance information for specific flight designators throughout the Season for Transit/Turnaround Flights, which currently do not have a clearance allocated.

```
SIR
/AF15OCT
W03
15OCT
SKG
QAF772 AF773
```

```
SIR
/SKG17OCT
W03
17OCT
SKG
REYT/AF15OCT
UAF772 AF773 01NOV31JAN 1234567 111735 CDG0900 0955CDG JJ
/ CA.AA CD.AA/
```

6.12 Waitlist Procedures

The Waitlist Procedures defined in this Section relate to the handling of Waitlist requests by airlines, coordinators and facilitators and may be used throughout the coordination process.

The Waitlist Procedures comprise:

- the SCR procedure;
- the WIR procedure;
- the WCR procedure.

Airlines must pay special attention between the use of the WCR and SCR procedures as both are applicable within this Section.

Airlines are cautioned that the use of the wrong procedure may result in a detrimental effect on the resulting schedules.

6.12.1 SCR Waitlist Procedure

To avoid confusion with the WCR procedures, the SCR Waitlist Procedures and relevant Actions Codes are summarized in the tables below.

6.12.1.1 Initial (SCR) Coordination Procedures

Initial (SCR) Coordination Procedures	**Waitlist and SAL Action Code(s)**
Maintain historic (**F**)	No Waitlist
Modify historic	
• Offers acceptable (**C/R, M/R**)	**H, O**
• Offers not acceptable (**C/L, M/L**)	**H**
• Continuation from previous adjacent Season—offers acceptable (**C/I, M/I**)	**H, O**
New Schedule (**N**)	**O** or **U**
New Schedule with New Entrant Status (**B**)	**O** or **U**
New Schedule with year round status – Continuation from previous adjacent Season (**Y**)	**O** or **U**
New Schedule with New Entrant Status with year round status – Continuation from previous adjacent Season (**V**)	**O** or **U**

New Request or C/L or M/L Procedures

When a coordinator is unable to clear these slot allocation request, this will be confirmed to the airline by a SAL message using Action Codes **H, O** or **U**.

The original slot allocation request (**B, I, N, V,** or **Y** data lines) will automatically be recorded in the coordinator or facilitators Waitlist for improvement.

C/R, M/R, C/I and M/I Procedures

When a coordinator is unable to clear the **C/R, M/R, C/I** or **M/I** slot allocation request, this will be confirmed to the airline by a SCR message using Action Codes **H** or **O**.

The original slot allocation request (**R** or **I** data line) will automatically be recorded on the coordinator or facilitators Waitlist for improvement.

Prior to or during SC, the airline must advise the coordinator or facilitator whether the outstanding request is to remain in, or be deleted from, the Waitlist.

The airline should submit his preference in an SCR message prior to the start of SC.

Action Code **P** is used to advise that the Waitlist is to be maintained and that further improvement is being sought.

Action Code **A** is used to advise that the offer is acceptable and that the original request can be deleted from the Waitlist.

If there was more than one offer for the same request and there has been no response from the airline, the coordinator will automatically confirm one of the offers and delete the others at the end of the SC.

The coordinator must confirm this action to the airline immediately after the close of SC.

If the airline cannot attend the SC and has not accepted any offers within the prescribed time-frame, the coordinator will cancel all offers.

If two offers have been given and one of them is acceptable, the airline advises the coordinator with a SCR using code **A** to indicate the offer being accepted.

If an improvement is still required, the airline sends an SCR using Action Code **P** against the offer being sought for improvement. The original request (**R** data line) remains in the coordinators Waitlist for improvement.

If the operator accepts the offer (**O/H**) with Action Code **A**, the coordinator or facilitator will remove the original request (**R** data line) from the Waitlist.

If no contact is made prior or during the SC, the coordinator will inform the operator that all the original slot allocation requests (**R** data lines) are in the coordinators Waitlist for improvement using a WIR message.

6.12.1.2 During or After the SC Procedures

During or After the SC	**Waitlist and SAL Action Code(s)**
Maintain historic (**F**)	No Waitlist
Modify historic	
• Offers acceptable (**C/R, M/R**)	**H/O** or **H/U**
• Offers not acceptable (**C/L, C/L**)	**H/U**
• Continuation from previous adjacent Season—offers acceptable (**C/I, M/I**)	**H/O** or **H/U**
New Schedule (**N**)	**O** or **U**
New Schedule with New Entrant Status (**B**)	**O** or **U**
New Schedule with year round status – Continuation from previous adjacent Season (**Y**)	**O** or **U**
New Schedule with New Entrant Status with year round status – Continuation from previous adjacent Season (**V**)	**O** or **U**

New Request Procedures

When a coordinator is unable to clear the slot allocation requests, this will be confirmed to the airline by a SCR message using Action Codes **O** or **U**.

The original slot allocation request (**B, N, V,** or **Y** data lines) will automatically be recorded in the coordinators Waitlist for improvement.

If the airline subsequently accepts the offer with an SCR message using Action Code **A**, the original slot allocation request (**B, N, V,** or **Y** data lines) will be deleted from the coordinators Waitlist.

C/L or M/L Procedures

When a coordinator is unable to clear the **C/L** or **M/L** slot allocation request, this will be confirmed to the airline by a SCR message using a combination of Action Codes **H** and **U**.

The original slot allocation request (**L** data line) will automatically be recorded in the coordinator's Waitlist for improvement.

When the **C/L** or **M/L** procedure is used and the requested timings equals the Waitlist timings held by the coordinator, the Waitlist data will not be changed.

When the **C/L** or **M/L** procedure is used and the requested timing (**L** data line) is not equal to the timing held by the coordinator (**C** or **M** data line) and when the request cannot be confirmed, the Waitlist timing will be adjusted to the new requested timing.

C/I, M/I, C/R and M/R Procedures

When a coordinator is unable to clear the **C/I, M/I, C/R** or **M/I** slot allocation request, this will be confirmed to the airline by a SCR message using a combination of Action Codes **H** and **O** or Action Codes **H** and **U**.

The original slot allocation request (**R** or **I** data line) will automatically be recorded in the coordinators Waitlist for improvement.

If the airline subsequently accepts the offer with an SCR message using Action Code **A**, the original slot allocation request (**R** or **I** data line) will be deleted from the coordinators Waitlist.

If the airline subsequently accepts the offer with an SCR message using Action Code **P**, or declines the offer using Action Code **Z**, the original request remains in the Waitlist for further improvement.

When the **C/I, M/I, C/R** or **M/R** procedure is used and the requested timings (**I** or **R** data line) equals the Waitlist timings held by the coordinator, the Waitlist will not be changed.

Examples

The Coordinator holds 0920 arrival and 1020 departure in their Waitlist. The airline requests an aircraft type change only:

```
SCR
/
W10
15JAN
ORY
CAF802 AF810 31OCT26MAR 1234567 290AB3 FCONCE0910 1030LHRMAN JJ
RAF802 AF810 31OCT26MAR 1234567 228752 FCONCE0920 1020LHRMAN JJ
```

```
SCR
/
W10
15JAN
ORY
XAF802 AF810 31OCT26MAR 1234567 290AB3 FCONCE0910 1030LHRMAN JJ
KAF802 AF810 31OCT26MAR 1234567 228752 FCONCE0910 1030LHRMAN JJ
/ CA.GA CD.GA RA.0920 RD.1020/
```

Should the coordinator be unable to accommodate the aircraft change the response will be:

```
SCR
/
W10
15JAN
ORY
HAF802 AF810 31OCT26MAR 1234567 290AB3 FCONCE0910 1030LHRMAN JJ
UAF802 AF810 31OCT26MAR 1234567 228752 FCONCE0920 1020LHRMAN JJ
/ CA.GA CD.GA RA.0920 RD.1020/
```

When the **C/I, M/I, C/R** or **M/R** procedure is used and the requested timing (**I** or **R** data line) is not equal to the timing held by the coordinator (**C** or **M** data line) or that held in the Waitlist and when the request cannot be confirmed, the Waitlist timing will be adjusted to the new requested timing.

Examples

The Coordinator holds 0920 arrival and 1020 departure in their Waitlist. The airline requests an aircraft type change and time change:

```
SCR
/
W10
15JAN
ORY
CAF802 AF810 31OCT26MAR 1234567 290AB3 FCONCE0910 1030LHRMAN JJ
RAF802 AF810 31OCT26MAR 1234567 228752 FCONCE0925 1025LHRMAN JJ
```

```
SCR
/
W10
15JAN
ORY
HAF802 AF810 31OCT26MAR 1234567 290AB3 FCONCE0910 1030LHRMAN JJ
UAF802 AF810 31OCT26MAR 1234567 228752 FCONCE0925 1025LHRMAN JJ
/ CA.GA CD.GA RA.0925 RD.1025/
```

The Coordinator holds 0920 arrival and 1020 departure in their Waitlist. The airline requests an aircraft type change and time change. Only the arrival time can be cleared at the requested time.

```
SCR
/
W10
15JAN
ORY
CAF802 AF810 31OCT26MAR 1234567 290AB3 FCONCE0910 1030LHRMAN JJ
RAF802 AF810 31OCT26MAR 1234567 228752 FCONCE0925 1025LHRMAN JJ
```

```
SCR
/
W10
15JAN
ORY
HAF802 AF810 31OCT26MAR 1234567 290AB3 FCONCE0910 1030LHRMAN JJ
UAF802 AF810 31OCT26MAR 1234567 228752 FCONCE0925 1025LHRMAN JJ
OAF802 AF810 31OCT26MAR 1234567 228752 FCONCE0925 1030LHRMAN JJ
/ CA.OK CD.GA RD.1025/
```

When the **C/I, M/I, C/R** or **M/R** procedure is used and the requested timing (**I** or **R** data line) is equal to the timing held by the coordinator (**C** or **M** data line) but different from the time held in Waitlist time and when the request can or cannot be confirmed, the Waitlist timing will be not be adjusted.

Examples

The Coordinator holds 0920 arrival and 1020 departure in their Waitlist. The airline requests an aircraft type change using the existing cleared time held by the coordinator:

```
SCR
/
W10
15JAN
ORY
CAF802 AF810 31OCT26MAR 1234567 290AB3 FCONCE0910 1030LHRMAN JJ
RAF802 AF810 31OCT26MAR 1234567 228752 FCONCE0910 1030LHRMAN JJ
```

```
SCR
/
W10
15JAN
ORY
XAF802 AF810 31OCT26MAR 1234567 290AB3 FCONCE0910 1030LHRMAN JJ
KAF802 AF810 31OCT26MAR 1234567 228752 FCONCE0910 1030LHRMAN JJ
/ CA.GA CD.GA RA.0920 RD.1020/
```

Should the coordinator be unable to accommodate the aircraft change the response will be:

```
SCR
/
W10
15JAN
ORY
HAF802 AF810 31OCT26MAR 1234567 290AB3 FCONCE0910 1030LHRMAN JJ
UAF802 AF810 31OCT26MAR 1234567 228752 FCONCE0910 1030LHRMAN JJ
/ CA.GA CD.GA RA.0920 RD.1020/
```

It is recommended the airline explicitly indicates the Waitlist timings required on the **I/R** data line using the Requested Timings Indicator.

Example

The Coordinator holds 0920 arrival and 1020 departure in their Waitlist. The airline requests an aircraft type change using the existing cleared time held by the coordinator and indicates the Waitlist timings using the Requested Timings Indicator:

```
SCR
/
W10
15JAN
ORY
CAF802 AF810 31OCT26MAR 1234567 290AB3 FCONCE0910 1030LHRMAN JJ
RAF802 AF810 31OCT26MAR 1234567 228752 FCONCE0910 1030LHRMAN JJ
/ RA.0920 RD.1020/
```

```
SCR
/
W10
15JAN
ORY
XAF802 AF810 31OCT26MAR 1234567 290AB3 FCONCE0910 1030LHRMAN JJ
KAF802 AF810 31OCT26MAR 1234567 228752 FCONCE0910 1030LHRMAN JJ
/ CA.GA CD.GA RA.0920 RD.1020/
```

6.12.2 WIR Procedures

The WIR procedures allow an airline to request and to receive a response on the slot information recorded in the coordinator or facilitator Waitlist for either its own Waitlist requests or the Waitlist requests of another airline.

They also allow a coordinator to advise an airline—on an unsolicited basis and at any time during or after the SC—the status of the slot information recorded in the coordinator or facilitators Waitlist database.

Requests for information will not be processed unless the airline designator in the Schedule Information data line corresponds with an authorized teletype address or the generic email address as listed in SSIM Attachment 2.

Responses to a WIR must only be transmitted to the originator of the request as specified in the Type B/email address.

Unsolicited WIR originating from a coordinator or facilitator must only be transmitted to the authorized teletype address or the ‘generic’ email address of the airline holding a Waitlist request at the specified airport.

Airline WIR

The airline submits a WIR message to a coordinator at a specified airport using Action Code **Q** to request the status of its Waitlist (new and/or changes to existing clearances) or the Waitlist for other airlines operating at the airport.

The airline will specify the ‘search’ criteria as one or more of the following:

- all flights (arrival, departure or transit/turnout);
- all airlines or a specific airline;
- specific flight(s) for a specific airline;

- the whole Season;
- part of a Season;
- all days and/or times throughout the whole Season;
- specific days and/or times throughout the whole Season;
- specific days and/or times.

Example

```
WIR
/0A12FEB
S03
12FEB
FRA
Q0A 0A
```

Coordinator Reply to WIR

The coordinator advises the airline of the status of its Waitlist with a WIR message using Action Code **P**.

The coordinator may indicate the cleared times using the Cleared Time Identifier(s).

Example

```
WIR
/0A12DEC
S03
12DEC
FRA
Q0A 0A
```

```
WIR
/FRA12DEC
S03
12DEC
FRA
REYT/0A12DEC
P0A752 0A753 24MAR31MAY 1030507 111735 ATH0940 1030ATH JJ
/ AA.0910 AD.1010/
P0A752 0A753 24MAR31MAY 0204000 111735 ATH0940 1030ATH JJ
/ AA.0930 AD.1020/
P0A752 0A753 24MAR31MAY 0000060 111735 ATH0940 1030ATH JJ
```

Note: *The last data line for the day 6 operation does not have any associated cleared time data tags (AA. or AD.). This means these flights do not hold any slot clearances.*

```
WIR
/TP15FEB
W03
15FEB
HEL
QQQQ QQQ 26OCT27MAR 1234500 1200 1555
```

```
WIR
/HEL16FEB
W03
16FEB
HEL
REYT/TP15FEB
PAY836 AY833 26OCT27MAR 1234500 171321 LHR1225 1305LHR JJ
PKF872 KF873 26OCT27MAR 1234500 171321 CDG1425 1525CDG JJ
PAY862 AY863 26OCT27MAR 1234500 171321 ZRH1435 1545ZRH JJ
```

```
WIR
/AZ12FEB
W03
12FEB
FRA
QOA752 OA753 24MAR31MAY 1234567 0900 1100
```

```
WIR
/FRA12FEB
S03
12FEB
FRA
REYT/AZ12FEB
POA752 OA753 24MAR31MAY 1030507 111735 ATH0940 1030ATH JJ
/ AA.0910 AD.1010/
POA752 OA753 24MAR31MAY 0204060 111735 ATH0940 1030ATH JJ
/ AA.0930 AD.1020/
```

6.12.3 WCR Procedure

The WCR Procedures are used by airlines and coordinators or facilitators to change Waitlist requests.

These procedures allow an airline to:

- submit changes to their Waitlist without impacting the existing clearance;
- maintain or delete the existing clearance and delete the Waitlist request held by the coordinator or facilitator;
- request that a new slot allocation request be placed on the Waitlist.

WCR may be used in standard telegraph messages or electronic data exchanges.

Replies will be transmitted solely to the originator of the request as per the generic email address.

Replies will not be transmitted unless the airline designator in the Schedule Information data line is:

- either identical to the airline designator Type B/email address of the originator;
- or corresponds to the additional authorized teletype address as listed in SSIM Attachment 2 for the requesting carrier.

A diagram of the message exchange flows between airlines and coordinators with relevant action codes is presented below.

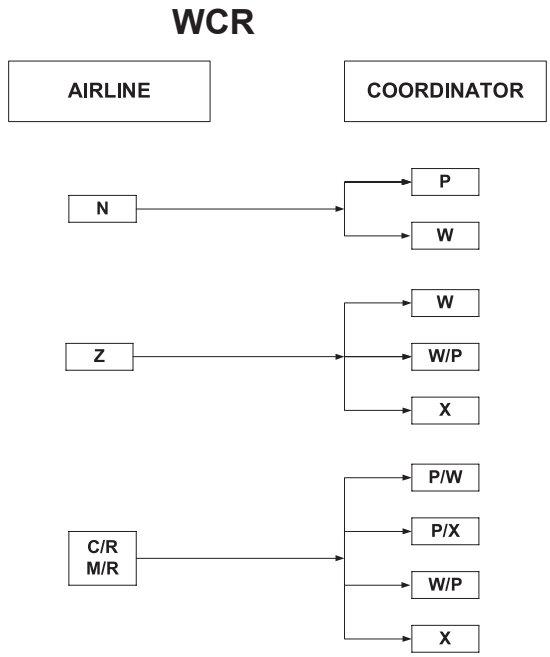

6.12.3.1 Airline WCR

The airline uses one of the following procedures with the appropriate Action Code or combination of Action Codes to request changes to its Waitlist requests.

Airline WCR	Action Code(s)
Revision to Waitlist	**C** and **R** or **M** and **R**
New Addition to Waitlist	**N**
Delete from Waitlist or Delete Waitlist and Retain Existing Clearance	**Z**

C/R or M/R Procedure—Revision to Waitlist

An airline uses the **C/R** or **M/R** procedure during or after the SC to request changes to the Waitlist.

For each change to the Waitlist, the airline submits a WCR message with:

- a data line with Action Code **C** or **M** to identify the Waitlist request recorded by the coordinator;
- one or more data lines with Action Code **R** to indicate revisions to the Waitlist requests.

The use of **C/R** or **M/R** indicates to the coordinator that the Waitlist currently recorded is to be cancelled (**C** or **M** data line) and replaced by the revisions to the Waitlist requests (**R** data line).

A transaction consisting of multiple **C** and **R** or **M** and **R** data lines must include all **C** or **M** data lines first followed by all associated **R** data lines. The total of such associated **C** or **M** with the **R** data lines must not exceed ten lines.

However, subject to message length constraints, an unlimited number of transactions can be contained in a single message.

Airlines must be aware that the **C** or **M** data line in a WCR message always refers to the Waitlist and not to an existing clearance.

Example

```
CAF2402 AF810 29MAR24OCT 1234567 290AB4 NCE0910 1030LHR JJ
RAF2402 AF810 29MAR24OCT 1234567 290AB4 NCE0900 1020LHR JJ
```

N Procedure—New Addition to Waitlist Database

An airline uses the **N** procedure request that an existing clearance be added to the Waitlist at a new time for possible improvement.

This also indicates to the coordinator that the existing clearance is to be maintained if no improvement is possible.

For each new slot request to be added, the airline submits a WCR message with a data line with Action Code **N** to identify the additional Waitlist request.

Example

```
NAF2402 AF810 29MAR24OCT 1234567 290AB4 NCE0910 1030LHR JJ
```

Z Procedure—Delete from Waitlist

An airline uses the **Z** procedure to delete the Waitlist request recorded by the coordinator for either existing clearances or for new slot allocation requests.

For existing clearances, the use of **Z** indicates to the coordinator that no further improvement will be required.

When a clearance cannot be confirmed for new slot allocation requests, the use of **Z** indicates to the coordinator that the Waitlist can be deleted as the clearance is no longer required.

Example

```
ZAF2402 AF810 29MAR24OCT 1234567 290AB4 NCE0910 1030LHR JJ
```

6.12.3.2 Coordinator Response to WCR—C/R Procedure

The coordinator uses one of the following procedures with the appropriate Action Code or combination of Action Codes to respond to the airline Waitlist Change request.

Coordinator WCR Responses	Action Code(s)
Revision to Waitlist (**C/R, M/R**)	**W/P, X/P**
New Addition to Waitlist (**N**)	**P, W**
Delete from Waitlist/Delete Waitlist and Retain Existing Clearance (**Z**)	**W, W/P, X**

Pending—Able to Confirm

When the coordinator can amend the Waitlist, this is confirmed to the airline by a WCR message using Action Codes **P** and **X**.

The revised Waitlist data is confirmed using Action Code **P** to replace the **R** data line and the cancellation of existing Waitlist is confirmed using Action Code **X** to replace the **C** or **M** data line.

Example

```
WCR
/AF1506
W03
16JUN
FRA
CAF802 AF810 26OCT27MAR 1234567 290AB3 FCONCE0910 1030LHRMAN JJ
RAF802 AF810 26OCT27MAR 1234567 290AB3 FCONCE0920 1050LHRMAN JJ
```

```
WCR
/FRA1606
W03
18JUN
FRA
REYT/AF1506
XAF802 AF810 26OCT27MAR 1234567 290AB3 FCONCE0910 1030LHRMAN JJ
PAF802 AF810 26OCT27MAR 1234567 290AB3 FCONCE0920 1050LHRMAN JJ
```

Pending—Unable to Confirm

When the coordinator cannot amend the Waitlist due to circumstances such as curfews and airport closures, the existing data held in the database (the **C** or **M** data line) is automatically retained.

The coordinator will advise the airline using Action Code **P** to identify the existing data and Action Code **U** to advise that the request cannot be confirmed.

Example

```
WCR
/AF1506
W03
16JUN
CPH
CAF802 AF810 26OCT27MAR 1234567 290AB3 FCONCE2210 2350LHRMAN JJ
RAF802 AF810 26OCT27MAR 1234567 350744 FCONCE2220 2350LHRMAN JJ
```

```
WCR
/CPH1606
W03
18JUN
CPH
REYT/AF1506
PAF802 AF810 26OCT27MAR 1234567 290AB3 FCONCE2210 2350LHRMAN JJ
UAF802 AF810 26OCT27MAR 1234567 350744 FCONCE2210 2350LHRMAN JJ
SI744 AIRCRAFT NOT ALLOWED TO LAND OR TAKEOFF BETWEEN 2200 AND 0900
```

Pending—Unable to Reconcile Flight Information

When a Waitlist change does not coincide with the data currently held by the coordinator, no action is taken on the request.

This will be confirmed to the airline by a WCR message using Action Codes **P** and **W**.

The data that the airline believes has been recorded by the coordinator is returned to the airline using Action Code **W** to replace the **C** or **M** data line. The data held by the coordinator is confirmed to the airline using Action Code **P**.

No action is taken on the **R** data line.

Example

```
WCR
/AF1506
W03
16JUN
CPH
CAF802 AF810 26OCT27MAR 1234567 290AB3 FCONCE0910 1030LHRMAN JJ
RAF802 AF810 26OCT27MAR 1234567 290AB3 FCONCE0920 1050LHRMAN JJ
```

```
WCR
/CPH1606
W03
18JUN
CPH
REYT/AF1506
WAF802 AF810 26OCT27MAR 1234567 290AB3 FCONCE0910 1030LHRMAN JJ
PAF802 AF810 26OCT27MAR 1234567 290AB3 FCONCE0915 1040LHRMAN JJ
```

6.12.3.3 Coordinator Response to WCR—N Procedure

Pending—Able to Confirm

When the coordinator can add the new requested slot to the Waitlist, this is confirmed to the airline by a WCR message using Action Code **P**.

Example

```
WCR
/AF1506
W03
16JUN
CPH
NAF2402 AF810 29MAR24OCT 1234567 290AB4 NCE0910 1030LHR JJ

WCR
/CPH1706
W03
17JUN
CPH
REYT/AF1506
PAF2402 AF810 29MAR24OCT 1234567 290AB4 NCE0910 1030LHR JJ
```

Pending—Unable to Confirm

When the coordinator cannot add the new requested slot to the Waitlist, the coordinator will advise the airline using Action Code **U**.

Example

```
WCR
/AF1506
W03
16JUN
CPH
NAF2402 AF810 29MAR24OCT 1234567 290AB3 NCE0940 1030LHR JJ

WCR
/CPH1606
W03
18JUN
CPH
REYT/AF1506
UAF2402 AF810 29MAR24OCT 1234567 290AB3 NCE0940 1030LHR JJ
```

6.12.3.4 Coordinator Response to WCR—Z Procedure

Cancellation—Able to Confirm

The coordinator confirms to the airline that the Waitlist data has been deleted from the Waitlist by a WCR message using Action Code **X**.

Example

```
WCR
/AF1506
W03
16JUN
CPH
ZAF802 AF810 26OCT27MAR 1234567 290AB3 FCONCE0910 1030LHRMAN JJ

WCR
/CPH1606
W03
16JUN
CPH
XAF802 AF810 26OCT27MAR 1234567 290AB3 FCONCE0910 1030LHRMAN JJ
```

Cancellation—Unable to reconcile flight information

When the flight information in the cancellation request does not coincide with the information currently held by the coordinator, no action is taken on the request.

This will be confirmed to the airline by a WCR message using Action Codes **P** and **W**.

The cancel request is returned to the airline using Action Code **W** to replace the **Z** data line.

The data as held by the coordinator is confirmed to the airline using Action Code **P** to replace the **C** data line.

Example

```
WCR
/AF1506
W03
16JUN
CPH
ZAF802 AF810 26OCT27MAR 1234567 290AB3 FCONCE0910 1030LHRMAN JJ

WCR
/CPH1606
W03
16JUN
CPH
REYT/AF1506
WAF802 AF810 26OCT27MAR 1234567 290AB3 FCONCE0910 1030LHRMAN JJ
PAF802 AF810 26OCT27MAR 1234567 290AB3 FCONCE0920 1040LHRMAN JJ
SI PLS NOTE DIFFERENT DATA FOR THE DELETION REQUEST
```

6.12.4 Coordinator Initiated SCRs and Waitlisted Times

The coordinator can initiate further action to times held on the Waitlist using SCRs. The SCR procedures must be used with //WAITLIST for the conditional special reference line as outlined in Section 6.9. This may be undertaken without any request for improvement being submitted by the airline.

The coordinator will advise the airline that the slot can be improved using Action Code **O** for new offer in combination with Action Code **H** to indicate the slot currently held and Action Code **U** to reflect the data on the Waitlist.

Example

```
SCR
//LT//WAITLIST/NRT15DEC
W03
15DEC
NRT
HAF2402 AF810 01JAN27MAR 1234567 290763 NCE0920 1030LHR JJ
UAF2402 AF810 01JAN27MAR 1234567 290763 NCE0950 1110LHR JJ
OAF2402 AF810 01JAN27MAR 1234567 290763 NCE0940 1050LHR JJ
```

The airline can accept this improvement replying with Action Code **A** or **P** against the offer.

The airline can decline the offer using Action Code **Z**. In this case the coordinator will maintain the slots held (as per the **H** line of the above example) and the originally requested time on the U line will remain on the Waitlist. The Coordinator will advise the airline of this using an SCR with Action Code **H/X** as illustrated in the example below. Should further dialog between airline and coordinator be necessary then the WCR procedure will be used (6.12.3).

Example

Airline declines offer:

```
SCR
//LT//WAITLIST/NRT15DEC
W03
16DEC
NRT
/REYT 15DEC
ZAF2402 AF810 01JAN27MAR 1234567 290763 NCE0940 1050LHR JJ
```

Coordinator confirmation of data held:

```
SCR
//LT//WAITLIST/NRT15DEC
W03
17DEC
NRT
/REYT 16DEC
HAF2402 AF810 01JAN27MAR 1234567 290763 NCE0920 1030LHR JJ
/RA.0950 RD.1110/
XAF2402 AF810 01JAN27MAR 1234567 290763 NCE0940 1050LHR JJ
```

The above examples also show the use of the Local Time identifier in association with another Special Handling identifier in this case //WAITLIST.

For new slots held on the Waitlist as no slots the coordinator will advise the airline using a combination of Action Code **U** and Action Code **O**.

Example

```
SCR
//WAITLIST
W03
16DEC
CPH
UAF2402 AF810 01JAN27MAR 1234567 290763 NCE0920 1030LHR JJ
OAF2402 AF810 01JAN27MAR 1234567 290763 NCE1050 1150LHR JJ
```

The airline can accept this improvement replying with Action Code **A** or **P** against the offer.

The airline can decline the offer using Action Code **Z**. In this case the coordinator will maintain the previously requested time on the U line in the Waitlist. The Coordinator will advise the airline of this using an SCR with Action Code **U/X** as illustrated in the example below. Should further dialog between airline and coordinator be necessary then the WCR procedure will be used (6.12.3).

Airline declines offer:

```
SCR
//WAITLIST
W03
16DEC
CPH
/REYT 15DEC
ZAF2402 AF810 01JAN27MAR 1234567 290763 NCE1050 1150LHR JJ
```

Coordinator confirmation of data held:

```
SCR
//WAITLIST
W03
17DEC
CPH
/REYT 16DEC
UAF2402 AF810 01JAN27MAR 1234567 290763 NCE0920 1030LHR JJ
XAF2402 AF810 01JAN27MAR 1234567 290763 NCE1050 1150LHR JJ
```

6.12.5 Airline SCR/SMAs and Waitlisted Time Updates

The airline may use the Requested Timing Indicator on an SCR or SMA message to make updates to the Coordinator's Waitlist. This may occur when the airline knows the Requested Timing is unavailable but also knows a less optimal slot time close to this time is available and could be used for the operation if need be. Alternatively this may be used in a Slot Swap message to update the Waitlist.

When an airline provides Waitlist times using the requested timing indicator then the coordinator should confirm the Waitlist times using the requested timing indicator in the coordinator's response.

Examples

Airline new flight request:

```
SCR
//LT/NRT15DEC
W03
15DEC
NRT
NAF2402 AF810 01JAN27MAR 1234567 290763 NCE0920 1030LHR JJ
/ RA.0940 RD.1105/
```

Coordinator confirmation of data held (including the Waitlist update):

```
SCR
//LT/AF15DEC
W03
15DEC
NRT
REYT/NRT15DEC
KAF2402 AF810 01JAN27MAR 1234567 290763 NCE0920 1030LHR JJ
/ RA.0940 RD.1105/
```

Airline requests a slot time change and simultaneously updates the Waitlist:

```
SCR
//LT/NRT15DEC
W03
15DEC
NRT
CAF1955 AF1954 01JAN27MAR 1234567 290763 NCE0720 0830LHR JJ
RAF1955 AF1954 01JAN27MAR 1234567 290763 NCE0920 1030LHR JJ
/ RA.0940 RD.1105/
```

Coordinator confirmation of data held (including the Waitlist update):

```
SCR
//LT/AF15DEC
W03
15DEC
NRT
REYT/NRT15DEC
XAF1955 AF1954 01JAN27MAR 1234567 290763 NCE0720 0830LHR JJ
KAF1955 AF1954 01JAN27MAR 1234567 290763 NCE0920 1030LHR JJ
/ RA.0940 RD.1105/
```

Slot Swap between two airlines with one updating the Waitlist:

```
SCR
//SWAP/AY15OCT
W03
15OCT
BRU
CAY821 AY822 26OCT27MAR 1234567 141M82 HEL0830 0940HEL JJ
CKL825 KL826 26OCT27MAR 1234567 113733 AMS0650 0755AMS JJ
LAY821 AY822 26OCT27MAR 1234567 141M82 HEL0650 0755HEL JJ
/ RA.0700 RD.0810/
LKL825 KL826 26OCT27MAR 1234567 113733 AMS0830 0940AMS JJ
```

Coordinator confirmation of data held (including the Waitlist update). Same message distributed to both carriers involved in the swap:

```
SCR
//SWAP/AYKL15OCT
W03
15OCT
BRU
REYT/AY15DEC
XAY821 AY822 26OCT27MAR 1234567 141M82 HEL0830 0940HEL JJ
XKL825 KL826 26OCT27MAR 1234567 113733 AMS0650 0755AMS JJ
KAY821 AY822 26OCT27MAR 1234567 141M82 HEL0650 0755HEL JJ
/ RA.0700 RD.0810/
KKL825 KL826 26OCT27MAR 1234567 113733 AMS0830 0940AMS JJ
```

CHAPTER 7—PRESENTATION AND TRANSFER OF A SCHEDULE DATA SET

7.1 General

This Chapter describes the rules for formatting complete schedules for processing by computerized systems. A complete schedule comprises all services operated under an Airline Designator for the Period of Schedule Validity as specified in Record Type 2.

These rules define the formats of schedules to be transmitted between two computers.

Communication of schedules by direct computer-to-computer transmission depends on the hardware and software used by each party and the standards for the transmission should be agreed bilaterally.

Technical characteristics of physical devices may also be agreed bilaterally but some examples of minimum standards are defined in the Technical Specifications section.

The rules have been constructed by the Schedules Information Standards Committee in close liaison with the ATC Passenger Committee, a committee of the ATC (Air Traffic Conference of America—Division of Airlines for America, A4A). This definition can thus be regarded as a world standard, equally usable for International IATA Carriers and for the American Domestic Carriers, each with their own special requirements.

This schedule transfer will also involve other organisations, such as air traffic control authorities and timetable agencies.

In order to facilitate industrywide acceptance, a range of optional features, such as the use of local times, non-weekly flight indicator, meal codes, traffic rights/prohibition notes, free text Data Elements, etc. have been included in the data formats.

7.2 Principles for the Transfer of Computerized Schedules

7.2.1 Data transfer takes place on a bilateral basis.

7.2.2 The data transferred must not be reforwarded to other parties unless permission is granted in a bilateral agreement.

7.2.3 Unless bilaterally agreed, the SSIM Standards for transferring computerized schedules give only the facility to transmit **complete schedules**. It is the responsibility of the recipient to select those areas of the schedule which he requires, rather than for the sender to select parts of schedules. This means that the recipient determines which parts of the schedule are relevant for his own purposes and which parts of the schedule have changes since previous issues.

It is recommended that at least 360 days of advance schedules data, including Minimum Connect Time data, should be distributed on an equal basis to all schedules aggregators, reservations and ticketing systems in which a carrier participates, to maximise the efficiencies of such systems.

7.2.4 File or transmission may contain for any one carrier (represented by a unique Airline Designator) sets of schedules of different status and period of validity. It is not obligatory to send schedules within discrete IATA seasons. This is, however, recommended in respect of schedules for IATA Schedules Conference.

7.2.5 Whenever a schedule is received the information contained supersedes all information covering the same period on a previously received file.

7.3 Computerized Schedules constraints

Five Data Records have been defined. Each complete schedule is made up of a combination of these five record types. Each record is 200 bytes long and is subdivided into Data Elements.

Each Data Element is expressed in a single fixed length format; it occupies a fixed position in a record. The Data Element Status describes whether the information is mandatory, conditional or optional, also how redundant information is to be padded, e.g. with blanks or zeroes. Incompletely filled or unused Data Elements will be padded so that all records are 200 bytes long.

It is important to recognize that schedules may be sent in Local Time or UTC. A UTC/Local Time Variation field is supplied for conversion from one standard to the other. This will mean that Local Time oriented carriers (such as American domestics) can use this format to exchange schedules between themselves in Local Time. Likewise, UTC oriented carriers can do the same in UTC. Exchange between a UTC oriented user and a Local Time oriented user will be carried out in UTC or Local Time by bilateral agreement:

All data will be expressed in EBCDIC or ASCII;

A blank should be equivalent to the space character, defined as hexadecimal 40;

A zero should be equivalent to the display zero character, defined as hexadecimal F0;

Records will be blocked in 5's, i.e. one block is equivalent to 5 × 200 byte records.

7.4 Record Organisation

Five Record Types are used. These are:

Header Record, Carrier Record, Flight Leg Record, Segment Data Record and Trailer Record.

1st Block—Header Record—Record Type 1 (Mandatory)

The first 200 bytes will comprise the record itself. The block will then be filled with 4 × 200 byte zero records to the standard 1000 byte block length.

2nd Block—Carrier Record—Record Type 2 (Mandatory)

The first 200 bytes will comprise the record itself. The block will then be filled with 4 × 200 byte zero records to the standard 1000 byte block length.

3rd and—subsequent blocks

The third block is used to commence expressing the schedule data. Subsequent 200 byte records blocked in 5's will be used to describe the total schedule desired. If the schedule terminates in the middle of a block, e.g. record 2 of block 41, then the block must be filled as appropriate with 200 byte zero records to the standard 1000 byte block length.

(a) **Flight Leg Record—Record Type 3** (Mandatory)

(b) **Segment Data Record—Record Type 4** (Conditional for Data Element Identifiers below 100 and Data Element Identifiers associated with Traffic Restrictions; Optional for others)

Other (Repeated) Record Types 3 and 4 before Trailer Record

Subsequent Block—Trailer Record—Record Type 5 (Mandatory)

The first 200 bytes will comprise the record itself. The block will then be filled with 4 × 200 byte zero records to the standard 1000 byte block length.

Further sets of Carrier, Flight Leg, Segment Data and Trailer records may be included.

End of file will be marked by a further two standard length blocks containing only zeros, followed by at least two physical tape marks.

Note: *Segment Data Records should always immediately follow the Flight Leg Record to which they refer. Flight Leg Records should be in Flight Designator order, within that by Itinerary Variation Identifier, and within that by Leg Sequence Number.*

7.5 Record Composition

7.5.1 Header Record—Record Type 1

The record has a standard length of 200 bytes broken into the following fields. The purpose of this record is to assure the users that the data set is being correctly read, and defines, where applicable, the number of seasons which follow.

Bytes From	To	Data Element	Data Element Status	Remarks
1	1	**Record Type**	**M**	Always 1
2	35	**Title of Contents**	**M**	Always reads AIRLINE STANDARD SCHEDULE DATA SET
36	40	(Spare)	M	Blank fill
41	41	**Number of Seasons**	**O**	Blank fill
42	191	(Spare)	**M**	Blank fill
192	194	**Data Set Serial Number**	**M**	
195	200	**Record Serial Number**	**M**	Always 000001

7.5.2 Carrier Record—Record Type 2

The record gives an indication of the period(s) of applicability of the schedules that follow on subsequent records. The record has the standard length of 200 bytes broken into the following fields:

Bytes From	To	Data Element	Data Element Status	Remarks
1	1	**Record Type**	**M**	Always 2
2	2	**Time Mode**	**M**	U = UTC L = Local Time
3	5	**Airline Designator**	**M**	IATA Airline Designator of carrier whose schedules are contained within this Carrier/ Trailer Record Left justify
6	10	(Spare)	**M**	Blank fill
11	13	**Season**	**O**	Blank fill
14	14	(Spare)	**M**	Blank fill

Bytes From	To	Data Element	Data Element Status	Remarks
15	28	**Period of Schedule Validity** (from) bytes 15–21 (to) bytes 22–28	**M**	First and last date of the schedules contained within this Carrier/Trailer Record. Shown as day, month, year in the time mode as specified in byte 2. ***Note:*** *When the Scheduled Time of Aircraft Departure (STD) is stated in Local Time and the recipient converts to UTC, or vice versa, the Period of Operation may need to be adjusted to maintain the correct Days of Operation around season boundaries and across Daylight Saving Time changes. If this is not done correctly, a lost day of operation and/or a day duplication may occur.*
29	35	**Creation Date**	**M**	Day, month, year of data set creation (e.g. `01APR90`)
36	64	**Title of Data**	**O**	Free format, blank fill e.g. `SAS IATA DRAFT S90`
65	71	**Release (Sell) Date**	**O**	Day, month, year or blank fill
72	72	**Schedule Status**	**M**	`P` or `C`
73	107	**Creator Reference**	**O**	Free format, blank fill
108	108	**Duplicate Airline Designator Marker**	**C**	Blank fill
△ 109	168	**General Information**	**O**	Free format, blank fill
169	169	**Secure Flight Indicator**	**O**	Blank Fill S if subject to regulations
170	188	**In-Flight Service Information** defaults	**O**	The format is as defined in Chapter 2, except that the DEI (503) is not required. Right justified, blank fill
189	190	**Electronic Ticketing Information**	**O**	`EN` = default for Carrier is that flight legs are Not Electronic Ticketing Candidates `ET` = default for Carrier is that flight legs are Electronic Ticketing Candidates
191	194	**Creation Time**	**M**	Hours, minutes of data set creation, e.g. `1346`.

Bytes From	To	Data Element	Data Element Status	Remarks
195	200	**Record Serial Number**	**M**	Numeric. One greater than the previous record which must have been either a Header Record or a Trailer Record. Zero fill. Right justified. See Chapter 2 Record Serial Number description if record count exceeds 999999.

7.5.3 Flight Leg Record—Record Type 3

The record(s) gives schedule details leg by leg for each Flight Designator. The record has a standard length of 200 bytes broken into the following fields:

Bytes From	To	Data Element	Data Element Status	Remarks
1	1	**Record Type**	**M**	Always 3
2	2	**Operational Suffix**	**C**	Blank fill
(3)	(9)	**Flight Designator**	**M**	
3	5	Airline Designator	M	Left justified. Code as in bytes 3–5 of Record Type 2
6	9	Flight Number	M	Right justified, blank fill
10	11	**Itinerary Variation Identifier**	**M**	Number between 01 and 99
12	13	**Leg Sequence Number**	**M**	Number between 01 and 99, sequencing continuous flight legs as they operate within each Itinerary Variation Identifier
14	14	**Service Type**	**M**	Alpha
15	28	**Period of Operation** (from) bytes 15–21 (to) bytes 22–28	**M**	Day, month, year This field applies to the aircraft STD and must be compatible with the Time Mode in byte 2 of Record Type 2
29	35	**Day(s) of Operation**	**M**	This field applies to the aircraft STD and must be compatible with the Time Mode in byte 2 of Record Type 2. This field is blank filled, for non-operational days
36	36	**Frequency Rate**	**C**	Blank fill
37	39	Departure **Station**	**M**	3-character IATA code
40	43	**Scheduled time of Passenger Departure (Passenger STD)**	**M**	This field must be compatible with the Time Mode in byte 2 of Record Type 2. Although this time will nearly always be the same as aircraft STD it must be completed

Bytes From	To	Data Element	Data Element Status	Remarks
44	47	**Scheduled Time of Aircraft Departure (Aircraft STD)**	**M**	This field must be compatible with Time Mode in byte 2 of Record Type 2.
48	52	**UTC/Local Time Variation** (for Departure Station)	**M**	Hours and Minutes variation from UTC (see Appendix F)
53	54	**Passenger Terminal** for departure station	**C**	Alphanumeric, left justify, blank fill
55	57	Arrival **Station**	**M**	3-character IATA code
58	61	**Scheduled Time of Aircraft Arrival (Aircraft STA)**	**M**	This field must be compatible with the Time Mode in byte 2 of Record Type 2.
62	65	**Scheduled time of Passenger Arrival (Passenger STA)**	**M**	This field must be compatible with the Time Mode in byte 2 of Record Type 2. Although this time will nearly always be the same as aircraft STA it must be completed
66	70	**UTC/Local Time Variation** (for Arrival Station)	**M**	Hours and Minutes variation from UTC (see Appendix F)
71	72	**Passenger Terminal** for arrival station	**C**	Alphanumeric, left justify, blank fill
73	75	**Aircraft Type**	**M**	IATA Aircraft Type. See Appendix A.
76	95	**Passenger Reservations Booking Designator (PRBD)** **Note:** Either this field or the Aircraft Configuration/Version (in bytes 173–192) is mandatory.	**C**	Blank fill
96	100	**Passenger Reservations Booking Modifier (PRBM)**	**C**	Blank fill by Passenger Reservations Booking Designator class
101	110	**Meal Service Note**	**O**	Blank fill by Passenger Reservations Booking Designator class
111	119	**Joint Operation Airline Designators**	**C**	In the case of 2 character Airline Designators bytes 113 and/or 116 and/or 119 must be blank. Left justify and blank fill if fewer than three carriers.
120	121	**Minimum Connecting Time International/Domestic Status**	**O**	Blank fill Two character combination of D and/or I Position 120 is leg departure status Position 121 is leg arrival status
122	122	Secure Flight Indicator	**O**	Blank Fill S if subject to regulations
123	127	(Spare)	**M**	Blank fill

Bytes From	To	Data Element	Data Element Status	Remarks
128	128	**Itinerary Variation Identifier Overflow**	**C**	Blank fill
129	131	**Aircraft Owner**	**C**	Left justify, blank fill
132	134	**Cockpit Crew Employer**	**C**	Left justify, blank fill
135	137	**Cabin Crew Employer**	**C**	Left justify, blank fill
(138)	(146)	**Onward Flight**	**O**	Blank fill
138	140	Airline Designator	M	Left justify, blank fill
141	144	Flight Number	M	Right justify, blank fill
145	145	Aircraft Rotation Layover	C	Blank fill
146	146	Operational Suffix	C	Blank fill
147	147	**Spare**	**M**	Blank fill
148	148	**Flight Transit Layover**	**C**	Blank fill
149	149	**Operating Airline Disclosure—Code Share (DEI 2) or Operating Airline Disclosure—Shared Airline or Wet Lease Designation (DEI 9)**	**C**	Blank fill
150	160	**Traffic Restriction Code**	**C**	Blank fill
161	161	**Traffic Restriction Code Leg Overflow Indicator**	**C**	Blank fill
162	172	(Spare)	**M**	Blank fill
173	192	**Aircraft Configuration/Version** **Note:** Either this field or the Passenger Reservations Booking Designator (bytes 76–95) is mandatory.	**C**	Blank fill
193	194	**Date Variation**	**O**	Blank fill
195	200	**Record Serial Number**	**M**	Right justified, 0 filled and sequential to previous record irrespective of its Record Type. See Chapter 2 Record Serial Number description if record count exceeds 999999.

7.5.4 Segment Data Record—Record Type 4

The record(s) specifies the information applicable to a unique Flight Leg Record as specified in bytes 02–14.

Although no order is prescribed when multiple Data Element Identifiers follow the same Flight Leg Record, the following is recommended:

— when multiple Segment Data Records apply to different Off Points, the Segment Data Records should be ordered according to the occurrence of the Off Point in the itinerary;

— if multiple Segment Data Records apply to the same Off Point, they should appear together and be ordered according to the numeric sequence of the Data Element Identifiers starting with the lowest number.

However, systems should be able to process data elements in any order.

The record has a standard length of 200 bytes broken into the following fields:

Bytes From	To	Data Element	Data Element Status	Remarks
1	1	**Record Type**	**M**	Always 4
2	2	**Operational Suffix**	**C**	Blank fill
(3)	(9)	**Flight Designator**	**M**	
3	5	Airline Designator	M	Left justified. Code as in bytes 3–5 of Record Type 2.
6	9	Flight Number	M	Right justified, blank fill
10	11	**Itinerary Variation Identifier**	**M**	Number between 01 and 99
12	13	**Leg Sequence Number**	**M**	Number between 01 and 99 sequencing continuous flight legs as they operate within each Itinerary Variation Identifier
14	14	**Service Type**	**M**	Alpha
15	27	(Spare)	**M**	Blank fill
28	28	**Itinerary Variation Identifier Overflow**	**C**	Blank fill
29	29	**Board Point Indicator**	**M**	Alpha
30	30	**Off Point Indicator**	**M**	Alpha
31	33	**Data Element Identifier**	**M**	Right justify, zero fill
(34)	(39)	**Segment**	**M**	
34	36	Board Point	M	3-character IATA Code
37	39	Off Point	M	3-character IATA Code
40	194	**Data** (associated with Data Element Identifier)	C	The format for each data element is defined in Chapter 2. Blank fill.
195	200	**Record Serial Number**	**M**	Sequential to previous record irrespective of its Record Type. 0 filled. Right justified. See Chapter 2 Record Serial Number description if record count exceeds 999999.

7.5.5 Trailer Record—Record Type 5

The record defines the end of the data under the preceding Carrier Record. Further Carrier/Trailer Record combinations may appear on this data set. The record has a standard length of 200 bytes broken into the following fields:

Bytes From	To	Data Element	Data Element Status	Remarks
1	1	**Record Type**	**M**	Always 5
2	2	(Spare)	**M**	Blank fill
3	5	**Airline Designator**	**M**	Left justify
6	12	**Release (Sell) Date**	**O**	As in bytes 65–71 of Carrier Record or blank fill

Bytes From	To	Data Element	Data Element Status	Remarks
13	187	(Spare)	**M**	Blank fill
188	193	**Serial Number Check Reference**	**M**	6-digit numeric Serial Number. Equal to the Record Serial Number of the previous record irrespective of its Record Type and one less than the Record Serial Number of this Trailer Record (bytes 195–200).
194	194	**Continuation/End Code**	**M**	`C` or `E`
195	200	**Record Serial Number**	**M**	Sequential to previous record irrespective of its Record Type `0` filled. Right justified. See Chapter 2 Record Serial Number description if record count exceeds 999999.

This block is then padded to the standard length (5 × 200 bytes) with zeroes. If a new period or season is to be put on the same physical device, as the first period or seasons, then it must commence with the new Carrier Record, and then follow the rules described in this Chapter.

At the end of the data set there must be 2 further length (5 × 200 bytes) blocks, which contain only zeros. For magnetic tapes two physical tape marks must follow.

7.6 Application

The code values are as follows:

1	Arrival/departure on the next day
2	Arrival/departure two days later etc.
0	Arrival/departure on the same day
A	Arrival/departure is previous day

The first indicator stated in the format applies to the Departure Variation and the second indicator applies to the Arrival Variation.

Example:

```
3 XX 12340101J15AUG0615DEC061234567 ATL20002000-0500SLGW09000900...01
3 XX 12340102J16AUG0616DEC061234567 LGW10301030+0000SFRA13301330...11
3 XX 12340103J16AUG0616DEC061234567 FRA16001600-0100 SIN04000400...12
3 YY 010101J15AUG0615DEC061234567 AKL10301030+1000 HNL21152115...0A
3 YY 010102J14AUG0614DEC061234567 HNL23002300-1000 LAX07000700...A0
```

APPENDIX A
IATA AIRCRAFT TYPES

The Aircraft Types listed in this Appendix are designed for schedulers, airport authorities, and airport coordinators. They are available for use both in the planning stage of scheduling as well as in day-to-day operations. They also are recommended for public timetable purposes and for all internal airline planning purposes.

Codes are included for all aircraft that are currently flown, or are soon to be flown, for commercial scheduled or charter services only, or which have been announced by the manufacturer and for which airline orders have been placed. In principle new aircraft type codes are only assigned when the new aircraft has been certified.

There are two levels of codes:

(a) **Aircraft Type codes**

Each aircraft type is assigned a specific code. Within a group of aircraft covered by an Aircraft Group code, multiple Aircraft Type Codes may be assigned where substantial differences (e.g. fuselage length, wingspan, category) exist between different models of the same aircraft family. However, Aircraft Type codes will not be assigned to differentiate technical characteristics of an aircraft (i.e. engines, range, cockpit configuration etc.).

For certain categories of Aircraft Types, different codes have been assigned to reflect different service characteristics (Passenger, Mixed Configuration, Freighter).

Aircraft Type codes are designed to be used wherever precision in the specification of aircraft types is required. This applies especially in SSIM Chapter 6 applications.

(b) **Aircraft Group codes**

For aircraft sharing a family name, a common fuselage cross section and a common service character (e.g. Passenger, Cargo or Mixed Configuration) a unique Aircraft Group code will be assigned.

Aircraft Group codes are designed to be used wherever a lesser degree of precision in the specification of aircraft types is required.

Aircraft Type Publication Override

When exceptional requirements exist to use codes not listed in Appendix A (e.g. to identify specific types of trains), then the non-standard code should be stated using Data Element Identifier 121 (Aircraft Type Publication Override).

A valid Aircraft Type code should always be stated in the position reserved for Aircraft Type specification.

Surface Equipment

Aircraft Type Codes have been included to specify surface vehicle categories to cater for such passenger and cargo operations performed by airlines or Travel Partners.

General Aviation

While some codes have been assigned to Aircraft Types serving General Aviation purposes, Appendix A does not claim completeness in these assignments.

Requests for additional codes should be directed to the IATA Management in accordance with the procedure described under “Revisions” below.

A generic General Aviation type code is available for use in the context of Appendix K only.

ICAO Codes

ICAO aircraft codes are included in Appendix A for reference purposes only in order to facilitate conversion between IATA and ICAO codes. ICAO codes are used in the ATC environment and should not be used in any procedure described in SSIM.

When a conversion of an IATA code involves multiple ICAO codes, an asterisk (*) is shown instead of the ICAO code.

In cases where ICAO has not yet assigned a code for a new aircraft type, ‘ZZZZ’ is shown to indicate that the ICAO assignment is still pending except for *Freighter* where no code will be assigned and will be blank.

Category

Category of each Aircraft Type is indicated as follows:

H ..... Helicopter
J ..... Jet-engined aircraft (preceded by number of engines)
P..... Piston-engined aircraft (preceded by number of engines)
S..... Surface equipment
T ..... Turboprop-engined aircraft (preceded by number of engines)

Revisions

Requests for additions or amendments to the contents of this Appendix should be addressed to the IATA Management (E-mail: SSIM@iata.org) for consideration by the Schedules Information Standards Committee.

Aircraft Types found to be out of use for a substantial time will be deleted as revised copies of the Appendix are issued.

Encoding List

Manufacturer and Aircraft Name/Model	Aircraft Type	Aircraft Group	Category	ICAO Code	
Aerospatiale SN601 Corvette	NDC	NDC	2J	S601	
AgustaWestland A109	AGH	AGH	H	A109	
AgustaWestland AW139	AWH	AWH	2T	A139	
Airbus A300 *Passenger*		AB3			
Airbus A300B2 / A300B4 *Passenger*	AB4	AB3	2J	A30B	
Airbus A300-600 *Passenger*	AB6	AB3	2J	A306	
Airbus A300 *Freighter*		ABF			
Airbus A300B4 / A300C4 / A300F4 *Freighter*	ABX	ABF	2J	A30B	
Airbus A300-600 *Freighter*	ABY	ABF	2J	A306	
Airbus A300-600ST Beluga *Freighter*	ABB	ABF	2J	A3ST	
Airbus A310 *Passenger*		310			
Airbus A310-200 *Passenger*	312	310	2J	A310	
Airbus A310-300 *Passenger*	313	310	2J	A310	
Airbus A310 *Freighter*		31F			
Airbus A310-200 *Freighter*	31X	31F	2J	A310	
Airbus A310-300 *Freighter*	31Y	31F	2J	A310	
Airbus A318 / A319 / A320 / A321		32S			
Airbus A318	318	32S	2J	A318	
Airbus A318 (sharklets)	32C	32S	2J	A318	☐
Airbus A319	319	32S	2J	A319	
Airbus A319 (sharklets)	32D	32S	2J	A319	☐
Airbus A320	320	32S	2J	A320	
Airbus A320 (sharklets)	32A	32S	2J	A320	
Airbus A321	321	32S	2J	A321	
Airbus A321 (sharklets)	32B	32S	2J	A321	
Airbus A320 *Freighter*	32F	32F	2J	A320	
Airbus A321 *Freighter*	32X	32X	2J	A321	

ZZZZ ICAO code pending
* Multiple ICAO codes

Manufacturer and Aircraft Name/Model	Aircraft Type	Aircraft Group	Category	ICAO Code
Airbus A330		**330**		
Airbus A330-200	**332**	330	2J	A332
Airbus A330-300	**333**	330	2J	A333
Airbus A330 *Freighter*		**33F**		
Airbus A330-200 *Freighter*	**33X**	33F	2J	A332
Airbus A340		**340**		
Airbus A340-200	**342**	340	4J	A342
Airbus A340-300	**343**	340	4J	A343
Airbus A340-500	**345**	340	4J	A345
Airbus A340-600	**346**	340	4J	A346
Airbus A350		**350**		
Airbus A350-800	**358**	350	2J	ZZZZ
Airbus A350-900	**359**	350	2J	ZZZZ
Airbus A350-1000	**351**	350	2J	ZZZZ
Airbus A380 *Passenger*		**380**		
Airbus A380-800 *Passenger*	**388**	380	4J	A388
Airbus A380-800F *Freighter*	**38F**	38F	4J	A388
Aircraft Industries (LET) 410	**L4T**	L4T	2T	L410
Aircraft Industries (LET) 410 *Freighter*	**L4F**	L4F	2T	L410
Antonov An-12	**ANF**	ANF	4T	AN12
Antonov An-22	**A22**	A22	4T	AN22
Antonov An-24	**AN4**	AN4	2T	AN24
Antonov An-26 / An-30 / An-32		**AN6**		
Antonov An-26	**A26**	AN6	2T	AN26
Antonov An-30	**A30**	AN6	2T	AN30
Antonov An-32	**A32**	AN6	2T	AN32

ZZZZ ICAO code pending
* Multiple ICAO codes

Manufacturer and Aircraft Name/Model	Aircraft Type	Aircraft Group	Category	ICAO Code
Antonov An-28 / PZL Mielec M-28 Skytruck	A28	A28	2T	AN28
Antonov An-38	A38	A38	2T	AN38
Antonov An-72 / An-74	AN7	AN7	2J	AN72
Antonov An-124 Ruslan	A4F	A4F	4J	A124
Antonov An-140	A40	A40	2T	A140
Antonov AN148-100	A81	A81	2J	A148
Antonov An-158	A58	A58	2J	ZZZZ
Antonov An-225	A5F	A5F	6J	A225
ATR 42 / ATR 72		ATR		
ATR 42-300 / 320	AT4	ATR	2T	AT43 ⊗
ATR 72	AT7	ATR	2T	AT72
ATR 42 *Freighter*	ATZ	ATZ	2T	*
ATR 72 *Freighter*	ATF	ATF	2T	AT72
Avro RJ70 / RJ85 / RJ100		ARJ		
Avro RJ70	AR7	ARJ	4J	RJ70
Avro RJ85	AR8	ARJ	4J	RJ85
Avro RJ100	AR1	ARJ	4J	RJ1H
BAE Systems (BAC) One-Eleven		B11		
BAE Systems (BAC) One-Eleven 200	B12	B11	2J	BA11
BAE Systems (BAC) One-Eleven 300	B13	B11	2J	BA11
BAE Systems (BAC) One-Eleven 400 / 475	B14	B11	2J	BA11
BAE Systems (BAC) One-Eleven 500 / RomBac One-Eleven 560	B15	B11	2J	BA11

ZZZZ ICAO code pending
* Multiple ICAO codes

Manufacturer and Aircraft Name/Model	Aircraft Type	Aircraft Group	Category	ICAO Code
BAE Systems (De Havilland) 104 Dove	DHD	DHD	2P	DOVE
BAE Systems (De Havilland) 114 Heron	DHH	DHH	4P	HERN
BAE Systems (Hawker Siddeley) 748 / Andover	HS7	HS7	2T	A748
BAE Systems 146 *Passenger*		146		
BAE Systems 146-100 *Passenger*	141	146	4J	B461
BAE Systems 146-200 *Passenger*	142	146	4J	B462
BAE Systems 146-300 *Passenger*	143	146	4J	B463
BAE Systems 146 *Freighter*		14F		
BAE Systems 146-100 *Freighter*	14X	14F	4J	B461
BAE Systems 146-200 *Freighter*	14Y	14F	4J	B462
BAE Systems 146-300 *Freighter*	14Z	14F	4J	B463
BAE Systems Jetstream		JST		
BAE Systems Jetstream 31	J31	JST	2T	JS31
BAE Systems Jetstream 32	J32	JST	2T	JS32
BAE Systems Jetstream 41	J41	JST	2T	JS41
BAE Systems ATP	ATP	ATP	2T	ATP
BAE Systems ATP *Freighter*	APF	APF	2T	ZZZZ
Bell (Helicopters)	BH2	BH2	H	*
Boeing 707 / 720 *Passenger*		707		
Boeing 707-320B / 320C *Passenger*	703	707	4J	B703
Boeing 720-020B	B72	707	4J	B720
Boeing 707-320B / 320C *Mixed Configuration*	70M	70M	4J	B703
Boeing 707-320B / 320C *Freighter*	70F	70F	4J	B703
Boeing 717-200	717	717	2J	B712

ZZZZ ICAO code pending
* Multiple ICAO codes

Manufacturer and Aircraft Name/Model	Aircraft Type	Aircraft Group	Category	ICAO Code
Boeing 727 *Passenger*		**727**		
Boeing 727-100 *Passenger*	**721**	727	3J	B721
Boeing 727-200 *Passenger*	**722**	727	3J	B722
Boeing 727-200 (winglets) *Passenger*	**72W**	727	3J	B722
Boeing 727 *Mixed Configuration*		**72M**		
Boeing 727-100 *Mixed Configuration*	**72B**	72M	3J	B721
Boeing 727-200 *Mixed Configuration*	**72C**	72M	3J	B722
Boeing 727 *Freighter*		**72F**		
Boeing 727-100 *Freighter*	**72X**	72F	3J	B721
Boeing 727-200 *Freighter*	**72Y**	72F	3J	B722
Boeing 737 *Passenger*		**737**		
Boeing 737-100 *Passenger*	**731**	737	2J	B731
Boeing 737-200 *Passenger*	**732**	737	2J	B732
Boeing 737-300 *Passenger*	**733**	737	2J	B733
Boeing 737-300 (winglets) *Passenger*	**73C**	737	2J	B733
Boeing 737-400 *Passenger*	**734**	737	2J	B734
Boeing 737-500 *Passenger*	**735**	737	2J	B735
Boeing 737-500 (winglets) *Passenger*	**73E**	737	2J	B735
Boeing 737-600 *Passenger*	**736**	737	2J	B736
Boeing 737-700 *Passenger*	**73G**	737	2J	B737
Boeing 737-700 (winglets) *Passenger*/BBJ1	**73W**	737	2J	B737
Boeing 737-800 *Passenger*	**738**	737	2J	B738
Boeing 737-800 (winglets) *Passenger*/BBJ2	**73H**	737	2J	B738
Boeing 737-900 *Passenger*	**739**	737	2J	B739
Boeing 737-900 (winglets) *Passenger*/BBJ3	**73J**	737	2J	B739
Boeing 737 *Mixed Configuration*		**73M**		
Boeing 737-200 *Mixed Configuration*	**73L**	73M	2J	B732
Boeing 737-300 *Mixed Configuration*	**73N**	73M	2J	B733
Boeing 737-400 *Mixed Configuration*	**73Q**	73M	2J	B734
Boeing 737-700 *Mixed Configuration*/BBJC	**73R**	73M	2J	B737

ZZZZ ICAO code pending
* Multiple ICAO codes

Manufacturer and Aircraft Name/Model	Aircraft Type	Aircraft Group	Category	ICAO Code
Boeing 737 *Freighter*		**73F**		
Boeing 737-200 *Freighter*	**73X**	73F	2J	B732
Boeing 737-300 *Freighter*	**73Y**	73F	2J	B733
Boeing 737-400 *Freighter*	**73P**	73F	2J	B734
Boeing 737-700 *Freighter*	**73S**	73F	2J	B737
Boeing 747 *Passenger*		**747**		
Boeing 747-100 *Passenger*	**741**	747	4J	B741
Boeing 747-200 *Passenger*	**742**	747	4J	B742
Boeing 747-300 / 747-100/200 SUD *Passenger*	**743**	747	4J	B743
Boeing 747-400 *Passenger*	**744**	747	4J	B744
Boeing 747-400 (Domestic) *Passenger*	**74J**	747	4J	B74D
Boeing 747-8 *Passenger*	**74H**	747	4J	B748
Boeing 747SP *Passenger*	**74L**	747	4J	B74S
Boeing 747SR *Passenger*	**74R**	747	4J	B74R
Boeing 747 *Mixed Configuration*		**74M**		
Boeing 747-200 *Mixed Configuration*	**74C**	74M	4J	B742
Boeing 747-300 / 747-200 SUD *Mixed Configuration*	**74D**	74M	4J	B743
Boeing 747-400 *Mixed Configuration*	**74E**	74M	4J	B744
Boeing 747 *Freighter*		**74F**		
Boeing 747-100 *Freighter*	**74T**	74F	4J	B741
Boeing 747-200 *Freighter*	**74X**	74F	4J	B742
Boeing 747-300 / 747-200 SUD *Freighter*	**74U**	74F	4J	B743
Boeing 747-400 *Freighter*	**74Y**	74F	4J	B744
Boeing 747-400 Swingtail *Freighter*	**74B**	74F	4J	B744
Boeing 747-8F *Freighter*	**74N**	74F	4J	B748
Boeing 747SR *Freighter*	**74V**	74F	4J	B74R
Boeing 757 *Passenger*		**757**		
Boeing 757-200 *Passenger*	**752**	757	2J	B752
Boeing 757-200 (winglets) *Passenger*	**75W**	757	2J	B752
Boeing 757-300 *Passenger*	**753**	757	2J	B753
Boeing 757-300 (winglets) *Passenger*	**75T**	757	2J	B753
Boeing 757-200 *Mixed Configuration*	**75M**	75M	2J	B752

ZZZZ ICAO code pending
* Multiple ICAO codes

Manufacturer and Aircraft Name/Model	Aircraft Type	Aircraft Group	Category	ICAO Code
Boeing 757-200 *Freighter*	**75F**	75F	2J	B752
Boeing 767 *Passenger*		**767**		
Boeing 767-200 *Passenger*	**762**	767	2J	B762
Boeing 767-300 *Passenger*	**763**	767	2J	B763
Boeing 767-300 (winglets) *Passenger*	**76W**	767	2J	B763
Boeing 767-400 *Passenger*	**764**	767	2J	B764
Boeing 767 *Freighter*		**76F**		
Boeing 767-200 *Freighter*	**76X**	76F	2J	B762
Boeing 767-300 *Freighter*	**76Y**	76F	2J	B763
Boeing 767-300 (winglets) *Freighter*	**76V**	76F	2J	B763
Boeing 777		**777**		
Boeing 777-200 / 200ER	**772**	777	2J	B77L
Boeing 777-200LR	**77L**	777	2J	B772
Boeing 777-300	**773**	777	2J	B773
Boeing 777-300ER	**77W**	777	2J	B77W
Boeing 777 *Freighter*		**77F**		
Boeing 777-200F *Freighter*	**77X**	77F	2J	B772
Boeing 787		**787**		
Boeing 787-3	**783**	787	2J	B783
Boeing 787-8	**788**	787	2J	B788
Boeing 787-9	**789**	787	2J	B789
Boeing (Douglas) DC-3 *Passenger*	**DC3**	DC3	2P	DC3
Boeing (Douglas) DC-3 *Freighter*	**D3F**	D3F	2P	DC3
Boeing (Douglas) DC-4	**DC4**	DC4	4P	DC4
Boeing (Douglas) DC-6B *Passenger*	**DC6**	DC6	4P	DC6
Boeing (Douglas) DC-6A / DC-6B / DC-6C *Freighter*	**D6F**	D6F	4P	DC6

ZZZZ ICAO code pending
* Multiple ICAO codes

Manufacturer and Aircraft Name/Model	Aircraft Type	Aircraft Group	Category	ICAO Code
Boeing (Douglas) DC-8 *Passenger*		**DC8**		
Boeing (Douglas) DC-8-62 *Passenger*	**D8L**	DC8	4J	DC86
Boeing (Douglas) DC-8-72 *Passenger*	**D8Q**	DC8	4J	DC87
Boeing (Douglas) DC-8-62 *Mixed Configuration*	**D8M**	D8M	4J	DC86
Boeing (Douglas) DC-8 *Freighter*		**D8F**		
Boeing (Douglas) DC-8-50 *Freighter*	**D8T**	D8F	4J	DC85
Boeing (Douglas) DC-8-61 / 62 / 63 *Freighter*	**D8X**	D8F	4J	DC86
Boeing (Douglas) DC-8-71 / 72 / 73 *Freighter*	**D8Y**	D8F	4J	DC87
Boeing (Douglas) DC-9 *Passenger*		**DC9**		
Boeing (Douglas) DC-9-10 *Passenger*	**D91**	DC9	2J	DC91
Boeing (Douglas) DC-9-20 *Passenger*	**D92**	DC9	2J	DC92
Boeing (Douglas) DC-9-30 *Passenger*	**D93**	DC9	2J	DC93
Boeing (Douglas) DC-9-40 *Passenger*	**D94**	DC9	2J	DC94
Boeing (Douglas) DC-9-50 *Passenger*	**D95**	DC9	2J	DC95
Boeing (Douglas) DC-9 *Freighter*		**D9F**		
Boeing (Douglas) DC-9-10 *Freighter*	**D9X**	D9F	2J	DC91
Boeing (Douglas) DC-9-30 *Freighter*	**D9C**	D9F	2J	DC93
Boeing (Douglas) DC-9-40 *Freighter*	**D9D**	D9F	2J	DC94
Boeing (Douglas) DC-10 *Passenger*		**D10**		
Boeing (Douglas) DC-10-10 / 15 *Passenger*	**D11**	D10	3J	DC10
Boeing (Douglas) DC-10-30 / 40 *Passenger*	**D1C**	D10	3J	DC10
Boeing (Douglas) DC-10-30 *Mixed Configuration*	**D1M**	D1M	3J	DC10
Boeing (Douglas) DC-10 *Freighter*		**D1F**		
Boeing (Douglas) DC-10-10 *Freighter*	**D1X**	D1F	3J	DC10
Boeing (Douglas) DC-10-30 / 40 *Freighter*	**D1Y**	D1F	3J	DC10
Boeing (Douglas) MD-11 *Passenger*	**M11**	M11	3J	MD11
Boeing (Douglas) MD-11 *Mixed Configuration*	**M1M**	M1M	3J	MD11
Boeing (Douglas) MD-11 *Freighter*	**M1F**	M1F	3J	MD11

ZZZZ ICAO code pending
* Multiple ICAO codes

Manufacturer and Aircraft Name/Model	Aircraft Type	Aircraft Group	Category	ICAO Code
Boeing (Douglas) MD-80		**M80**		
Boeing (Douglas) MD-81	**M81**	M80	2J	MD81
Boeing (Douglas) MD-82	**M82**	M80	2J	MD82
Boeing (Douglas) MD-83	**M83**	M80	2J	MD83
Boeing (Douglas) MD-87	**M87**	M80	2J	MD87
Boeing (Douglas) MD-88	**M88**	M80	2J	MD88
Boeing (Douglas) MD82 *Freighter*	**M2F**	M2F	2J	MD82
Boeing (Douglas) MD83 *Freighter*	**M3F**	M3F	2J	MD83
Boeing (Douglas) MD88 *Freighter*	**M8F**	M8F	2J	MD88
Boeing (Douglas) MD-90	**M90**	M90	2J	MD90
Bombardier C Series		**CSB**		
Bombardier CS100	**CS1**	CSB	2J	ZZZZ
Bombardier CS300	**CS3**	CSB	2J	ZZZZ
Bombardier Challenger 300	**CL3**	CL3	2J	CL30
Bombardier BD-700 Global Express/Global 500	**CCX**	CCX	2J	GLEX
Britten-Norman BN-2A / BN-2B Islander	**BNI**	BNI	2P	BN2P
Britten-Norman BN-2A Mk.III Trislander	**BNT**	BNT	3P	TRIS
Business Turbo-Prop Aircraft	**BTA**	BTA	2T	ZZZZ
Canadair (Bombardier) CL-600 / 601 / 604 / 605 Challenger	**CCJ**	CCJ	2J	CL60
Canadair (Bombardier) Regional Jet		**CRJ**		
Canadair (Bombardier) Regional Jet 100	**CR1**	CRJ	2J	CRJ1
Canadair (Bombardier) Regional Jet 200	**CR2**	CRJ	2J	CRJ2
Canadair (Bombardier) Regional Jet 700 and Challenger 870	**CR7**	CRJ	2J	CRJ7
Canadair (Bombardier) Regional Jet 705	**CRA**	CRJ	2J	CRJ9

ZZZZ ICAO code pending
* Multiple ICAO codes

Manufacturer and Aircraft Name/Model	Aircraft Type	Aircraft Group	Category	ICAO Code
Canadair (Bombardier) Regional Jet 900 and Challenger 890	CR9	CRJ	2J	CRJ9
Canadair (Bombardier) Regional Jet 1000	CRK	CRJ	2J	CRJX
Canadair (Bombardier) Regional Jet *Freighter*	CRF	CRF	2J	ZZZZ
CASA / IAe 212 Aviocar	CS2	CS2	2T	C212
CASA / IAe CN-235	CS5	CS5	2T	CN35
CASA / IAe C-295	CS9	CS9	2T	C295
Cessna (Light aircraft)		CNA		
Cessna (Light aircraft-single piston engine)	CN1	CNA	1P	*
Cessna (Light aircraft-twin piston engines)	CN2	CNA	2P	*
Cessna (Light aircraft-single turboprop engine)	CNC	CNA	1T	*
Cessna (Light aircraft-twin turboprop engines)	CNT	CNA	2T	*
Cessna Citation		CNJ		
Cessna 500 / 501 / 525 Citation	CJ1	CNJ	2J	*
Cessna 510 Mustang Citation	CJM	CNJ	2J	C510
Cessna 550 / 551 / 552 Citation	CJ2	CNJ	2J	*
Cessna 560 Citation	CJ5	CNJ	2J	*
Cessna 560 XL/XLS Citation	CJL	CNJ	2J	*
Cessna 650 Citation	CJ6	CNJ	2J	*
Cessna 680 Citation	CJ8	CNJ	2J	*
Cessna 750 Citation X	CJX	CNJ	2J	C750
Cessna 208B *Freighter*	CNF	CNF	2T	*
Comac ARJ21		C21		
Comac ARJ21-700	C27	C21	2J	AJ27
Convair 240 / 440 / 580 *Passenger*		CVR		
Convair 240 *Passenger*	CV2	CVR	2P	CVLP
Convair 440 Metropolitan *Passenger*	CV4	CVR	2P	CVLP
Convair 580 *Passenger*	CV5	CVR	2T	CVLT

ZZZZ ICAO code pending
* Multiple ICAO codes

Manufacturer and Aircraft Name/Model	Aircraft Type	Aircraft Group	Category	ICAO Code
Convair 240 / 340 / 440 / 580 / 5800 / 600 / 640 *Freighter*		**CVF**		
Convair 240 *Freighter*	**CVV**	CVF	2P	CVLP
Convair 340 / 440 *Freighter*	**CVX**	CVF	2P	CVLP
Convair 580 / 5800 / 600 / 640 *Freighter*	**CVY**	CVF	2T	CVLT
Curtiss C-46 Commando	**CWC**	CWC	2P	C46
Dassault Falcon		**DFL**		
Dassault Falcon 10 / 100	**DF1**	DFL	2J	FA10
Dassault Falcon 20 / 200	**DF2**	DFL	2J	FA20
Dassault Falcon 50 / 50EX	**DF5**	DFL	3J	FA50
Dassault Falcon 900/900B/900C/900DX/900EX/EASY	**DF9**	DFL	3J	F900
Dassault Falcon 900LX	**D9L**	DFL	3J	F900
Dassault Falcon 7X	**DF7**	DFL	3J	FA7X
Dassault Falcon 2000/2000DX	**D20**	DFL	2J	F2TH
Dassault Falcon 2000EX/EASY/LX	**D2L**	DFL	2J	F2TH
De Havilland (Bombardier) DHC-2 Beaver / Turbo Beaver		**DHB**		
De Havilland (Bombardier) DHC-2 Beaver	**DHP**	DHB	1P	DHC2
De Havilland (Bombardier) DHC-2 Turbo Beaver	**DHR**	DHB	1T	DH2T
De Havilland (Bombardier) DHC-3 Otter / Turbo Otter		**DHO**		
De Havilland (Bombardier) DHC-3 Otter	**DHS**	DHO	1P	DHC3
De Havilland (Bombardier) DHC-3 Turbo Otter	**DHL**	DHO	1T	DH3T
De Havilland (Bombardier) DHC-4 Caribou	**DHC**	DHC	2P	DHC4
De Havilland (Bombardier) DHC-6 Twin Otter	**DHT**	DHT	2T	DHC6
De Havilland (Bombardier) DHC-7 Dash 7	**DH7**	DH7	4T	DHC7
De Havilland (Bombardier) DHC-8 Dash 8		**DH8**		
De Havilland (Bombardier) DHC-8-100 Dash 8 / 8Q	**DH1**	DH8	2T	DH8A
De Havilland (Bombardier) DHC-8-200 Dash 8 / 8Q	**DH2**	DH8	2T	DH8B
De Havilland (Bombardier) DHC-8-300 Dash 8 / 8Q	**DH3**	DH8	2T	DH8C
De Havilland (Bombardier) DHC-8-400 Dash 8Q	**DH4**	DH8	2T	DH8D

ZZZZ ICAO code pending
* Multiple ICAO codes

Manufacturer and Aircraft Name/Model	Aircraft Type	Aircraft Group	Category	ICAO Code
De Havilland (Bombardier) DHC-8 *Freighter*	DHF	000	00	0000
De Havilland (Bombardier) DHC-8-400 Dash 8Q *Freighter*	D4X	DHF	2T	DH8D
Diamond Aircraft DA42 Twin Star	D42	D42	2P	DA42
Eclipse		EAC		
Eclipse 500	EA5	EAC	2J	EA50
Embraer 110 Bandeirante	EMB	EMB	2T	E110
Embraer 120 Brasilia	EM2	EM2	2T	E120
Embraer RJ135 / RJ140 / RJ145		ERJ		
Embraer RJ135 and Legacy 600/650	ER3	ERJ	2J	E135
Embraer RJ140	ERD	ERJ	2J	E135
Embraer RJ145	ER4	ERJ	2J	E145
Embraer 170 / 175 / 190 / 195		EMJ		
Embraer 170	E70	EMJ	2J	E170
Embraer 175	E75	EMJ	2J	E170
Embraer 190	E90	EMJ	2J	E190
Embraer 195 and Legacy 1000	E95	EMJ	2J	E190
Embraer Phenom		EPH		
Embraer EMB-500 Phenom 100	EP1	EPH	2J	E50P
Embraer EMB-505 Phenom 300	EP3	EPH	2J	E55P
Eurocopter (Aerospatiale) SA330 Puma / AS332 Super Puma	APH	APH	H	*
Eurocopter (Aerospatiale) AS350 Ecureuil / AS355 Ecureuil 2	NDE	NDE	H	*
Eurocopter (Aerospatiale) SA365C / SA365N Dauphin 2	NDH	NDH	H	*
Eurocopter (MBB) BO105	MBH	MBH	H	B105

ZZZZ ICAO code pending
* Multiple ICAO codes

Manufacturer and Aircraft Name/Model	Aircraft Type	Aircraft Group	Category	ICAO Code
Eurocopter EC130	EC3	EC3	H	EC30
Eurocopter EC155	EC5	EC5	2T	EC55
Fairchild Dornier 228	D28	D28	2T	D228
Fairchild Dornier 328-100	D38	D38	2T	D328
Fairchild Dornier 328JET	FRJ	FRJ	2J	J328
Fairchild (Swearingen) SA26 / SA226 / SA227 Merlin / Metro / Expediter	SWM	SWM	2T	*
Fairchild (Swearingen) SA226 *Freighter*	SWF	SWF	2T	*
Fairchild Industries FH-227	FK7	FK7	2T	F27
Fokker F27 Friendship / Fairchild Industries F-27	F27	F27	2T	F27
Fokker F28 Fellowship		F28		
Fokker F28 Fellowship 1000	F21	F28	2J	F28
Fokker F28 Fellowship 2000	F22	F28	2J	F28
Fokker F28 Fellowship 3000	F23	F28	2J	F28
Fokker F28 Fellowship 4000	F24	F28	2J	F28
Fokker 50	F50	F50	2T	F50
Fokker 50 *Freighter*	F5F	F5F	2T	F50
Fokker 70	F70	F70	2J	F70
Fokker 100	100	100	2J	F100
Gippsland Aeronautics GA8 Airvan	GA8	GA8	1P	GA8
Gippsland Aeronautics N22B / N24A Nomad	CD2	CD2	2T	NOMA
Grumman G-21 Goose (Amphibian)	GRG	GRG	2P	G21

ZZZZ ICAO code pending
* Multiple ICAO codes

Manufacturer and Aircraft Name/Model	Aircraft Type	Aircraft Group	Category	ICAO Code
Grumman G-73 Turbo Mallard (Amphibian)	GRM	GRM	2T	G73T
Gulfstream Aerospace		GRJ		
Gulfstream Aerospace G-100/G-150 (Astra SPX)	GR1	GRJ	2J	G150
Gulfstream Aerospace G-200 (Galaxy)	GR2	GRJ	2J	GALX
Gulfstream Aerospace G-1159 Gulfstream II	GJ2	GRJ	2T	GLF2
Gulfstream Aerospace G-1159 Gulfstream IIB	G2B	GRJ	2T	GLF2
Gulfstream Aerospace G-1159 Gulfstream IISP	G2S	GRJ	2T	GLF2
Gulfstream Aerospace G-1159A Gulfstream III	GJ3	GRJ	2T	GLF3
Gulfstream Aerospace G-280	GR3	GRJ	2J	G280
Gulfstream Aerospace IV (G300/G350/G400/G450/IVSP)	GJ4	GRJ	2J	GLF4
Gulfstream Aerospace V (G500/G550)	GJ5	GRJ	2J	GLF5
Gulfstream Aerospace G650	GJ6	GRJ	2J	GLF6
Hawker Beechcraft		HBA		
Hawker 200	H20	HBA	2J	ZZZZ
Hawker 390 Premier 1/1A	PR1	HBA	2J	PRM1
Hawker 400 Beechjet/400A/400XP/400T	BE4	HBA	2J	BE40
Hawker 750/800/800XP/800SP	H25	HBA	2J	H25B
Hawker 850XP/900	H28	HBA	2J	H25B
Hawker 900XP	H29	HBA	2J	H25B
Hawker 1000	H21	HBA	2J	H25C
Hawker 4000	H24	HBA	2J	HA4T
Hawker Beechcraft (Light aircraft)		BEC		
Hawker Beechcraft (Light aircraft-single piston engine)	BEP	BEC	1P	*
Hawker Beechcraft (Light aircraft-twin piston engines)	BE2	BEC	2P	*
Hawker Beechcraft (Light aircraft-twin turboprop engines)	BET	BEC	2T	*
Hawker Beechcraft 1900 Airliner		BE1		
Hawker Beechcraft 1900C Airliner	BES	BE1	2T	B190
Hawker Beechcraft 1900D Airliner	BEH	BE1	2T	B190
Hawker Beechcraft 1900 *Freighter*	BEF	BEF	2T	B190
Hawker Beechcraft C99 Airliner	BE9	BE9	2T	BE99

ZZZZ ICAO code pending
* Multiple ICAO codes

Manufacturer and Aircraft Name/Model	Aircraft Type	Aircraft Group	Category	ICAO Code
Hawker Beechcraft (Hawker Siddeley / BAE Systems 125)	H25	H25	2J	*
Harbin Yunshuji Y12	YN2	YN2	2T	Y12
Helio H-250 Courier / H-295 / 395 Super Courier	HEC	HEC	1P	COUR
Ilyushin Il-18	IL8	IL8	4T	IL18
Ilyushin Il-62	IL6	IL6	4J	IL62
Ilyushin Il-76	IL7	IL7	4J	IL76
Ilyushin Il-86	ILW	ILW	4J	IL86
Ilyushin Il-96 *Passenger*	IL9	IL9	4J	IL96
Ilyushin Il-96 *Freighter*	I9F	I9F	4J	IL96
Ilyushin Il-114	I14	I14	2T	I114
Israel Aerospace Industries 1124 Westwind	WWP	WWP	2J	WW24
Junkers Ju 52/3m	JU5	JU5	3P	JU52
Learjet	LRJ	LRJ	2J	*
Light Jet Aircraft	LJA	LJA	2J	ZZZZ
Lockheed Martin L-182 / L-282 / L-382 (L-100) Hercules	LOH	LOH	4T	C130
Lockheed Martin L-188 Electra	LOE	LOE	4T	L188
Lockheed Martin L-188 Electra *Freighter*	LOF	LOF	4T	L188

ZZZZ ICAO code pending
* Multiple ICAO codes

Manufacturer and Aircraft Name/Model	Aircraft Type	Aircraft Group	Category	ICAO Code
Lockheed Martin L-1011 TriStar *Passenger*		**L10**		
Lockheed Martin L-1011 TriStar 1 / 50 / 100 / 150 / 200 / 250 *Passenger*	**L11**	L10	3J	L101
Lockheed Martin L-1011 TriStar 500 *Passenger*	**L15**	L10	3J	L101
Lockheed Martin L-1011 TriStar *Freighter*	**L1F**	L1F	3J	L101
MD Helicopters Inc MD 900 Explorer	**MD9**	MD9	H	EXPL
Mil Mi-8 / Mi-17 / Mi-171 / Mi-172	**MIH**	MIH	H	MI8
Mitsubishi Aircraft Corporation MU-2	**MU2**	MU2	2T	MU2
NAMC YS-11	**YS1**	YS1	2T	YS11
Piaggio Aero P180 Avanti II	**P18**	P18	2T	P180
Pilatus PC-6 Turbo Porter	**PL6**	PL6	1T	PC6T
Pilatus PC-12	**PL2**	PL2	1T	PC12
Piper (Light aircraft)		**PAG**		
Piper (Light aircraft-single piston engine)	**PA1**	PAG	1P	*
Piper (Light aircraft-twin piston engines)	**PA2**	PAG	2P	*
Piper (Light aircraft-twin turboprop engines)	**PAT**	PAG	2T	*
Saab 340	**SF3**	SF3	2T	SF34
Saab 340B	**SFB**	SF3	2T	SF34
Saab 340 *Freighter*	**SFF**	SFF	2T	SF34
Saab 2000	**S20**	S20	2T	SB20
Shaanxi Y-8	**SY8**	SY8	4T	AN12
Shorts Skyvan (SC-7)	**SHS**	SHS	2T	SC7
Shorts 330 (SD3-30)	**SH3**	SH3	2T	SH33

ZZZZ ICAO code pending
* Multiple ICAO codes

Manufacturer and Aircraft Name/Model	Aircraft Type	Aircraft Group	Category	ICAO Code
Shorts 360 (SD3-60)	SH6	SH6	2T	SH36
Sikorsky S-58T	S58	S58	H	S58T
Sikorsky S-61	S61	S61	H	S61
Sikorsky S-76	S76	S76	H	S76
SOCATA TBM-700	TBM	TBM	1T	TBM7
Sukhoi Superjet 100		SU1		
Sukhoi Superjet 100-75	SU7	SU1	2J	ZZZZ
Sukhoi Superjet 100-95	SU9	SU1	2J	SU95
Surface Equipment-Bus	BUS	BUS	S	0000
Surface Equipment-Hovercraft	HOV	HOV	S	0000
Surface Equipment-Launch / Boat	LCH	LCH	S	0000
Surface Equipment-Limousine	LMO	LMO	S	0000
Surface Equipment-Road Feeder Service (Truck)	RFS	RFS	S	0000
Surface Equipment-Train Standard Service	TRN	TRN	S	0000
Surface Equipment-Train High Speed Train	TRS	TRN	S	0000
Tupolev Tu-134	TU3	TU3	2J	T134
Tupolev Tu-154	TU5	TU5	3J	T154
Tupolev Tu-204 / Tu-214	T20	T20	2J	T204
Tupolev Tu-204 *Freighter*	T2F	T2F	2J	T204
Tupolev Tu-334	T34	T34	2J	T334

ZZZZ ICAO code pending
* Multiple ICAO codes

Manufacturer and Aircraft Name/Model	Aircraft Type	Aircraft Group	Category	ICAO Code
Twin Commander Aircraft / Turbo Commander / Jetprop Commander		ACD		
Twin Commander Aircraft	ACP	ACD	2P	*
Twin (Aero) Turbo Commander / Jetprop Commander	ACT	ACD	2T	*
Vulcanair (Partenavia) P.68	PN6	PN6	2P	P68
Xian Yunshuji Y7	YN7	YN7	2T	AN24
△ **Xian Yunshuji MA-60/MA600**	MA6	MA6	2T	AN24
Yakovlev Yak-40	YK4	YK4	3J	YK40
Yakovlev Yak-42 / Yak-142	YK2	YK2	3J	YK42

ZZZZ ICAO code pending
* Multiple ICAO codes

Decoding List

Aircraft Type	Aircraft Group	Manufacturer and Aircraft Name/Model	Category	ICAO Code
100	100	Fokker 100	2J	F100
141	146	BAE Systems 146-100 *Passenger*	4J	B461
142	146	BAE Systems 146-200 *Passenger*	4J	B462
143	146	BAE Systems 146-300 *Passenger*	4J	B463
—	**146**	BAE Systems 146 *Passenger*		
—	**14F**	BAE Systems 146 *Freighter*		
14X	14F	BAE Systems 146-100 *Freighter*	4J	B461
14Y	14F	BAE Systems 146-200 *Freighter*	4J	B462
14Z	14F	BAE Systems 146-300 *Freighter*	4J	B463
—	**310**	Airbus A310 *Passenger*		
312	310	Airbus A310-200 *Passenger*	2J	A310
313	310	Airbus A310-300 *Passenger*	2J	A310
318	32S	Airbus A318	2J	A318
319	32S	Airbus A319	2J	A319
—	**31F**	Airbus A310 *Freighter*		
31X	31F	Airbus A310-200 *Freighter*	2J	A310
31Y	31F	Airbus A310-300 *Freighter*	2J	A310
32A	32S	Airbus A320 (sharklets)	2J	A320
32B	32S	Airbus A321 (sharklets)	2J	A321
32C	32S	Airbus A318 (sharklets)	2J	A318
32D	32S	Airbus A319 (sharklets)	2J	A319
32F	32F	Airbus A320 *Freighter*	2J	A320
32X	32X	Airbus A321 *Freighter*	2J	A321
320	32S	Airbus A320	2J	A320
321	32S	Airbus A321	2J	A321
—	**32S**	Airbus A318 / A319 / A320 / A321		
—	**330**	Airbus A330		
332	330	Airbus A330-200	2J	A332
333	330	Airbus A330-300	2J	A333
—	**33F**	Airbus A330 *Freighter*		
33X	33F	Airbus A330-200 *Freighter*	2J	A332
—	**340**	Airbus A340		
342	340	Airbus A340-200	4J	A342
343	340	Airbus A340-300	4J	A343
345	340	Airbus A340-500	4J	A345
346	340	Airbus A340-600	4J	A346
—	**350**	Airbus A350		

ZZZZ ICAO code pending
* Multiple ICAO codes

Aircraft Type	Aircraft Group	Manufacturer and Aircraft Name/Model	Category	ICAO Code
358	350	Airbus A350-800	2J	ZZZZ
359	350	Airbus A350-900	2J	ZZZZ
351	350	Airbus A350-1000	2J	ZZZZ
—	**380**	Airbus A380 *Passenger*		
388	380	Airbus A380-800 *Passenger*	4J	A388
38F	38F	Airbus A380-800F *Freighter*	4J	A388
703	707	Boeing 707-320B / 320C *Passenger*	4J	B703
—	**707**	Boeing 707 / 720 *Passenger*		
70F	70F	Boeing 707-320B / 320C *Freighter*	4J	B703
70M	70M	Boeing 707-320B / 320C *Mixed Configuration*	4J	B703
717	717	Boeing 717-200	2J	B712
721	727	Boeing 727-100 *Passenger*	3J	B721
722	727	Boeing 727-200 *Passenger*	3J	B722
—	**727**	Boeing 727 *Passenger*		
72B	72M	Boeing 727-100 *Mixed Configuration*	3J	B721
72C	72M	Boeing 727-200 *Mixed Configuration*	3J	B722
—	**72F**	Boeing 727 *Freighter*		
—	**72M**	Boeing 727 *Mixed Configuration*		
72W	727	Boeing 727-200 (winglets) *Passenger*	3J	B722
72X	72F	Boeing 727-100 *Freighter*	3J	B721
72Y	72F	Boeing 727-200 *Freighter*	3J	B722
731	737	Boeing 737-100 *Passenger*	2J	B731
732	737	Boeing 737-200 *Passenger*	2J	B732
733	737	Boeing 737-300 *Passenger*	2J	B733
734	737	Boeing 737-400 *Passenger*	2J	B734
735	737	Boeing 737-500 *Passenger*	2J	B735
736	737	Boeing 737-600 *Passenger*	2J	B736
—	**737**	Boeing 737 *Passenger*		
738	737	Boeing 737-800 *Passenger*	2J	B738
739	737	Boeing 737-900 *Passenger*	2J	B739
73C	737	Boeing 737-300 (winglets) *Passenger*	2J	B733
73E	737	Boeing 737-500 (winglets) *Passenger*	2J	B735
—	**73F**	Boeing 737 *Freighter*		
73G	737	Boeing 737-700 *Passenger*	2J	B737
73H	737	Boeing 737-800 (winglets) *Passenger*/BBJ2	2J	B738
73J	737	Boeing 737-900 (winglets) *Passenger*/BBJ3	2J	B739
73L	73M	Boeing 737-200 *Mixed Configuration*	2J	B732
—	**73M**	Boeing 737 *Mixed Configuration*		

ZZZZ ICAO code pending
* Multiple ICAO codes

Aircraft Type	Aircraft Group	Manufacturer and Aircraft Name/Model	Category	ICAO Code
73N	73M	Boeing 737-300 *Mixed Configuration*	2J	B733
73P	73F	Boeing 737-400 *Freighter*	2J	B734
73Q	73M	Boeing 737-400 *Mixed Configuration*	2J	B734
73R	73M	Boeing 737-700 *Mixed Configuration*/BBJC	2J	B737
73S	73F	Boeing 737-700 *Freighter*	2J	B737
73W	737	Boeing 737-700 (winglets) *Passenger*/BBJ1	2J	B737
73X	73F	Boeing 737-200 *Freighter*	2J	B732
73Y	73F	Boeing 737-300 *Freighter*	2J	B733
741	747	Boeing 747-100 *Passenger*	4J	B741
742	747	Boeing 747-200 *Passenger*	4J	B742
743	747	Boeing 747-300 / 747-100/200 SUD *Passenger*	4J	B743
744	747	Boeing 747-400 *Passenger*	4J	B744
—	**747**	Boeing 747 *Passenger*		
74B	74F	Boeing 747-400 Swingtail *Freighter*	4J	B744
74C	74M	Boeing 747-200 *Mixed Configuration*	4J	B742
74D	74M	Boeing 747-300 / 747-200 SUD *Mixed Configuration*	4J	B743
74E	74M	Boeing 747-400 *Mixed Configuration*	4J	B744
—	**74F**	Boeing 747 *Freighter*		
74H	747	Boeing 747-8 *Passenger*	4J	B748
74J	747	Boeing 747-400 (Domestic) *Passenger*	4J	B74D
74L	747	Boeing 747SP *Passenger*	4J	B74S
—	**74M**	Boeing 747 *Mixed Configuration*		
74N	74F	Boeing 747-8F *Freighter*	4J	B748
74R	747	Boeing 747SR *Passenger*	4J	B74R
74T	74F	Boeing 747-100 *Freighter*	4J	B741
74U	74F	Boeing 747-300 / 747-200 SUD *Freighter*	4J	B743
74V	74F	Boeing 747SR *Freighter*	4J	B74R
74X	74F	Boeing 747-200 *Freighter*	4J	B742
74Y	74F	Boeing 747-400 *Freighter*	4J	B744
752	757	Boeing 757-200 *Passenger*	2J	B752
753	757	Boeing 757-300 *Passenger*	2J	B753
—	**757**	Boeing 757 *Passenger*		
75F	75F	Boeing 757-200 *Freighter*	2J	B752
75M	75M	Boeing 757-200 *Mixed Configuration*	2J	B752
75T	757	Boeing 757-300 (winglets) *Passenger*	2J	B753
75W	757	Boeing 757-200 (winglets) *Passenger*	2J	B752
762	767	Boeing 767-200 *Passenger*	2J	B762
763	767	Boeing 767-300 *Passenger*	2J	B763

ZZZZ ICAO code pending
* Multiple ICAO codes

Aircraft Type	Aircraft Group	Manufacturer and Aircraft Name/Model	Category	ICAO Code
764	767	Boeing 767-400 *Passenger*	2J	B764
—	**767**	Boeing 767 *Passenger*		
—	**76F**	Boeing 767 *Freighter*		
76V	76F	Boeing 767-300 (winglets) *Freighter*	2J	B763
76W	767	Boeing 767-300 (winglets) *Passenger*	2J	B763
76X	76F	Boeing 767-200 *Freighter*	2J	B762
76Y	76F	Boeing 767-300 *Freighter*	2J	B763
772	777	Boeing 777-200 / 200ER	2J	B77L
773	777	Boeing 777-300	2J	B773
—	**777**	Boeing 777		
77L	777	Boeing 777-200LR	2J	B772
77W	777	Boeing 777-300ER	2J	B77W
—	**77F**	Boeing 777 *Freighter*		
77X	77F	Boeing 777-200F *Freighter*	2J	B772
—	**787**	Boeing 787		
783	787	Boeing 787-3	2J	B783
788	787	Boeing 787-8	2J	B788
789	787	Boeing 787-9	2J	B789
A22	A22	Antonov An-22	4T	AN22
A26	AN6	Antonov An-26	2T	AN26
A28	A28	Antonov An-28 / PZL Mielec M-28 Skytruck	2T	AN28
A30	AN6	Antonov An-30	2T	AN30
A32	AN6	Antonov An-32	2T	AN32
A38	A38	Antonov An-38	2T	AN38
A40	A40	Antonov An-140	2T	A140
A58	A58	Antonov An-158	2J	ZZZZ
A4F	A4F	Antonov An-124 Ruslan	4J	A124
A5F	A5F	Antonov An-225	6J	A225
A81	A81	Antonov AN148-100	2J	A148
—	**AB3**	Airbus A300 *Passenger*		
AB4	AB3	Airbus A300B2 / A300B4 *Passenger*	2J	A30B
AB6	AB3	Airbus A300-600 *Passenger*	2J	A306
ABB	ABF	Airbus A300-600ST Beluga *Freighter*	2J	A3ST
—	**ABF**	Airbus A300 *Freighter*		
ABX	ABF	Airbus A300B4 / A300C4 / A300F4 *Freighter*	2J	A30B
ABY	ABF	Airbus A300-600 *Freighter*	2J	A306
—	**ACD**	Twin Commander Aircraft / Turbo Commander / Jetprop Commander		
ACP	ACD	Twin Commander Aircraft	2P	*

ZZZZ ICAO code pending
* Multiple ICAO codes

Aircraft Type	Aircraft Group	Manufacturer and Aircraft Name/Model	Category	ICAO Code
ACT	ACD	Twin (Aero) Turbo Commander / Jetprop Commander	2T	*
AGH	AGH	AgustaWestland A109	H	A109
AN4	AN4	Antonov An-24	2T	AN24
—	AN6	Antonov An-26 / An-30 / An-32		
AN7	AN7	Antonov An-72 / An-74	2J	AN72
ANF	ANF	Antonov An-12	4T	AN12
APF	APF	BAE Systems ATP *Freighter*	2T	ZZZZ
APH	APH	Eurocopter (Aerospatiale) SA330 Puma / AS332 Super Puma	H	*
AR1	ARJ	Avro RJ100	4J	RJ1H
AR7	ARJ	Avro RJ70	4J	RJ70
AR8	ARJ	Avro RJ85	4J	RJ85
—	ARJ	Avro RJ70 / RJ85 / RJ100		
AT4	ATR	ATR 42-300 / 320	2T	AT43 ⊗
AT7	ATR	ATR 72	2T	AT72 ⊗
ATF	ATF	ATR 72 *Freighter*	2T	AT72
ATP	ATP	BAE Systems ATP	2T	ATP
—	ATR	ATR 42 / ATR 72		
AWH	AWH	AgustaWestland AW139	2T	A139
ATZ	ATZ	ATR 42 *Freighter*	2T	*
—	B11	BAE Systems (BAC) One-Eleven		
B12	B11	BAE Systems (BAC) One-Eleven 200	2J	BA11
B13	B11	BAE Systems (BAC) One-Eleven 300	2J	BA11
B14	B11	BAE Systems (BAC) One-Eleven 400 / 475	2J	BA11
B15	B11	BAE Systems (BAC) One-Eleven 500 / RomBac One-Eleven 560	2J	BA11
B72	707	Boeing 720-020B	4J	B720
—	BE1	Hawker Beechcraft 1900 Airliner		
BE2	BEC	Hawker Beechcraft (Light aircraft-twin piston engines)	2P	*
BE4	HBA	Hawker 400 Beechjet/400A/400XP/400T	2J	BE40
BE9	BE9	Hawker Beechcraft C99 Airliner	2T	BE99
—	BEC	Hawker Beechcraft (Light aircraft)		
BEF	BEF	Hawker Beechcraft 1900 *Freighter*	2T	B190
BEH	BE1	Hawker Beechcraft 1900D Airliner	2T	B190
BEP	BEC	Hawker Beechcraft (Light aircraft-single piston engine)	1P	*
BES	BE1	Hawker Beechcraft 1900C Airliner	2T	B190

ZZZZ ICAO code pending
* Multiple ICAO codes

Aircraft Type	Aircraft Group	Manufacturer and Aircraft Name/Model	Category	ICAO Code
BET	BEC	Hawker Beechcraft (Light aircraft-twin turboprop engines)	2T	*
BH2	BH2	Bell (Helicopters)	H	*
BNI	BNI	Britten-Norman BN-2A / BN-2B Islander	2P	BN2P
BNT	BNT	Britten-Norman BN-2A Mk.III Trislander	3P	TRIS
BTA	BTA	Business Turbo-Prop Aircraft	2T	ZZZZ
BUS	BUS	Surface Equipment-Bus	S	0000
—	C21	Comac ARJ21		
C27	C21	Comac ARJ21-700	2J	AJ27
CCJ	CCJ	Canadair (Bombardier) CL-600 / 601 / 604 / 605 Challenger	2J	CL60
CCX	CCX	Bombardier BD-700 Global Express/Global 500	2J	GLEX
CD2	CD2	Gippsland Aeronautics N22B / N24A Nomad	2T	NOMA
CJL	CNJ	Cessna 560 XL/XLS Citation	2J	*
CJM	CNJ	Cessna 510 Mustang Citation	2J	C510
CJ1	CNJ	Cessna 500 / 501 / 525 Citation	2J	*
CJ2	CNJ	Cessna 550 / 551 / 552 Citation	2J	*
CJ5	CNJ	Cessna 560 Citation	2J	*
CJ6	CNJ	Cessna 650 Citation	2J	*
CJ8	CNJ	Cessna 680 Citation	2J	*
CL3	CL3	Bombardier Challenger 300	2J	CL30
CN1	CNA	Cessna (Light aircraft-single piston engine)	1P	*
CN2	CNA	Cessna (Light aircraft-twin piston engines)	2P	*
CN7	CN7	Cessna 750 Citation X	2J	C750
—	CNA	Cessna (Light aircraft)		
CNC	CNA	Cessna (Light aircraft-single turboprop engine)	1T	*
CNF	CNF	Cessna 208B *Freighter*	2T	*
CNJ	CNJ	Cessna Citation	2J	*
CNT	CNA	Cessna (Light aircraft-twin turboprop engines)	2T	*
CR1	CRJ	Canadair (Bombardier) Regional Jet 100	2J	CRJ1
CR2	CRJ	Canadair (Bombardier) Regional Jet 200	2J	CRJ2
CR7	CRJ	Canadair (Bombardier) Regional Jet 700 and Challenger 870	2J	CRJ7
CR9	CRJ	Canadair (Bombardier) Regional Jet 900 and Challenger 890	2J	CRJ9
CRA	CRJ	Canadair (Bombardier) Regional Jet 705	2J	CRJ9
CRF	CRF	Canadair (Bombardier) Regional Jet *Freighter*	2J	ZZZZ
—	CRJ	Canadair (Bombardier) Regional Jet		
CRK	CRJ	Canadair (Bombardier) Regional Jet 1000	2J	CRJX
CS1	CSB	Bombardier CS100	2J	ZZZZ

ZZZZ ICAO code pending
* Multiple ICAO codes

Aircraft Type	Aircraft Group	Manufacturer and Aircraft Name/Model	Category	ICAO Code
CS2	CS2	CASA / IAe 212 Aviocar	2T	C212
CS3	CSB	Bombardier CS300	2J	ZZZZ
CS5	CS5	CASA / IAe CN-235	2T	CN35
CS9	CS9	CASA / IAe C-295	2T	C295
—	CSB	Bombardier C Series		
CV2	CVR	Convair 240 *Passenger*	2P	CVLP
CV4	CVR	Convair 440 Metropolitan *Passenger*	2P	CVLP
CV5	CVR	Convair 580 *Passenger*	2T	CVLT
—	CVF	Convair 240 / 340 / 440 / 580 / 5800 / 600 / 640 *Freighter*		
—	CVR	Convair 240 / 440 / 580 *Passenger*		
CVV	CVF	Convair 240 *Freighter*	2P	CVLP
CVX	CVF	Convair 340 / 440 *Freighter*	2P	CVLP
CVY	CVF	Convair 580 / 5800 / 600 / 640 *Freighter*	2T	CVLT
CWC	CWC	Curtiss C-46 Commando	2P	C46
—	D10	Boeing (Douglas) DC-10 *Passenger*		
D11	D10	Boeing (Douglas) DC-10-10 / 15 *Passenger*	3J	DC10
D20	DFL	Dassault Falcon 2000/2000DX	2J	F2TH
D1C	D10	Boeing (Douglas) DC-10-30 / 40 *Passenger*	3J	DC10
—	D1F	Boeing (Douglas) DC-10 *Freighter*		
D1M	D1M	Boeing (Douglas) DC-10-30 *Mixed Configuration*	3J	DC10
D1X	D1F	Boeing (Douglas) DC-10-10 *Freighter*	3J	DC10
D1Y	D1F	Boeing (Douglas) DC-10-30 / 40 *Freighter*	3J	DC10
D28	D28	Fairchild Dornier 228	2T	D228
D2L	DFL	Dassault Falcon 2000EX/EASY/LX	2J	F2TH
D38	D38	Fairchild Dornier 328-100	2T	D328
D42	D42	Diamond Aircraft DA42 Twin Star	2P	DA42
D3F	D3F	Boeing (Douglas) DC-3 *Freighter*	2P	DC3
D4X	DHF	De Havilland (Bombardier) DHC-8-400 Dash 8Q *Freighter*	2T	DH8D
D6F	D6F	Boeing (Douglas) DC-6A / DC-6B / DC-6C *Freighter*	4P	DC6
—	D8F	Boeing (Douglas) DC-8 *Freighter*		
D8L	DC8	Boeing (Douglas) DC-8-62 *Passenger*	4J	DC86
D8M	D8M	Boeing (Douglas) DC-8-62 *Mixed Configuration*	4J	DC86
D8Q	DC8	Boeing (Douglas) DC-8-72 *Passenger*	4J	DC87
D8T	D8F	Boeing (Douglas) DC-8-50 *Freighter*	4J	DC85
D8X	D8F	Boeing (Douglas) DC-8-61 / 62 / 63 *Freighter*	4J	DC86
D8Y	D8F	Boeing (Douglas) DC-8-71 / 72 / 73 *Freighter*	4J	DC87
D91	DC9	Boeing (Douglas) DC-9-10 *Passenger*	2J	DC91

ZZZZ ICAO code pending
* Multiple ICAO codes

Aircraft Type	Aircraft Group	Manufacturer and Aircraft Name/Model	Category	ICAO Code
D92	DC9	Boeing (Douglas) DC-9-20 *Passenger*	2J	DC92
D93	DC9	Boeing (Douglas) DC-9-30 *Passenger*	2J	DC93
D94	DC9	Boeing (Douglas) DC-9-40 *Passenger*	2J	DC94
D95	DC9	Boeing (Douglas) DC-9-50 *Passenger*	2J	DC95
D9C	D9F	Boeing (Douglas) DC-9-30 *Freighter*	2J	DC93
D9D	D9F	Boeing (Douglas) DC-9-40 *Freighter*	2J	DC94
—	**D9F**	Boeing (Douglas) DC-9 *Freighter*		
D9L	DFL	Dassault Falcon 900LX	3J	F900
D9X	D9F	Boeing (Douglas) DC-9-10 *Freighter*	2J	DC91
DC3	DC3	Boeing (Douglas) DC-3 *Passenger*	2P	DC3
DC4	DC4	Boeing (Douglas) DC-4	4P	DC4
DC6	DC6	Boeing (Douglas) DC-6B *Passenger*	4P	DC6
—	**DC8**	Boeing (Douglas) DC-8 *Passenger*		
—	**DC9**	Boeing (Douglas) DC-9 *Passenger*		
DF1	DFL	Dassault Falcon 10 / 100	2J	FA10
DF2	DFL	Dassault Falcon 20 / 200	2J	FA20
DF5	DFL	Dassault Falcon 50 / 50EX	3J	FA50
DF7	DFL	Dassault Falcon 7X	3J	FA7X
DF9	DFL	Dassault Falcon 900/900B/900C/900DX/900EX/EASY	3J	F900
—	**DFL**	Dassault Falcon		
DH1	DH8	De Havilland (Bombardier) DHC-8-100 Dash 8 / 8Q	2T	DH8A
DH2	DH8	De Havilland (Bombardier) DHC-8-200 Dash 8 / 8Q	2T	DH8B
DH3	DH8	De Havilland (Bombardier) DHC-8-300 Dash 8 / 8Q	2T	DH8C
DH4	DH8	De Havilland (Bombardier) DHC-8-400 Dash 8Q	2T	DH8D
DH7	DH7	De Havilland (Bombardier) DHC-7 Dash 7	4T	DHC7
—	**DH8**	De Havilland (Bombardier) DHC-8 Dash 8		
—	**DHB**	De Havilland (Bombardier) DHC-2 Beaver / Turbo Beaver		
DHC	DHC	De Havilland (Bombardier) DHC-4 Caribou	2P	DHC4
DHD	DHD	BAE Systems (De Havilland) 104 Dove	2P	DOVE
DHF	000	De Havilland (Bombardier) DHC-8 *Freighter*	00	0000
DHH	DHH	BAE Systems (De Havilland) 114 Heron	4P	HERN
DHL	DHO	De Havilland (Bombardier) DHC-3 Turbo Otter	1T	DH3T
—	**DHO**	De Havilland (Bombardier) DHC-3 Otter / Turbo Otter		
DHP	DHB	De Havilland (Bombardier) DHC-2 Beaver	1P	DHC2
DHR	DHB	De Havilland (Bombardier) DHC-2 Turbo Beaver	1T	DH2T
DHS	DHO	De Havilland (Bombardier) DHC-3 Otter	1P	DHC3
DHT	DHT	De Havilland (Bombardier) DHC-6 Twin Otter	2T	DHC6
E70	EMJ	Embraer 170	2J	E170

ZZZZ ICAO code pending
* Multiple ICAO codes

Aircraft Type	Aircraft Group	Manufacturer and Aircraft Name/Model	Category	ICAO Code	
EA5	EAC	Eclipse 500	2J	EA50	
E75	EMJ	Embraer 175	2J	E170	
E90	EMJ	Embraer 190	2J	E190	
E95	EMJ	Embraer 195 and Legacy 1000	2J	E190	
—	EAC	Eclipse			
EC3	EC3	Eurocopter EC130	H	EC30	
EC5	EC5	Eurocopter EC155	2T	EC55	□
EM2	EM2	Embraer 120 Brasilia	2T	E120	
EMB	EMB	Embraer 110 Bandeirante	2T	E110	
—	EMJ	Embraer 170 / 175 / 190 / 195			
—	EPH	Embraer Phenom			
EP1	EPH	Embraer EMB-500 Phenom 100	2J	E50P	
EP3	EPH	Embraer EMB-505 Phenom 300	2J	E55P	
ER3	ERJ	Embraer RJ135 and Legacy 600/650	2J	E135	
ER4	ERJ	Embraer RJ145	2J	E145	
ERD	ERJ	Embraer RJ140	2J	E135	
—	ERJ	Embraer RJ135 / RJ140 / RJ145			
F21	F28	Fokker F28 Fellowship 1000	2J	F28	
F22	F28	Fokker F28 Fellowship 2000	2J	F28	
F23	F28	Fokker F28 Fellowship 3000	2J	F28	
F24	F28	Fokker F28 Fellowship 4000	2J	F28	
F27	F27	Fokker F27 Friendship / Fairchild Industries F-27	2T	F27	
—	F28	Fokker F28 Fellowship			
F50	F50	Fokker 50	2T	F50	
F5F	F5F	Fokker 50 *Freighter*	2T	F50	
F70	F70	Fokker 70	2J	F70	
FK7	FK7	Fairchild Industries FH-227	2T	F27	
FRJ	FRJ	Fairchild Dornier 328JET	2J	J328	
G2B	GRJ	Gulfstream Aerospace G-1159 Gulfstream IIB	2T	GLF2	□
G2S	GRJ	Gulfstream Aerospace G-1159 Gulfstream IISP	2T	GLF2	□
GA8	GA8	Gippsland Aeronautics GA8 Airvan	1P	GA8	
GJ2	GRJ	Gulfstream Aerospace G-1159 Gulfstream II	2T	GLF2	□
GJ3	GRJ	Gulfstream Aerospace G-1159A Gulfstream III	2T	GLF3	□
GJ4	GRJ	Gulfstream Aerospace IV (G300/G350/G400/G450/IVSP)	2J	GLF4	△
GJ5	GRJ	Gulfstream Aerospace V (G500/G550)	2J	GLF5	△
GJ6	GRJ	Gulfstream Aerospace G650	2J	GLF6	△
GR1	GRJ	Gulfstream Aerospace G-100/G-150 (Astra SPX)	2J	G150	□
GR2	GRJ	Gulfstream Aerospace G-200 (Galaxy)	2J	GALX	

ZZZZ ICAO code pending
* Multiple ICAO codes

Aircraft Type	Aircraft Group	Manufacturer and Aircraft Name/Model	Category	ICAO Code
△ GR3	GRJ	Gulfstream Aerospace G-280	2J	G280
—	GRJ	Gulfstream Aerospace		
GRG	GRG	Grumman G-21 Goose (Amphibian)	2P	G21
GRM	GRM	Grumman G-73 Turbo Mallard (Amphibian)	2T	G73T
H20	HBA	Hawker 200	2J	ZZZZ
H21	HBA	Hawker 1000	2J	H25C
H24	HBA	Hawker 4000	2J	HA4T
H25	H25	Hawker Beechcraft (Hawker Siddeley / BAE Systems 125)	2J	*
H25	HBA	Hawker 750/800/800XP/800SP	2J	H25B
H28	HBA	Hawker 850XP/900	2J	H25B
H29	HBA	Hawker 900XP	2J	H25B
—	HBA	Hawker Beechcraft		
HEC	HEC	Helio H-250 Courier / H-295 / 395 Super Courier	1P	COUR
HOV	HOV	Surface Equipment-Hovercraft	S	0000
HS7	HS7	BAE Systems (Hawker Siddeley) 748 / Andover	2T	A748
I14	I14	Ilyushin Il-114	2T	I114
I9F	I9F	Ilyushin Il-96 *Freighter*	4J	IL96
IL6	IL6	Ilyushin Il-62	4J	IL62
IL7	IL7	Ilyushin Il-76	4J	IL76
IL8	IL8	Ilyushin Il-18	4T	IL18
IL9	IL9	Ilyushin Il-96 *Passenger*	4J	IL96
ILW	ILW	Ilyushin Il-86	4J	IL86
J31	JST	BAE Systems Jetstream 31	2T	JS31
J32	JST	BAE Systems Jetstream 32	2T	JS32
J41	JST	BAE Systems Jetstream 41	2T	JS41
—	JST	BAE Systems Jetstream		
JU5	JU5	Junkers Ju 52/3m	3P	JU52
—	L10	Lockheed Martin L-1011 TriStar *Passenger*		
L11	L10	Lockheed Martin L-1011 TriStar 1 / 50 / 100 / 150 / 200 / 250 *Passenger*	3J	L101
L15	L10	Lockheed Martin L-1011 TriStar 500 *Passenger*	3J	L101
L1F	L1F	Lockheed Martin L-1011 TriStar *Freighter*	3J	L101
L4F	L4F	Aircraft Industries (LET) 410 *Freighter*	2T	L410
L4T	L4T	Aircraft Industries (LET) 410	2T	L410
LCH	LCH	Surface Equipment-Launch / Boat	S	0000
LJA	LJA	Light Jet Aircraft	2J	ZZZZ
LMO	LMO	Surface Equipment-Limousine	S	0000
LOE	LOE	Lockheed Martin L-188 Electra	4T	L188

ZZZZ ICAO code pending
* Multiple ICAO codes

Aircraft Type	Aircraft Group	Manufacturer and Aircraft Name/Model	Category	ICAO Code
L0F	L0F	Lockheed Martin L-188 Electra *Freighter*	4T	L188
L0H	L0H	Lockheed Martin L-182 / L-282 / L-382 (L-100) Hercules	4T	C130
LRJ	LRJ	Learjet	2J	*
M11	M11	Boeing (Douglas) MD-11 *Passenger*	3J	MD11
M1F	M1F	Boeing (Douglas) MD-11 *Freighter*	3J	MD11
M1M	M1M	Boeing (Douglas) MD-11 *Mixed Configuration*	3J	MD11
M2F	M2F	Boeing (Douglas) MD82 *Freighter*	2J	MD82
M3F	M3F	Boeing (Douglas) MD83 *Freighter*	2J	MD83
M8F	M8F	Boeing (Douglas) MD88 *Freighter*	2J	MD88
—	**M80**	Boeing (Douglas) MD-80		
M81	M80	Boeing (Douglas) MD-81	2J	MD81
M82	M80	Boeing (Douglas) MD-82	2J	MD82
M83	M80	Boeing (Douglas) MD-83	2J	MD83
M87	M80	Boeing (Douglas) MD-87	2J	MD87
M88	M80	Boeing (Douglas) MD-88	2J	MD88
M90	M90	Boeing (Douglas) MD-90	2J	MD90
MA6	MA6	Xian Yunshuji MA-60/MA600	2T	AN24 △
MBH	MBH	Eurocopter (MBB) BO105	H	B105
MD9	MD9	MD Helicopters Inc MD 900 Explorer	H	EXPL
MIH	MIH	Mil Mi-8 / Mi-17 / Mi-171 / Mi-172	H	MI8
MU2	MU2	Mitsubishi Aircraft Corporation MU-2	2T	MU2
NDC	NDC	Aerospatiale SN601 Corvette	2J	S601
NDE	NDE	Eurocopter (Aerospatiale) AS350 Ecureuil / AS355 Ecureuil 2	H	*
NDH	NDH	Eurocopter (Aerospatiale) SA365C / SA365N Dauphin 2	H	*
P18	P18	Piaggio Aero P180 Avanti II	2T	P180
PA1	PAG	Piper (Light aircraft-single piston engine)	1P	*
PA2	PAG	Piper (Light aircraft-twin piston engines)	2P	*
—	**PAG**	Piper (Light aircraft)		
PAT	PAG	Piper (Light aircraft-twin turboprop engines)	2T	*
PL2	PL2	Pilatus PC-12	1T	PC12
PL6	PL6	Pilatus PC-6 Turbo Porter	1T	PC6T
PN6	PN6	Vulcanair (Partenavia) P.68	2P	P68
PR1	HBA	Hawker 390 Premier 1/1A	2J	PRM1
RFS	RFS	Surface Equipment-Road Feeder Service (Truck)	S	0000
S20	S20	Saab 2000	2T	SB20
S58	S58	Sikorsky S-58T	H	S58T

ZZZZ ICAO code pending
* Multiple ICAO codes

Aircraft Type	Aircraft Group	Manufacturer and Aircraft Name/Model	Category	ICAO Code
S61	S61	Sikorsky S-61	H	S61
S76	S76	Sikorsky S-76	H	S76
SF3	SF3	Saab 340	2T	SF34
SFB	SF3	Saab 340B	2T	SF34
SFF	SFF	Saab 340 *Freighter*	2T	SF34
SH3	SH3	Shorts 330 (SD3-30)	2T	SH33
SH6	SH6	Shorts 360 (SD3-60)	2T	SH36
SHS	SHS	Shorts Skyvan (SC-7)	2T	SC7
SU7	SU1	Sukhoi Superjet 100-75	2J	ZZZZ
SU9	SU1	Sukhoi Superjet 100-95	2J	SU95
—	SU1	Sukhoi Superjet 100		
SWF	SWF	Fairchild (Swearingen) SA226 *Freighter*	2T	*
SWM	SWM	Fairchild (Swearingen) SA26 / SA226 / SA227 Merlin / Metro / Expediter	2T	*
SY8	SY8	Shaanxi Y-8	4T	AN12
T20	T20	Tupolev Tu-204 / Tu-214	2J	T204
T2F	T2F	Tupolev Tu-204 *Freighter*	2J	T204
T34	T34	Tupolev Tu-334	2J	T334
TRN	TRN	Surface Equipment-Train Standard Service	S	0000
TRS	TRN	Surface Equipment-Train High Speed Train	S	0000
TBM	TBM	SOCATA TBM-700	1T	TBM7
TU3	TU3	Tupolev Tu-134	2J	T134
TU5	TU5	Tupolev Tu-154	3J	T154
WWP	WWP	Israel Aerospace Industries 1124 Westwind	2J	WW24
YK2	YK2	Yakovlev Yak-42 / Yak-142	3J	YK42
YK4	YK4	Yakovlev Yak-40	3J	YK40
YN2	YN2	Harbin Yunshuji Y12	2T	Y12
YN7	YN7	Xian Yunshuji Y7	2T	AN24
YS1	YS1	NAMC YS-11	2T	YS11

ZZZZ ICAO code pending
* Multiple ICAO codes

APPENDIX B
MEAL SERVICE CODES

Code	Meaning
B	Breakfast
C	Alcoholic Beverages—Complimentary
D	Dinner
F	Food for Purchase
G	Food and Beverages for Purchase
H	Hot Meal
K	Continental Breakfast
L	Lunch
M	Meal (to be used as a generalization if no specific meal is intended)
N	No Meal Service
O	Cold Meal
P	Alcoholic Beverages for Purchase
R	Refreshments—Complimentary
S	Snack or Brunch
V	Refreshments for Purchase

APPENDIX C
SERVICE TYPES

Service Type Code	Application	Type of Operation	Service Type Description
J	Scheduled	Passenger	Normal Service
S	Scheduled	Passenger	Shuttle Mode
U	Scheduled	Passenger	Service operated by Surface Vehicle
F	Scheduled	Cargo/Mail	Loose Loaded cargo and/or preloaded devices
V	Scheduled	Cargo/Mail	Service operated by Surface Vehicle
M	Scheduled	Cargo/Mail	Mail only
Q	Scheduled	Passenger/Cargo	Passenger/Cargo in Cabin (mixed configuration aircraft)
G	Additional Flights	Passenger	Normal Service
B	Additional Flights	Passenger	Shuttle Mode
A	Additional Flights	Cargo/Mail	Cargo/Mail
R	Additional Flights	Passenger/Cargo	Passenger/Cargo in Cabin (mixed configuration aircraft)
C	Charter	Passenger	Passenger Only
O	Charter	Special Handling	Charter requiring special handling (e.g. Migrants/immigrant Flights)
H	Charter	Cargo/Mail	Cargo and/or Mail
L	Charter	Passenger/Cargo/Mail	Passenger and Cargo and/or Mail
P	Others	Not specific	Non-revenue (Positioning/Ferry/ Delivery/Demo)
T	Others	Not specific	Technical Test
K	Others	Not specific	Training (School/Crew check)
D	Others	Not specific	General Aviation
E	Others	Not specific	Special (FAA/Government)
W	Others	Not specific	Military
X	Others	Not specific	Technical Stop (for Chapter 6 applications only)

Service Type Code	Application	Type of Operation	Service Type Description
I	Others	Not specific	State/Diplomatic/Air Ambulance (Chapter 6 only)
N	Others	Not specific	Business Aviation/Air Taxi

It is presumed that limited amounts of cargo/mail may be accommodated on all passenger services.

The codes Y Z are for special internal company purposes, but they may later be assigned for specific purposes.

APPENDIX D
PASSENGER TERMINAL INDICATORS

Introduction

This Appendix lists airports which have been identified as having more than one PASSENGER terminal or uniquely designated embarkation/disembarkation facility. A one-or two-character code has been assigned to each Passenger Terminal or facility. The intent of airport terminal nomenclature is to more clearly define departure/arrival areas for the benefit of the PASSENGER.

In producing this Appendix, the following criteria have been used to determine which airports qualify as having more than one terminal.

(a) Terminals, including Train/Bus Stations, should be physically separated from one another or be very well defined parts of an airport complex.

(b) If terminals are linked together, each facility must have unique terminal signage, otherwise the various sections are considered to be concourses and not separate terminals.

(c) Terminals should be referred to as such by the authorities of the airport they belong to in their publicity material.

(d) Terminals with different satellites may be included in this Appendix provided they are clearly identified as such by the authorities of the airport they belong to in their publicity material and must have proper signage within the terminal.

Notification of changes to Appendix D will be made available on the SISC webpage of the IATA Slotlink site. In order to maintain sequential control the message heading includes a message reference 'APP/D/number/date' e.g. APP/D/014/28OCT10. The revised information is presented in the same format as in SSIM Appendix D tables.

Assignment Principles

The Passenger Terminal is identified by a one or two character code. In assigning codes, the following principles have been used:

(a) Numeric and alphabetic characters only have been used.

(b) Terminals are identified in many different ways. Whenever possible, codes have been assigned in a standard way:

Code	Meaning
I	International
D	Domestic
E	East
N	North
S	South or Satellite
W	West
A, B, C etc.	A, B, C etc.
1, 2, 3 etc.	1, 2, 3 etc.
Airline Designator	Name of airline
First letter of surname	Name of person

Code	Meaning
L	Budget/Low Cost
U	Shuttle
M	Main, Central etc.
H	Charter
R	Regional/Commuter
Z*	Other

*Z has been assigned to all other terminal identifications such as Marine, Inter-Island etc.

(c) One-character codes are always left justified, e.g. M0 (not 0M) and 10 (not 01).

(d) One-character codes have been assigned to avoid any possible confusion with Airline Designators.

(e) If the terminal used by a flight at an airport included in Appendix D is not pre-determined, or when different terminals apply to different passenger categories, the Passenger Terminal shall be stated as 0 (zero).

(f) In general new terminal codes will be published at least one year prior to the terminal being opened.

Revisions

Requests for additions or amendments to the contents of this Appendix should be addressed to the IATA Management (E-mail: SSIM@iata.org) for consideration by the Schedules Information Standards Committee.

List of Passenger Terminals

This list contains changes notified to airlines attending Slot Conferences up to message △ APP/D/013/16JAN13.

Airport Name	Airport Code	Terminal Name	Terminal Code	Country	Country Code	State
ABU DHABI, International	**AUH**	Terminal 1	1	United Arab Emirates	AE	
		Terminal 1A	1A			
		Terminal 2	2			
		Terminal 3	3			
ACCRA, Kotoka International	**ACC**	Terminal 1	1	Ghana	GH	
		Terminal 2	2			
ADDIS ABBA, Bole	**ADD**	Terminal 1	1	Ethiopia	ET	
		Terminal 2	2			
ADELAIDE	**ADL**	Main Terminal	1	Australia	AU	SA
		General Aviation	R			
AHMEDABAD	**AMD**	Terminal 1	1	India	IN	
		Terminal 2	2			
ALGIERS, Aéroport d'Alger–Houari Boumedine	**ALG**	Terminal 1 International	I	Algeria	DZ	
		Terminal 2 National	D			
		Terminal 3	3			
AMMAN, Queen Alia, International	**AMM**	Terminal 1	1	Jordan	JO	
		Terminal 2	2			
ANCHORAGE, International	**ANC**	North (International)	N	USA	US	AK
		South (Domestic)	S			
ANTALYA	**AYT**	Terminal 1	1	Turkey	TR	
		Terminal 2	2			
		Domestic Terminal	D			
ATLANTA, Hartsfield-Jackson	**ATL**	North Terminal	N	USA	US	GA
		South Terminal	S			
		Maynard H Jackson Jnr International Terminal	I			
AUCKLAND, International	**AKL**	Domestic Terminal	D	New Zealand	NZ	
		International Terminal	I			
BALI, Ngurah Rai International	**DPS**	International Terminal	I	Indonesia	ID	
		Domestic Terminal	D			
BANGKOK, Don Muang	**DMK**	Terminal 1	1	Thailand	TH	
		Terminal 2	2			
		Domestic Terminal	D			

Airport Name	Airport Code	Terminal Name	Terminal Code	Country	Country Code	State
BARCELONA	**BCN**	Terminal 1	1	Spain	ES	
		Terminal 2	2			
BEIJING, Capital	**PEK**	Terminal 1	1	China, Peoples Republic of	CN	
		Terminal 2	2			
		Terminal 3	3			
BELGRADE, Nikola Tesla	**BEG**	Terminal 1	1	Serbia	RS	
		Terminal 2	2			
BODRUM, Milas	**BJV**	International Terminal	I	Turkey	TR	
		Domestic Terminal	D			
BOGOTA, Eldorado	**BOG**	Terminal 1	1	Colombia	CO	
		Terminal 2	2			
BORDEAUX, Merignac	**BOD**	Hall A	A	France	FR	
		Hall B	B			
		billi Terminal	L			
BOSTON, Logan International	**BOS**	Terminal A	A	USA	US	MA
		Terminal B	B			
		Terminal C	C			
		Terminal E	E			
BRISBANE, International	**BNE**	Domestic Terminal	D	Australia	AU	QL
		International Terminal	I			
△ **BUDAPEST, Liszt Ferenc International**	**BUD**	Terminal 2A	2A	Hungary	HU	
		Terminal 2B	2B			
BUENOS AIRES, Ministro Pistarini International	**EZE**	Terminal A	A	Argentina	AR	BA
		Terminal B	B			
		Terminal C	C			
BUSAN, International	**PUS**	International Terminal	I	Korea, Republic of	KR	
		Domestic Terminal	D			
CAIRNS, International	**CNS**	T1 (International)	1	Australia	AU	QL
		T2 (Domestic)	2			
		General Aviation Terminal	R			
CAIRO, International	**CAI**	Terminal 1	1	Egypt	EG	
		Terminal 2	2			
		Terminal 3	3			
CANCUN	**CUN**	Terminal 1	1	Mexico	MX	
		Terminal 2	2			
		Terminal 3	3			

Airport Name	Airport Code	Terminal Name	Terminal Code	Country	Country Code	State
CASABLANCA, Mohamed V	**CMN**	Terminal 1	1	Morocco	MA	
		Terminal 2	2			
		Terminal 3	3			
CHANGSHA, Huanghua International	**CSX**	Terminal 1	1	People's Republic of China	CN	
		Terminal 2	2			
CHENGDU, Shuangliu International	**CTU**	Terminal 1	1	People's Republic of China	CN	
		Terminal 2	2			
CHENNAI, India	**MAA**	Anna International Terminal	I	India	IN	
		Kamaraj Domestic Terminal	D			
CHICAGO, O'Hare, International	**ORD**	Terminal 1	1	USA	US	IL
		Terminal 2	2			
		Terminal 3	3			
		International Terminal 5	5			
CHONGQUING	**CKG**	Domestic	D	People's Republic of China	CN	
		International	I			
CINCINNATI, Northern Kentucky	**CVG**	Terminal 2	2	USA	US	OH
		Terminal 3	3			
COLOGNE	**CGN**	Terminal 1	1	Germany	DE	
		Terminal 2	2			
COPENHAGEN, Kastrup	**CPH**	Terminal 1	1	Denmark	DK	
		Terminal 2	2			
		Terminal 3	3			
		Go Terminal	L			
DALAMAN, International	**DLM**	International Terminal	I	Turkey	TR	
		Domestic Terminal	D			
DALLAS/FORT WORTH, International	**DFW**	Terminal A	A	USA	US	TX
		Terminal B	B			
		Terminal C	C			
		Terminal D	D			
		Terminal E	E			
DALLAS, Love Field	**DAL**	Terminal 1	1	USA	US	TX
		Terminal 2	2			
DELHI, Indira Gandhi	**DEL**	Terminal 1	1	India	IN	
		Terminal 2	2			
		Terminal 3	3			

Airport Name	Airport Code	Terminal Name	Terminal Code	Country	Country Code	State
DETROIT, Wayne County	**DTW**	North Terminal	N	USA	US	MI
		E.H. McNamara Terminal	EM			
DUBAI, International	**DXB**	Terminal 1	1	United Arab Emirates	AE	
		Terminal 2	2			
		Terminal 3	3			
DUBLIN	**DUB**	Terminal 1	1	Eire	IE	
		Terminal 2	2			
FORT LAUDERDALE, Hollywood, International	**FLL**	Terminal 1	1	USA	US	FL
		Terminal 2	2			
		Terminal 3	3			
		Terminal 4	4			
		Commuter Terminal	R			
FRANKFURT, International	**FRA**	Terminal 1	1	Germany	DE	
		Terminal 2	2			
		ICE Train Station	TN			
FUKUOKA	**FUK**	Domestic 1	D1	Japan	JP	
		Domestic 2	D2			
		Domestic 3	D3			
		International	I			
GDANSK, Lech Walesa	**GDN**	Terminal 1	1	Poland	PL	
		Terminal 2	2			
GENEVA, International	**GVA**	Main Terminal	M	Switzerland	CH	
		Charter Terminal	H			
		Train Station	TN			
GLASGOW, International	**GLA**	Main Terminal	M	United Kingdom	GB	
		Terminal 2	2			
GOLD COAST, Coolangatta	**OOL**	Terminal 1	1	Australia	AU	
		Terminal 2	2			
GUADALAJARA, Miguel Hidalgo	**GDL**	Terminal 1	1	Mexico	MX	
		Terminal 2	2			
HAMBURG	**HAM**	Terminal 1	1	Germany	DE	
		Terminal 2	2			
HARARE	**HRE**	Domestic Terminal	D	Zimbabwe	ZW	
		International Terminal	I			
HAVANA, Jose Marti International	**HAV**	Terminal 1	1	Cuba	CU	
		Terminal 2	2			
		Terminal 3	3			
		Terminal 5	5			

Airport Name	Airport Code	Terminal Name	Terminal Code	Country	Country Code	State
HELSINKI, Vantaa	**HEL**	Terminal 1	1	Finland	FI	
		Terminal 2	2			
HOBART, International	**HBA**	Domestic Terminal	D	Australia	AU	TS
		International Terminal	I			
HO CHI MINH CITY	**SGN**	Terminal 1	1	Vietnam	VN	
		Terminal 2	2			
HONG KONG, International	**HKG**	Terminal 1	1	Hong Kong (SAR) China	HK	
		Terminal 2	2			
HONOLULU, International	**HNL**	Main Terminal	M	USA	US	HI
		Commuter Terminal	R			
		Inter-Island	Z			
HOUSTON, George Bush Intercontinental	**IAH**	Terminal A	A	USA	US	TX
		Terminal B	B			
		Terminal C	C			
		Terminal D	D			
		Terminal E	E			
ISTANBUL, Ataturk	**IST**	Domestic Terminal	D	Turkey	TR	
		International Terminal	I			
IZMIR, Adnan Menderes	**ADB**	Domestic	D	Turkey	TR	
		International	I			
JAIPUR, International	**JAI**	Terminal 1	1	India	IN	
		Terminal 2	2			
JAKARTA, Soekarno-Hatta	**CGK**	Terminal 1	1	Indonesia	ID	
		Terminal 2	2			
		Terminal 3	3			
JEDDAH, King Abdulaziz International	**JED**	Hajj Terminal	H	Saudi Arabia	SA	
		North Terminal	N			
		South Terminal	S			
JOHANNESBURG, O.R. Tambo International	**JNB**	Terminal A	A	South Africa	ZA	
		Terminal B	B			
KABUL, Khwaja Rawash	**KBL**	International Terminal	I	Afghanistan	AF	
		Domestic Terminal	D			
KANSAS CITY, International	**MCI**	Building A	A	USA	US	MO
		Building B	B			
		Building C	C			
KAOHSIUNG, International	**KHH**	Domestic	D	Chinese Taipei	TW	
		International	I			

Airport Name	Airport Code	Terminal Name	Terminal Code	Country	Country Code	State
KARACHI, Jinnah International	**KHI**	Hajj Terminal	H	Pakistan	PK	
		Jinnah Terminal	M			
KATOWICE, Pyrzowice	**KTW**	Terminal A	A	Poland	PL	
		Terminal B	B			
KAZAN, International	**KZN**	Terminal 1	1	Russian Federation	RU	
		Terminal 2	2			
KIEV, Borispol	**KBP**	Terminal B (Domestic/ International)	B	Ukraine	UA	
		Terminal D (International)	D			
		Terminal F (International)	F			
KIEV, Zhuliany International	**IEV**	Terminal A	A	Ukraine	UA	
		Terminal B	B			
KOTA KINABALU	**BKI**	Terminal 1	1	Malaysia	MY	
		Terminal 2	2			
KRAKOW, John Paul II Balice International	**KRK**	Domestic Terminal	D	Poland	PL	
		International Terminal	I			
KUALA LUMPUR, International	**KUL**	Low Cost Carrier Terminal	L	Malaysia	MY	
		Main Terminal	M			
KUWAIT, International	**KWI**	Kuwait Airport Passenger	M	Kuwait	KW	
		Sheik Saad General Aviation	R			
LAGOS, Murtala Muhammed International	**LOS**	Domestic Terminal	D	Nigeria	NG	
		International Terminal	I			
LAHORE, Allama Iqbal International	**LHE**	Hajj Terminal	H	Pakistan	PK	
		Allama Iqbal Terminal	M			
LANZAROTE	**ACE**	Terminal 1	1	Spain	ES	
		Terminal 2	2			
LAS VEGAS, McCarran, International	**LAS**	Terminal 1	1	USA	US	NV
		Terminal 3	3			
LISBON	**LIS**	Terminal 1	1	Portugal	PT	
		Terminal 2	2			
LODZ, Wladyslaw Reymont	**LCJ**	Terminal 1	1	Poland	PL	
		Terminal 2	2			
		Terminal 3	3			

Airport Name	Airport Code	Terminal Name	Terminal Code	Country	Country Code	State
LONDON, Gatwick	**LGW**	North Terminal	N	United Kingdom	GB	
		South Terminal	S			
Heathrow	**LHR**	Terminal 1	1	United Kingdom	GB	
		Terminal 3	3			
		Terminal 4	4			
		Terminal 5	5			
		Central Train Station (Terminal 1/2/3)	TN			
LOS ANGELES, International	**LAX**	Terminal 1	1	USA	US	CA
		Terminal 2	2			
		Terminal 3	3			
		Terminal 4	4			
		Terminal 5	5			
		Terminal 6	6			
		Terminal 7	7			
		Terminal 8	8			
		Tom Bradley International Terminal	B			
		West Imperial Terminal	W			
LOS CABOS, San Jose del Cabo	**SJD**	Terminal 1	1	Mexico	MX	
		Terminal 2	2			
		Terminal 3	3			
LYON, Saint Exupery	**LYS**	Terminal 1	1	France	FR	
		Terminal 2	2			
		Terminal 3	3			
		Train Station	TN			
MADRID, Barajas	**MAD**	Terminal 1	1	Spain	ES	
		Terminal 2	2			
		Terminal 3	3			
		Terminal 4	4			
		Term 4S	4S			
MALAGA	**AGP**	Terminal 1	1	Spain	ES	
		Terminal 2	2			
		Terminal 3	3			
MANCHESTER, International	**MAN**	Terminal 1	1	United Kingdom	GB	
		Terminal 2	2			
		Terminal 3	3			
		Train Station	TN			

Airport Name	Airport Code	Terminal Name	Terminal Code	Country	Country Code	State
MANILA, Ninoy Aquino, International	**MNL**	Terminal 1	1	Philippines	PH	
		Terminal 2	2			
		Terminal 3	3			
		Terminal 4	4			
MAPUTO, International		Terminal A (Domestic)	A	Mozambique	MZ	
		Terminal B (International)	B			
MARRAKECH, Menara	**RAK**	Terminal 1	1	Morocco	MA	
		Terminal 2	2			
MARSEILLE, Provence	**MRS**	1 (International)	1	France	FR	
		3 (Domestic)	3			
		4 (Domestic)	4			
		MP2 Terminal	L			
MELBOURNE	**MEL**	Terminal 1	1	Australia	AU	VI
		Terminal 2	2			
		Terminal 3	3			
		Terminal 4	4			
MEXICO CITY, Juarez, International	**MEX**	Terminal 1	1	Mexico	MX	
		Terminal 2	2			
MILAN, Malpensa	**MXP**	Terminal 1	1	Italy	IT	
		Terminal 2	2			
MINNEAPOLIS, International	**MSP**	Terminal 1 - Lindbergh	1	USA	US	MN
		Terminal 2 - Humphrey	2			
MOMBASA, Moi International	**MBA**	Terminal 1	1	Kenya	KE	
		Terminal 2	2			
MONTERREY, General Mariano Escobedo	**MTY**	Terminal A	A	Mexico	MX	
		Terminal B	B			
		Terminal C	L			
MOSCOW, Sheremetyevo International	**SVO**	Terminal B (Domestic)	B	Russian Federation	RU	
		Terminal C (International)	C			
		Terminal D (Domestic/ International)	D			
		Terminal E (International)	E			
		Terminal F (International)	F			

Airport Name	Airport Code	Terminal Name	Terminal Code	Country	Country Code	State
Vnukovo, International	**VKO**	Terminal A (International and Domestic)	A	Russian Federation	RU	
		Terminal B (International)	B			
		Terminal D (Domestic)	D			
		Gen Aviation 3A	3A	Russian Federation	RU	
		Gen Aviation 3B	3B			
		Kosmos (Gen Aviation)	K			
MUMBAI, Chhatrapati Shivaji, International	**BOM**	Terminal 1A (Domestic)	1A	India	IN	
		Terminal 1B (Domestic)	1B			
		Terminal 2 (International)	2			
MUNICH, International	**MUC**	Terminal 1	1	Germany	DE	
		Terminal 2	2			
NASSAU, International	**NAS**	Terminal A	A	Bahamas	BS	
		Terminal B	B			
		Terminal C	C			
NEWARK, Liberty International	**EWR**	Terminal A	A	USA	US	NJ
		Terminal B	B			
		Terminal C	C			
		Train Station	TN			
NEW YORK, J F Kennedy International	**JFK**	Terminal 1	1	USA	US	NY
		Terminal 2	2			
		Terminal 3	3			
		Terminal 4	4			
		Terminal 5	5			
		Terminal 7	7			
		Terminal 8	8			
La Guardia	**LGA**	Terminal A (Marine Air Terminal)	A	USA	US	NY
		Terminal B (Central Terminal)	B			
		Terminal C (USAir Terminal)	C			
		Terminal D (Delta Airlines)	D			
NICE, Cote D'Azur	**NCE**	Aerogare 1	1	France	FR	
		Aerogare 2	2			
NOVOSIBIRSK, Tolmachevo Airport	**OVB**	Terminal A	A	Russian Federation	RU	
		Terminal B	B			

Airport Name	Airport Code	Terminal Name	Terminal Code	Country	Country Code	State
OAKLAND, International	**OAK**	Terminal 1	1	USA	US	CA
		Terminal 2 (Lionel J. Wilson)	2			
ONTARIO, International	**ONT**	Terminal 2	2	USA	US	CA
		Terminal 4	4			
		International Terminal	I			
OSAKA, Kansai International	**KIX**	Terminal 1	1	Japan	JP	
		Terminal 2	2			
PAPEETE, Faa'a International	**PPT**	International Terminal	I	French Polynesia	PF	
		Domestic Terminal 1	D1			
		Domestic Terminal 2	D2			
PARIS, Charles de Gaulle	**CDG**	Aerogare 1	1	France	FR	
		Aerogare 2 Terminal A	2A			
		Aerogare 2 Terminal B	2B			
		Aerogare 2 Terminal C	2C			
		Aerogare 2 Terminal D	2D			
		Aerogare 2 Terminal E	2E			
		Aerogare 2 Terminal F	2F			
		Aerogare 2 Terminal G	2G			
		Aerogare 3	3			
		Train Station	TN			
Orly	**ORY**	Orly Sud	S	France	FR	
		Orly Ouest	W			
PERTH	**PER**	T1 (International)	1	Australia	AU	WA
		T2 (Domestic)	2			
		T3 (Domestic)	3			
		T4 (Qantas)	4			
		National Jet Systems Terminal	NC			
		Flight Centre Terminal	Z			
PHILADELPHIA, International	**PHL**	Terminal A	A	USA	US	PA
		Terminal B	B			
		Terminal C	C			
		Terminal D	D			
		Terminal E	E			
		Terminal F	F			

Airport Name	Airport Code	Terminal Name	Terminal Code	Country	Country Code	State
PHOENIX, Sky Harbor International	**PHX**	Terminal 2	2	USA	US	AZ
		Terminal 3	3			
		Terminal 4	4			
PHUKET, International	**HKT**	Terminal 1	1	Thailand	TH	
		Terminal 2	2			
PORT MORESBY, Jacksons International	**POM**	International Terminal	I	Papua New Guinea	PG	
		Domestic Terminal	D			
PORTO ALEGRE, Salgardo Filho International	**POA**	Terminal 1	1	Brazil	BR	RS
		Terminal 2	2			
PRAGUE, Ruzyne	**PRG**	Terminal 1	1	Czech Republic	CZ	
		Terminal 2	2			
		Terminal 3	3			
RALEIGH, Durham	**RDU**	Terminal 1	1	USA	US	NC
		Terminal 2	2			
RIO DE JANEIRO, International	**GIG**	Terminal 1	1	Brazil	BR	RJ
		Terminal 2	2			
RIYADH, King Khaled, International	**RUH**	Terminal 1	1	Saudi Arabia	SA	
		Terminal 2	2			
		Terminal 3	3			
ROME, Fiumicino	**FCO**	Terminal 1	1	Italy	IT	
		Terminal 2	2			
		Terminal 3	3			
		Terminal 5	5			
ST LOUIS, Lambert International	**STL**	Terminal 1	1	USA	US	MO
		Terminal 2	2			
ST PETERSBURG, Pulkovo	**LED**	Pulkovo 1	1	Russian Federation	RU	
		Pulkovo 2	2			
SACRAMENTO, International	**SMF**	Terminal A	A	USA	US	CA
		Central Terminal B	B			
SALT LAKE CITY, International	**SLC**	Terminal Unit 1	1	USA	US	UT
		Terminal Unit 2	2			
SAN ANTONIO, International	**SAT**	Terminal A	A	USA	US	TX
		Terminal B	B			
SAN DIEGO, International	**SAN**	Terminal 1	1	USA	US	CA
		Terminal 2	2			
		Commuter Terminal	R			

Airport Name	Airport Code	Terminal Name	Terminal Code	Country	Country Code	State
SAN FRANCISO, International	**SFO**	Terminal 1	1	USA	US	CA
		Terminal 2	2			
		Terminal 3	3			
		International Terminal	I			
SAN JOSE DEL CABO, Los Cabos International	**SJD**	Terminal 1	1	Mexico	MX	
		Terminal 2	2			
		Terminal 3	3			
		Terminal 4	4			
SAN JOSE, International	**SJC**	Terminal A	A	USA	US	CA
		Terminal B	B	USA		
SAN JOSE, Juan Santamaria International	**SJO**	Main Terminal	M	Costa Rica	CR	
		Domestic Terminal	D			
SAN JUAN, Luis Munoz Marin	**SJU**	Terminal A	A	Puerto Rico	PR	
		Terminal B	B			
		Terminal C	C			
		Terminal D	D			
SAO PAULO, Guarulhos	**GRU**	Terminal 1	1	Brazil	BR	SP
		Terminal 2	2			
SAPPORO, Chitose	**CTS**	International Terminal	I	Japan	JP	
		Chitose Terminal	D			
SEOUL, Gimpo International	**GMP**	Domestic Terminal	D	Korea, Republic of	KR	
		Sky City International Terminal	I			
SEYCHELLES, International	**SEZ**	International Terminal	I	Seychelles	SC	
		Domestic Terminal	D			
SHANGHAI, Hongqiao	**SHA**	Terminal 1	1	People's Republic of China	CN	
		Terminal 2	2			
Pudong International	**PVG**	Terminal 1	1	China	CN	
		Terminal 2	2			
SHARM EL SHEIKH, International	**SSH**	Terminal 1	1	Egypt	EG	
		Terminal 2	2			
SHENYANG, Taoxian International	**SHE**	Terminal 1	1	People's Republic of China	CN	
		Terminal 2	2			

Airport Name	Airport Code	Terminal Name	Terminal Code	Country	Country Code	State
SHENZHEN	**SZX**	Terminal A	A	People's Republic of China	CN	
		Terminal B	B			
		Terminal D	D			
SIEM REAP, International	**REP**	Garden International Terminal	I	Cambodia	KH	
		Domestic Terminal	D			
SIMFEROPOL, International	**SIP**	Terminal A	A	Ukraine	UA	
		Terminal B	B			
		Terminal C	C			
		Terminal D	D			
SINGAPORE, Changi	**SIN**	Terminal 1	1	Singapore	SG	△
		Terminal 2	2			
		Terminal 3	3			
SOFIA, Vrazhdebna	**SOF**	Terminal 1	1	Bulgaria	BG	
		Terminal 2	2			
STOCKHOLM, Arlanda	**ARN**	Terminal 2	2	Sweden	SE	
		Terminal 3	3			
		Terminal 4	4			
		Terminal 5	5			
		SJ Train Station	TN			
		Arlanda Express Train Station	TX			
STUTTGART	**STR**	Terminal 1	1	Germany	DE	
		Terminal 2	2			
		Terminal 3	3			
		Terminal 4	4			
SYDNEY, Kingsford Smith	**SYD**	Terminal 1 (International)	1	Australia	AU	NS
		Terminal 2 (Domestic)	2			
		Terminal 3 (Qantas Domestic)	3			
TAIPEI, Taoyuan International	**TPE**	Terminal 1	1	Taiwan	TW	
		Terminal 2	2			
TAMPERE, Pirkkala	**TMP**	Terminal 1	1	Finland	FI	
		Terminal 2	2			
TASHKENT, International	**TAS**	Terminal 1	1	Uzbekistan	UZ	
		Terminal 2	2			
		Terminal 3	3			
TEHRAN, Mehrabad International	**THR**	Terminal 1	1	Iran	IR	
		Terminal 2	2			
		3 Haj (Charter)	3			
		Terminal 4	4			

Airport Name	Airport Code	Terminal Name	Terminal Code	Country	Country Code	State
TEL AVIV, Ben Gurion International	**TLV**	Terminal 1	1	Israel	IL	
		Terminal 2	2			
		Terminal 3 (International)	3			
THIRUVANANTHAPURAN, Trivandrum International	**TRV**	Terminal 1	1	India	IN	
		Terminal 2	2			
TOKYO, Haneda	**HND**	Domestic Terminal 1	D1	Japan	JP	
		Domestic Terminal 2	D2			
		International Terminal	I			
Narita	**NRT**	Terminal 1	1	Japan	JP	
		Terminal 2	2			
TORONTO, Lester B Pearson	**YYZ**	Terminal 1	1	Canada	CA	ON
		Terminal 3	3			
TUNIS, Carthage	**TUN**	Charter Terminal	H	Tunisia	TN	
		Main Terminal	M			
URUMQI	**URC**	Terminal 1	1	China, Peoples Republic of	CN	
		Terminal 2	2			
		Terminal 3	3			
VANCOUVER, International	**YVR**	Main Terminal	M	Canada	CA	BC
		South Terminal	S			
□ **VIENTIANE, Wattay International**	**VTE**	International Terminal	I	Lao People's Democratic Republic	LA	
		Domestic Terminal	D			
WASHINGTON, Ronald Reagan National	**DCA**	Terminal A	A	USA	US	DC
		Terminal B	B			
		Terminal C	C			
WUTHAN, Hsukiapeng	**WUH**	Terminal 1	1	China	CN	
		Terminal 2	2			
△ **XI AN XIANYANG**	**XIY**	Terminal 2	2	China	CN	
		Terminal 3	3			
ZHENGZHOU	**CGO**	Low Cost Carrier Terminal	L	China	CN	
		Main Terminal	M			

APPENDIX E
REJECT REASON

This Appendix lists in alphabetical order the standard texts to be used as Reject Reason on SSM and ASM messages using Action dentifier NAC. See Chapter 4 or 5 for application.

ACTION IDENTIFIER INVALID
ACV CODE INVALID
AIRCRAFT TYPE INVALID
AIRLINE DESIGNATOR INVALID
AIRLINE DESIGNATOR IS REQUIRED
DATE DISCREPANCY INVALID
DATE INVALID
DATE OF ARRIVAL INVALID
DATE OF DEPARTURE INVALID
DATE VARIATION INVALID
DAYS OF OPERATION INVALID
DAYS/DATES OVERLAPPING
DEI 2/3/4/5/9 AIRLINE DESIGNATOR INVALID
DEI 7 INVALID
DEI 7 WITH INVALID CLASS
DEI 710/711 INVALID
DEI 8 CODE INVALID
DEI 8 CONFLICT
DEI 8 TRAFFIC RESTRICTION TYPE INVALID
DEI 10 AND 50 NOT ALLOWED ON SAME LEG
DEI 98/99 CONFLICT
DEI 113/114/115 IS REQUIRED
DEI 127 IS REQUIRED
DEI 201 INVALID
DEI 501 CONFLICT
DEI 502 CONFLICT
DEI 503 CODE INVALID
DEI 504 CODE INVALID
DEI 505 CODE INVALID
DEI DUPLICATION
DEI FORMAT ERROR
DEI IS REQUIRED
DEI NOT ALLOWED IN SEGMENT INFORMATION
DEI NOT ALLOWED ON FIRST LEG

DEI NOT ALLOWED ON SEGMENT
DEI NUMBER INVALID
DEI SEGMENT/LEG INVALID
DEI TEXT IS REQUIRED
DEI WITH NIL NOT ALLOWED
EQUIPMENT CHANGE NOT ALLOWED
EQUIPMENT CHANGE USED TOO MANY TIMES
EQUIPMENT DATA IS REQUIRED
FLIGHT ARRIVAL—ONLY ONE PER AIRPORT PER DAY
FLIGHT DEPARTURE—ONLY ONE PER AIRPORT PER DAY
FLIGHT DESIGNATOR IS REQUIRED
FLIGHT DOES NOT OPERATE FOR DATE AND FREQUENCY
FLIGHT NUMBER INVALID
FLIGHT/DATE LIMITED TO ONE OCCURRENCE
INTERNAL PROCESSING ERROR—PLEASE RESUBMIT
LEG CHANGE NOT ALLOWED
LEG DATA CANNOT BE COMPLETELEY DELETED
LEG DATA CONFLICT WITH EXISTING SCHEDULE
LEG DATA INVALID
LEG DATA IS REQUIRED
LEG NUMBER GREATER THAN MAXIMUM ALLOWED
MESSAGE FUNCTION INVALID
MESSAGE SEQUENCE REFERENCE INVALID
ON-TIME PERFORMANCE INVALID
ON-TIME PERFORMANCE INDICATOR FOR DELAYS & CANCELLATIONS INVALID
OPERATIONAL SUFFIX INVALID
PERIOD—FREQUENCY RATE INVALID
PERIOD OF OPERATION INVALID
PERIOD OF SCHEDULE VALIDITY INVALID
PERIOD OUTSIDE SYSTEM DATA RANGE
PERIOD/FREQUENCY CONFLICT WITH EXISTING
PERIOD/FREQUENCY NOT ALLOWED
PRBD DUPLICATION
PRBD INVALID
PRBD/PRBM OR ACV DO NOT MATCH
PRBM INVALID
REPEAT REQUEST—UPDATING IN PROGRESS
RTNS NOT USED PROPERLY
SECONDARY ACTION IDENTIFIER INVALID
SECURE FLIGHT INDICATOR INVALID
SERVICE TYPE CODE INVALID
STATION CODE INVALID
STATION OF ARRIVAL INVALID
STATION OF DEPARTURE DIFFERS FROM PREVIOUS ARRIVAL

STATION OF DEPARTURE INVALID
TERMINAL CODE INVALID
TIME INVALID
TIME MODE INVALID
TIME OF ARRIVAL INVALID
TIME OF DEPARTURE EARLIER THAN PREVIOUS ARRIVAL
TIME OF DEPARTURE INVALID
UNAUTHORISED TO AMEND THIS FLIGHT
UTC/LT VARIATION INVALID
XASM NOT USED PROPERLY

APPENDIX F
UTC–LOCAL TIME COMPARISONS AND ISO TWO LETTER COUNTRY CODES

General

The Air Transport industry operates in an environment where local time and days vary from country to country. With the added complication caused by many countries adopting Daylight Saving Time during summer months, airlines require access to information displaying worldwide UTC (**U**niversal **T**ime **C**oordinated)—Local Time comparisons.

Appendix F provides UTC Standard and Daylight Saving Time—Local Time variations for each country where regular scheduled services operate.

While IATA is responsible for the administration of this Appendix, the information is deemed to be **'the best available'** at the time of publication.

When a country changes its DST dates then this pattern will be used to determine each successive DST date unless IATA is advised to the contrary by the country concerned.

The validity and use of the document relies entirely on the quality of the input, so your attention is directed to the section headed **AMENDMENT PROCEDURE**.

It should be remembered that this Appendix is an essential data base to other SSIM Chapters, particularly Chapter 7 in respect of the exchange of schedule data sets. For this reason alone, the Appendix must be an unambiguous accurate statement of time variations throughout the World.

The large number of countries included in the Appendix is intended to accommodate the needs of all first and second level air transport operators, for both on-line and connection purposes.

How To Use Appendix F Country Listing Showing UTC—Local Time Comparisons

The Appendix is arranged alphabetically by country name, each followed by its International Standards Organisation two letter country code. (Note that the country names are based on the "Codes For the Presentation of Names of Countries" adopted by the ISO, but edited slightly for the purposes of this Manual). Thus, it can be used to establish the ISO code for any included country. A decode of ISO Country Codes appears at the end of Appendix F.

Each country's ISO Code is used as the basic element in the Time Zone code. Within their borders, some countries have multiple Time Zones, each having a different standard UTC–Local Time variation. In such instances, numerics are appended to the Country Code to uniquely identify each basic Time Zone. Where variations in the application of Daylight Saving Time apply within a basic Time Zone, an additional alpha character is added to form a unique code for each sub-zone.

For each unique Time Zone the Standard Variation to UTC is displayed as plus (+) or minus (−) hours and minutes.

Example:

+0430 is 4.5 hours ahead of UTC;

-1100 is 11 hours behind UTC.

Where applicable, the DST Variation to UTC is similarly quoted following the Start Time/Date and End Time/Date, expressed in UTC, showing the period when DST is applied. A DST Start Time at midnight (UTC) is expressed as 0000 and refers to the date just starting. A DST End Time at midnight (UTC) is expressed as 2400 and refers to the date just ending. Three years DST information is included.

Generally, the Time Zone applicable for each individual location can be determined from the geographical description for each Time Zone. However, specific Local Time Zone airport information for each individual Location Identifier should be obtained within the IATA Airline Coding Directory.

Amendment Procedure

(a) Confirmed and planned amendments to Standard Times and Daylight Saving Times should be reported to the IATA Management (Email: SSIM@iata.org).

(b) Notification of changes to Appendix F will be made available on the SISC webpage of the IATA Slotlink site. In order to maintain sequential control the message heading includes a message reference ‘APP/F/number/date’ e.g. APP/F/011/28OCT10. The revised information is presented in the same format as in SSIM Appendix F tables.

Country Listing Showing UTC—Local Time Comparisons

Countries are abbreviated in this Manual by the use of the following two letter country codes which are based on the 'Codes For the Presentation of Names of Countries' adopted by the International Organization for Standardization, but have been edited slightly for the purpose of this Manual.

The information below includes DST information for:

Northern Hemisphere 2013, 2014, 2015 △

Southern Hemisphere 2012/2013, 2013/2014, 2014/2015 △

and reflects changes up to message APP/F/015/08FEB13. △

			– – – DST Start – – –		– – – DST End – – –		
Country Name	**Time Zone**	**Standard Variation**	**Time**	**Date**	**Time**	**Date**	**DST Variation**
Afghanistan	AF	**+0430**					
Aland Islands	AX	Aland Islands					
		+0200	0100	31MAR13	0100	27OCT13	+0300
			0100	30MAR14	0100	26OCT14	+0300
			0100	29MAR15	0100	25OCT15	+0300
Albania	AL	**+0100**	0100	31MAR13	0100	27OCT13	+0200
			0100	30MAR14	0100	26OCT14	+0200
			0100	29MAR15	0100	25OCT15	+0200
Algeria	DZ	**+0100**					
American Samoa	AS	**-1100**					
Andorra	AD	**+0100**	0100	31MAR13	0100	27OCT13	+0200
			0100	30MAR14	0100	26OCT14	+0200
			0100	29MAR15	0100	25OCT15	+0200
Angola	AO	**+0100**					
Anguilla	AI	**-0400**					
Antigua and Barbuda	AG	**-0400**					
Argentina	AR	**-0300**					
Armenia	AM	**+0400**					
Aruba	AW	**-0400**					
Australia	AU 1	Lord Howe Island					
		+1030	1530	06OCT12	1530	06APR13	+1100
			1530	05OCT13	1530	05APR14	+1100
			1530	04OCT14	1530	04APR15	+1100
	AU 2	Australian Capital Territory, New South Wales (excluding Lord Howe Island and Broken Hill), Victoria					
		+1000	1600	06OCT12	1600	06APR13	+1100
			1600	05OCT13	1600	05APR14	+1100
			1600	04OCT14	1600	04APR15	+1100
	AU 2A	Tasmania					
		+1000	1600	06OCT12	1600	06APR13	+1100
			1600	05OCT13	1600	05APR14	+1100
			1600	04OCT14	1600	04APR15	+1100
	AU 2B	Queensland					
		+1000					
	AU 3	South Australia, Broken Hill					
		+0930	1630	06OCT12	1630	06APR13	+1030
			1630	05OCT13	1630	05APR14	+1030
			1630	04OCT14	1630	04APR15	+1030

Country Name	Time Zone	Standard Variation	– – – DST Start – – – Time	Date	– – – DST End – – – Time	Date	DST Variation
	AU 3A	Northern Territory					
		+0930					
	AU 4	Western Australia					
		+0800					
Austria	AT	**+0100**	0100	31MAR13	0100	27OCT13	+0200
			0100	30MAR14	0100	26OCT14	+0200
			0100	29MAR15	0100	25OCT15	+0200
Azerbaijan	AZ	**+0400**	0000	31MAR13	2400	26OCT13	+0500
			0000	30MAR14	2400	25OCT14	+0500
			0000	29MAR15	2400	24OCT15	+0500
Bahamas (excluding Turks and Caicos Islands)	BS	**-0500**	0700	10MAR13	0600	03NOV13	-0400
			0700	09MAR14	0600	02NOV14	-0400
			0700	08MAR15	0600	01NOV15	-0400
Bahrain	BH	**+0300**					
Bangladesh	BD	**+0600**					
Barbados	BB	**-0400**					
Belarus	BY	**+0300**					
Belgium	BE	**+0100**	0100	31MAR13	0100	27OCT13	+0200
			0100	30MAR14	0100	26OCT14	+0200
			0100	29MAR15	0100	25OCT15	+0200
Belize	BZ	**-0600**					
Benin	BJ	**+0100**					
Bermuda	BM	**-0400**	0600	10MAR13	0500	03NOV13	-0300
			0600	09MAR14	0500	02NOV14	-0300
			0600	08MAR15	0500	01NOV15	-0300
Bhutan	BT	**+0600**					
Bolivia, Plurinational State of	BO	**-0400**					
Bonaire, Saint Eustatius and Saba	BQ	**-0400**					
Bosnia and Herzegovina	BA	**+0100**	0100	31MAR13	0100	27OCT13	+0200
			0100	30MAR14	0100	26OCT14	+0200
			0100	29MAR15	0100	25OCT15	+0200
Botswana	BW	**+0200**					
Brazil	BR 1	Rio Grande do Sul, Santa Catarina, Parana, Sao Paulo, Rio de Janeiro, Espirito Santo, Minas Gerais, Goias, Distrito Federal, Tocantins					
		-0300	0300	20OCT13	0200	16FEB14	-0200
			0300	19OCT14	0200	22FEB15	-0200
			0300	18OCT15	0200	21FEB16	-0200
	BR 1A	Amapa, Para, Pernambuco, Ceara, Maranhao, Paraiba, Rio Grande do Norte, Alagoas, Sergipe, Piaui, Bahia					
		-0300					
	BR 2	Mato Grosso, Mato Grosso do Sul					
		-0400	0400	20OCT13	0300	16FEB14	-0300
			0400	19OCT14	0300	22FEB15	-0300
			0400	18OCT15	0300	21FEB16	-0300

Country Name	Time Zone	Standard Variation	DST Start Time	DST Start Date	DST End Time	DST End Date	DST Variation
	BR 2A	Acre, Amazonas, Rondonia, Roraima					
		-0400					
	BR 4	Fernando de Noronha					
		-0200					
Brunei Darussalam	BN	**+0800**					
Bulgaria	BG	**+0200**	0100	31MAR13	0100	27OCT13	+0300
			0100	30MAR14	0100	26OCT14	+0300
			0100	29MAR15	0100	25OCT15	+0300
Burkina Faso	BF	**+0000**					
Burundi	BI	**+0200**					
Cambodia	KH	**+0700**					
Cameroon	CM	**+0100**					
Canada	CA 1	Newfoundland Time Zone (excluding Labrador)					
		-0330	0530	10MAR13	0430	03NOV13	-0230
			0530	09MAR14	0430	02NOV14	-0230
			0530	08MAR15	0430	01NOV15	-0230
	CA 2	Atlantic Time Zone - areas observing DST (including Labrador)					
		-0400	0600	10MAR13	0500	03NOV13	-0300
			0600	09MAR14	0500	02NOV14	-0300
			0600	08MAR15	0500	01NOV15	-0300
	CA 2A	Atlantic Time Zone - areas not observing DST					
		-0400					
	CA 3	Eastern Time Zone - areas observing DST					
		-0500	0700	10MAR13	0600	03NOV13	-0400
			0700	09MAR14	0600	02NOV14	-0400
			0700	08MAR15	0600	01NOV15	-0400
	CA 3A	Eastern Time Zone - areas not observing DST					
		-0500					
	CA 4	Central Time Zone (excluding Saskatchewan)					
		-0600	0800	10MAR13	0700	03NOV13	-0500
			0800	09MAR14	0700	02NOV14	-0500
			0800	08MAR15	0700	01NOV15	-0500
	CA 4A	Central Time Zone - Saskatchewan					
		-0600					
	CA 5	Mountain Time Zone - areas observing DST					
		-0700	0900	10MAR13	0800	03NOV13	-0600
			0900	09MAR14	0800	02NOV14	-0600
			0900	08MAR15	0800	01NOV15	-0600
	CA 5A	Mountain Time Zone - areas not observing DST					
		-0700					
	CA 6	Pacific Time Zone					
		-0800	1000	10MAR13	0900	03NOV13	-0700
			1000	09MAR14	0900	02NOV14	-0700
			1000	08MAR15	0900	01NOV15	-0700
Cape Verde	CV	**-0100**					
Cayman Islands	KY	**-0500**					
Central African Republic	CF	**+0100**					
Chad	TD	**+0100**					

Country Name	Time Zone	Standard Variation	DST Start Time	DST Start Date	DST End Time	DST End Date	DST Variation
Chile	CL 1	Mainland					
		-0400	0400	02SEP12	0300	10MAR13	-0300
			0400	13OCT13	0300	09MAR14	-0300
			0400	12OCT14	0300	15MAR15	-0300
	CL 2	Easter Island					
		-0600	0400	02SEP12	0300	10MAR13	-0500
			0400	13OCT13	0300	09MAR14	-0500
			0400	12OCT14	0300	15MAR15	-0500
China, Peoples Republic of	CN	**+0800**					
Chinese Taipei	TW	**+0800**					
Christmas Island (Indian Ocean)	CX	**+0700**					
Cocos (Keeling) Islands	CC	**+0630**					
Colombia	CO	**-0500**					
Comoros	KM	**+0300**					
Congo	CG	**+0100**					
Congo, Democratic Republic of	CD 1	Kinshasa, Bandundu, Bas-Congo, Equateur					
		+0100					
	CD 2	Kasai Occidental, Kasai Oriental, Nord-Kivu, Sud-Kivu, Maniema, Orientale, Katanga					
		+0200					
Cook Islands	CK	**-1000**					
Costa Rica	CR	**-0600**					
Côte d'Ivoire	CI	**+0000**					
Croatia	HR	**+0100**	0100	31MAR13	0100	27OCT13	+0200
			0100	30MAR14	0100	26OCT14	+0200
			0100	29MAR15	0100	25OCT15	+0200
Cuba	CU	**-0500**					
Curacao	CW	**-0400**					
Cyprus	CY	**+0200**	0100	31MAR13	0100	27OCT13	+0300
			0100	30MAR14	0100	26OCT14	+0300
			0100	29MAR15	0100	25OCT15	+0300
Czech Republic	CZ	**+0100**	0100	31MAR13	0100	27OCT13	+0200
			0100	30MAR14	0100	26OCT14	+0200
			0100	29MAR15	0100	25OCT15	+0200
Denmark	DK	**+0100**	0100	31MAR13	0100	27OCT13	+0200
			0100	30MAR14	0100	26OCT14	+0200
			0100	29MAR15	0100	25OCT15	+0200
Djibouti	DJ	**+0300**					
Dominica	DM	**-0400**					
Dominican Republic	DO	**-0400**					
Ecuador	EC 1	Mainland					
		-0500					
	EC 2	Galapagos Islands					
		-0600					
Egypt	EG	**+0200**					
El Salvador	SV	**-0600**					

Country Name	Time Zone	Standard Variation	DST Start Time	DST Start Date	DST End Time	DST End Date	DST Variation
Equatorial Guinea	GQ	**+0100**					
Eritrea	ER	**+0300**					
Estonia	EE	**+0200**	0100	31MAR13	0100	27OCT13	+0300
			0100	30MAR14	0100	26OCT14	+0300
			0100	29MAR15	0100	25OCT15	+0300
Ethiopia	ET	**+0300**					
Falkland Islands (Malvinas)	FK	**-0300**					
Faroe Islands	FO	**+0000**	0100	31MAR13	0100	27OCT13	+0100
			0100	30MAR14	0100	26OCT14	+0100
			0100	29MAR15	0100	25OCT15	+0100
Fiji	FJ	**+1200**					
Finland	FI	**+0200**	0100	31MAR13	0100	27OCT13	+0300
			0100	30MAR14	0100	26OCT14	+0300
			0100	29MAR15	0100	25OCT15	+0300
France	FR	**+0100**	0100	31MAR13	0100	27OCT13	+0200
			0100	30MAR14	0100	26OCT14	+0200
			0100	29MAR15	0100	25OCT15	+0200
French Guiana	GF	**-0300**					
French Polynesia	PF 1	Marquesas Islands					
		-0930					
	PF 2	Society Archipelago (including Tahiti), Tubuai Islands, Tuamotu Archipelago (excluding Gambier Islands)					
		-1000					
	PF 3	Gambier Islands					
		-0900					
Gabon	GA	**+0100**					
Gambia	GM	**+0000**					
Georgia	GE	**+0400**					
Germany	DE	**+0100**	0100	31MAR13	0100	27OCT13	+0200
			0100	30MAR14	0100	26OCT14	+0200
			0100	29MAR15	0100	25OCT15	+0200
Ghana	GH	**+0000**					
Gibraltar	GI	**+0100**	0100	31MAR13	0100	27OCT13	+0200
			0100	30MAR14	0100	26OCT14	+0200
			0100	29MAR15	0100	25OCT15	+0200
Greece	GR	**+0200**	0100	31MAR13	0100	27OCT13	+0300
			0100	30MAR14	0100	26OCT14	+0300
			0100	29MAR15	0100	25OCT15	+0300
Greenland	GL 1	Greenland (excluding Pituffik, Ittoqqortoormiit, Nerlerit Inaat)					
		-0300	0100	31MAR13	0100	27OCT13	-0200
			0100	30MAR14	0100	26OCT14	-0200
			0100	29MAR15	0100	25OCT15	-0200
	GL 2	Pituffik					
		-0400	0600	10MAR13	0500	03NOV13	-0300
			0600	09MAR14	0500	02NOV14	-0300
			0600	08MAR15	0500	01NOV15	-0300

Country Name	Time Zone	Standard Variation	DST Start Time	DST Start Date	DST End Time	DST End Date	DST Variation
	GL 3	Ittoqqortoormiit, Nerlerit Inaat					
		-0100	0100	31MAR13	0100	27OCT13	+0000
			0100	30MAR14	0100	26OCT14	+0000
			0100	29MAR15	0100	25OCT15	+0000
Grenada	GD	**-0400**					
Guadeloupe	GP	**-0400**					
Guam	GU	**+1000**					
Guatemala	GT	**-0600**					
Guinea	GN	**+0000**					
Guinea-Bissau	GW	**+0000**					
Guyana	GY	**-0400**					
Haiti	HT	**-0500**					
Honduras	HN	**-0600**					
Hong Kong (SAR), China	HK	**+0800**					
Hungary	HU	**+0100**	0100	31MAR13	0100	27OCT13	+0200
			0100	30MAR14	0100	26OCT14	+0200
			0100	29MAR15	0100	25OCT15	+0200
Iceland	IS	**+0000**					
India (including Andaman Islands)	IN	**+0530**					
Indonesia	ID 1	Western Time Zone (including Sumatera, Jawa, Kalimantan Barat, Kalimantan Tengah)					
		+0700					
	ID 2	Central Time Zone (including Kalimantan Selatan, Kalimantan Timur, Sulawesi, Nusa Tenggara)					
		+0800					
	ID 3	Eastern Time Zone (including Maluku, Papua)					
		+0900					
Iran (Islamic Republic of)	IR	**+0330**	2030	21MAR13	1930	21SEP13	+0430
			2030	21MAR14	1930	21SEP14	+0430
			2030	21MAR15	1930	21SEP15	+0430
Iraq	IQ	**+0300**					
Ireland	IE	**+0000**	0100	31MAR13	0100	27OCT13	+0100
			0100	30MAR14	0100	26OCT14	+0100
			0100	29MAR15	0100	25OCT15	+0100
Israel	IL	**+0200**	0000	29MAR13	2300	05OCT13	+0300
			0000	28MAR14	2300	04OCT14	+0300
			0000	27MAR15	2300	03OCT15	+0300
Italy	IT	**+0100**	0100	31MAR13	0100	27OCT13	+0200
			0100	30MAR14	0100	26OCT14	+0200
			0100	29MAR15	0100	25OCT15	+0200
Jamaica	JM	**-0500**					
Japan	JP	**+0900**					
Jordan	JO	**+0300**					
Kazakhstan	KZ 1	Aktau, Atyrau, Aktyubinsk, Uralsk					
		+0500					
	KZ 2	Almaty, Astana, Karaganda, Kokshetau, Kostanay, Kyzl-Orda, Petropavlovsk, Semipalatinsk, Shimkent Ust-Kamenogorsk, Zhezkazgan					
		+0600					

Country Name	Time Zone	Standard Variation	– – – DST Start – – – Time	Date	– – – DST End – – – Time	Date	DST Variation
Kenya	KE	**+0300**					
Kiribati	KI 1	Gilbert Islands					
		+1200					
	KI 2	Line Islands					
		+1400					
	KI 3	Phoenix Islands					
		+1300					
Korea, Democratic People's Republic of	KP	**+0900**					
Korea, Republic of	KR	**+0900**					
Kuwait	KW	**+0300**					
Kyrgyzstan	KG	**+0600**					
Lao People's Democratic Republic	LA	**+0700**					
Latvia	LV	**+0200**	0100	31MAR13	0100	27OCT13	+0300
			0100	30MAR14	0100	26OCT14	+0300
			0100	29MAR15	0100	25OCT15	+0300
Lebanon	LB	**+0200**	2200	30MAR13	2100	26OCT13	+0300
			2200	29MAR14	2100	25OCT14	+0300
			2200	28MAR15	2100	24OCT15	+0300
Lesotho	LS	**+0200**					
Liberia	LR	**+0000**					
Libya	LY	**+0100**	0000	29MAR13	0000	25OCT13	+0200
			0000	27MAR14	0000	30OCT15	+0200
			0000	28MAR14	0000	31OCT14	+0200
Liechtenstein	LI	**+0100**	0100	31MAR13	0100	27OCT13	+0200
			0100	30MAR14	0100	26OCT14	+0200
			0100	29MAR15	0100	25OCT15	+0200
Lithuania	LT	**+0200**	0100	31MAR13	0100	27OCT13	+0300
			0100	30MAR14	0100	26OCT14	+0300
			0100	29MAR15	0100	25OCT15	+0300
Luxembourg	LU	**+0100**	0100	31MAR13	0100	27OCT13	+0200
			0100	30MAR14	0100	26OCT14	+0200
			0100	29MAR15	0100	25OCT15	+0200
Macao (SAR, China)	MO	**+0800**					
Macedonia, The Former Yugoslav Republic of	MK	**+0100**	0100	31MAR13	0100	27OCT13	+0200
			0100	30MAR14	0100	26OCT14	+0200
			0100	29MAR15	0100	25OCT15	+0200
Madagascar	MG	**+0300**					
Malawi	MW	**+0200**					
Malaysia	MY	**+0800**					
Maldives	MV	**+0500**					
Mali	ML	**+0000**					
Malta	MT	**+0100**	0100	31MAR13	0100	27OCT13	+0200
			0100	30MAR14	0100	26OCT14	+0200
			0100	29MAR15	0100	25OCT15	+0200
Marshall Islands	MH	**+1200**					
Martinique	MQ	**-0400**					

Country Name	Time Zone	Standard Variation	DST Start Time	DST Start Date	DST End Time	DST End Date	DST Variation
Mauritania	MR	**+0000**					
Mauritius	MU	**+0400**					
Mayotte	YT	**+0300**					
Mexico	MX 1	Mexico (excluding Baja California Norte, Baja California Sur, Nayarit, Sinaloa, Sonora, Chihuahua)					
		-0600	0800	07APR13	0700	27OCT13	-0500
			0800	06APR14	0700	26OCT14	-0500
			0800	05APR15	0700	25OCT15	-0500
	MX 1A	Piedras Negras, Nuevo Laredo, Reynosa, Matamoros, Ciudad Acuna					
		-0600	0800	10MAR13	0700	03NOV13	-0500
			0800	09MAR14	0700	02NOV14	-0500
			0800	08MAR15	0700	01NOV15	-0500
	MX 2	Baja California Sur, Nayarit, Sinaloa, Chihuahua					
		-0700	0900	07APR13	0800	27OCT13	-0600
			0900	06APR14	0800	26OCT14	-0600
			0900	05APR15	0800	25OCT15	-0600
	MX 2A	Sonora					
		-0700					
	MX 2B	Ciudad Juarez					
		-0700	0900	10MAR13	0800	03NOV13	-0600
			0900	09MAR14	0800	02NOV14	-0600
			0900	08MAR15	0800	01AUG15	-0600
	MX 3	Baja California Norte					
		-0800	1000	07APR13	0900	27OCT13	-0700
			1000	06APR14	0900	26OCT14	-0700
			1000	05APR15	0900	25OCT15	-0700
	MX 3A	Tijuana, Mexicali					
		-0800	1000	10MAR13	0900	03NOV13	-0700
			1000	09MAR14	0900	02NOV14	-0700
			1000	08MAR15	0900	01NOV15	-0700
Micronesia (Federated States of)	FM 1	Micronesia (excluding Kosrae, Pohnpei)					
		+1000					
	FM 2	Kosrae, Pohnpei					
		+1100					
Moldova, Republic of	MD	**+0200**	0100	31MAR13	0100	27OCT13	+0300
			0100	30MAR14	0100	26OCT14	+0300
			0100	29MAR15	0100	25OCT15	+0300
Monaco	MC	**+0100**	0100	31MAR13	0100	27OCT13	+0200
			0100	30MAR14	0100	26OCT14	+0200
			0100	29MAR15	0100	25OCT15	+0200
Mongolia	MN	**+0800**					
Montenegro	ME	**+0100**	0100	31MAR13	0100	27OCT13	+0200
			0100	30MAR14	0100	26OCT14	+0200
			0100	29MAR15	0100	25OCT15	+0200
Montserrat	MS	**-0400**					

Country Name	Time Zone	Standard Variation	DST Start Time	DST Start Date	DST End Time	DST End Date	DST Variation
Morocco	MA	**+0000**	0200	29APR12	0200	30SEP12	+0100
			0200	28APR13	0200	29SEP13	+0100
			0200	24APR14	0200	28SEP14	+0100
Mozambique	MZ	**+0200**					
Myanmar	MM	**+0630**					
Namibia	NA	**+0100**	0100	02SEP12	2400	06APR13	+0200
			0100	01SEP13	2400	05APR14	+0200
			0100	07SEP15	2400	04APR15	+0200
Nauru	NR	**+1200**					
Nepal	NP	**+0545**					
Netherlands	NL	**+0100**	0100	31MAR13	0100	27OCT13	+0200
			0100	30MAR14	0100	26OCT14	+0200
			0100	29MAR15	0100	25OCT15	+0200
New Caledonia	NC	**+1100**					
New Zealand	NZ 1	New Zealand (excluding Chatham Islands)					
		+1200	1400	29SEP12	1400	06APR13	+1300
			1400	28SEP13	1400	05APR14	+1300
			1400	27SEP14	1400	04APR15	+1300
	NZ 2	Chatham Islands					
		+1245	1400	29SEP12	1400	06APR13	+1345
			1400	28SEP13	1400	05APR14	+1345
			1400	27SEP14	1400	04APR15	+1345
Nicaragua	NI	**-0600**					
Niger	NE	**+0100**					
Nigeria	NG	**+0100**					
Niue	NU	**-1100**					
Norfolk Island	NF	**+1130**					
Northern Mariana Islands (includes Mariana Islands except Guam)	MP	**+1000**					
Norway (excluding Svalbard and Jan Mayen)	NO	**+0100**	0100	31MAR13	0100	27OCT13	+0200
			0100	30MAR14	0100	26OCT14	+0200
			0100	29MAR15	0100	25OCT15	+0200
Oman	OM	**+0400**					
Pakistan	PK	**+0500**					
Palau	PW	**+0900**					
Palestine, State of	PS	**+0200**	2200	29MAR12	2100	27SEP12	+0300
			2200	28MAR13	2100	26SEP13	+0300
			2200	27MAR14	2100	25SEP14	+0300
Panama	PA	**-0500**					
Papua New Guinea	PG	**+1000**					
Paraguay	PY	**-0400**	0400	07OCT12	0300	14APR13	-0300
			0400	06OCT13	0300	13APR14	-0300
			0400	05OCT14	0300	12APR15	-0300
Peru	PE	**-0500**					
Philippines	PH	**+0800**					

Country Name	Time Zone	Standard Variation	DST Start Time	DST Start Date	DST End Time	DST End Date	DST Variation
Poland	PL	**+0100**	0100	31MAR13	0100	27OCT13	+0200
			0100	30MAR14	0100	26OCT14	+0200
			0100	29MAR15	0100	25OCT15	+0200
Portugal	PT 1	Mainland, Madeira					
		+0000	0100	25MAR12	0100	28OCT12	+0100
			0100	31MAR13	0100	27OCT13	+0100
			0100	30MAR14	0100	26OCT14	+0100
	PT 2	Azores					
		-0100	0100	31MAR13	0100	27OCT13	+0000
			0100	30MAR14	0100	26OCT14	+0000
			0100	29MAR15	0100	25OCT15	+0000
Puerto Rico	PR	**-0400**					
Qatar	QA	**+0300**					
Reunion	RE	**+0400**					
Romania	RO	**+0200**	0100	31MAR13	0100	27OCT13	+0300
			0100	30MAR14	0100	26OCT14	+0300
			0100	29MAR15	0100	25OCT15	+0300
Russian Federation	RU 1	Zone 1 (including Kaliningrad)					
		+0300					
	RU 2	Zone 2 (including Moscow, St. Petersburg, Astrakhan, Naryan Mar, Izhevsk, Samara)					
		+0400					
	RU 3	No locations in time zone at this time					
		+0500					
	RU 4	Zone 4 (including Perm, Nizhnevartovsk, Ekaterinburg)					
		+0600					
	RU 5	Zone 5 (including Omsk, Novosibirsk, Kemerovo)					
		+0700					
	RU 6	Zone 6 (including Norilsk, Kyzyl)					
		+0800					
	RU 7	Zone 7 (including Bratsk, Ulan-Ude)					
		+0900					
	RU 8	Zone 8 (including Chita, Yakutsk)					
		+1000					
	RU 9	Zone 9 (including Khabarovsk, Vladivostok, Yuzhno-Sakhalinsk)					
		+1100					
	RU 10	Zone 10 (including Magadan, Chukotka, Kamchatka)					
		+1200					
Rwanda	RW	**+0200**					
Saint Barthelemy	BL	**-0400**					
Saint Helena	SH	**+0000**					
Saint Kitts and Nevis	KN	**-0400**					
Saint Lucia	LC	**-0400**					
Saint Martin	MF	**-0400**					
Saint Pierre and Miquelon	PM	**-0300**	0500	10MAR13	0400	03NOV13	-0200
			0500	09MAR14	0400	02NOV14	-0200
			0500	08MAR15	0400	01NOV15	-0200

Country Name	Time Zone	Standard Variation	DST Start Time	DST Start Date	DST End Time	DST End Date	DST Variation
Saint Vincent and The Grenadines	VC	**-0400**					
Samoa	WS	**+1300**	1400	29SEP12	1400	06APR13	+1400
			1400	28SEP13	1400	05APR14	+1400
			1400	27SEP14	1400	04APR15	+1400
San Marino	SM	**+0100**	0100	31MAR13	0100	27OCT13	+0200
			0100	30MAR14	0100	26OCT14	+0200
			0100	29MAR15	0100	25OCT15	+0200
Sao Tome and Principe	ST	**+0000**					
Saudi Arabia	SA	**+0300**					
Senegal	SN	**+0000**					
Serbia	RS	**+0100**	0100	31MAR13	0100	27OCT13	+0200
			0100	30MAR14	0100	26OCT14	+0200
			0100	29MAR15	0100	25OCT15	+0200
Seychelles	SC	**+0400**					
Sierra Leone	SL	**+0000**					
Singapore	SG	**+0800**					
Sint Maarten	SX	**-0400**					
Slovakia	SK	**+0100**	0100	31MAR13	0100	27OCT13	+0200
			0100	30MAR14	0100	26OCT14	+0200
			0100	29MAR15	0100	25OCT15	+0200
Slovenia	SI	**+0100**	0100	31MAR13	0100	27OCT13	+0200
			0100	30MAR14	0100	26OCT14	+0200
			0100	29MAR15	0100	25OCT15	+0200
Solomon Islands	SB	**+1100**					
Somalia	SO	**+0300**					
South Africa	ZA	**+0200**					
South Sudan	SS	**+0300**					
Spain	ES 1	Mainland, Baleares, Melilla, Ceuta					
		+0100	0100	31MAR13	0100	27OCT13	+0200
			0100	30MAR14	0100	26OCT14	+0200
			0100	29MAR15	0100	25OCT15	+0200
	ES 2	Canary Islands					
		+0000	0200	31MAR13	0200	27OCT13	+0100
			0200	30MAR14	0200	26OCT14	+0100
			0200	29MAR15	0200	25OCT15	+0100
Sri Lanka	LK	**+0530**					
Sudan	SD	**+0300**					
Suriname	SR	**-0300**					
Svalbard and Jan Mayen	SJ	**+0100**	0100	31MAR13	0100	27OCT13	+0200
			0100	30MAR14	0100	26OCT14	+0200
			0100	29MAR15	0100	25OCT15	+0200
Swaziland	SZ	**+0200**					
Sweden	SE	**+0100**	0100	31MAR13	0100	27OCT13	+0200
			0100	30MAR14	0100	26OCT14	+0200
			0100	29MAR15	0100	25OCT15	+0200

Country Name	Time Zone	Standard Variation	– – – DST Start – – – Time	Date	– – – DST End – – – Time	Date	DST Variation
Switzerland	CH	**+0100**	0100	31MAR13	0100	27OCT13	+0200
			0100	30MAR14	0100	26OCT14	+0200
			0100	29MAR15	0100	25OCT15	+0200
Syrian Arab Republic	SY	**+0200**	2200	05APR12	2100	25OCT12	+0300
			2200	04APR13	2100	31OCT13	+0300
			2200	03APR14	2100	30OCT14	+0300
Tajikistan	TJ	**+0500**					
Tanzania, United Republic of	TZ	**+0300**					
Thailand	TH	**+0700**					
Timor-Leste	TL	**+0900**					
Togo	TG	**+0000**					
Tonga	TO	**+1300**					
Trinidad and Tobago	TT	**-0400**					
Tunisia	TN	**+0100**					
Turkey	TR	**+0200**	0100	31MAR13	0100	27OCT13	+0300
			0100	30MAR14	0100	26OCT14	+0300
			0100	29MAR15	0100	25OCT15	+0300
Turkmenistan	TM	**+0500**					
Turks and Caicos Islands	TC	**-0500**	0700	10MAR13	0600	03NOV13	-0400
			0700	09MAR14	0600	02NOV14	-0400
			0700	08MAR15	0600	01NOV15	-0400
Tuvalu	TV	**+1200**					
Uganda	UG	**+0300**					
Ukraine	UA	**+0200**	0100	31MAR13	0100	27OCT13	+0300
			0100	30MAR14	0100	26OCT14	+0300
			0100	29MAR15	0100	25OCT15	+0300
United Arab Emirates (Abu Dhabi, Dubai, Sharjah, Ras al Khaymah, Umm Alquwain, Al Ain, Al-Fujairah)	AE	**+0400**					
United Kingdom	GB	**+0000**	0100	31MAR13	0100	27OCT13	+0100
			0100	30MAR14	0100	26OCT14	+0100
			0100	29MAR15	0100	25OCT15	+0100
United States	US 1	Eastern Time Zone					
		-0500	0700	10MAR13	0600	03NOV13	-0400
			0700	09MAR14	0600	02NOV14	-0400
			0700	08MAR15	0600	01NOV15	-0400
	US 2	Central Time Zone					
		-0600	0800	10MAR13	0700	03NOV13	-0500
			0800	09MAR14	0700	02NOV14	-0500
			0800	08MAR15	0700	01NOV15	-0500
	US 3	Mountain Time Zone (excluding Arizona)					
		-0700	0900	10MAR13	0800	03NOV13	-0600
			0900	09MAR14	0800	02NOV14	-0600
			0900	08MAR15	0800	01NOV15	-0600
	US 3A	Mountain Time Zone - Arizona					
		-0700					

Country Name	Time Zone	Standard Variation	DST Start Time	DST Start Date	DST End Time	DST End Date	DST Variation
	US 4	Pacific Time Zone					
		-0800	1000	10MAR13	0900	03NOV13	-0700
			1000	09MAR14	0900	02NOV14	-0700
			1000	08MAR15	0900	01NOV15	-0700
	US 5	Alaska Time Zone					
		-0900	1100	10MAR13	1000	03NOV13	-0800
			1100	09MAR14	1000	02NOV14	-0800
			1100	08MAR15	1000	01NOV15	-0800
	US 6	Aleutian Time Zone					
		-1000	1200	10MAR13	1100	03NOV13	-0900
			1200	09MAR14	1100	02NOV14	-0900
			1200	08MAR15	1100	01NOV15	-0900
	US 6A	Hawaiian Time Zone					
		-1000					
United States Minor Outlying Islands	UM 1	Johnston Atoll					
		-1000					
	UM 2	Midway Islands					
		-1100					
	UM 3	Wake Island					
		+1200					
Uruguay	UY	**-0300**	0500	07OCT12	0400	10MAR13	-0200
			0500	06OCT13	0400	09MAR14	-0200
			0500	05OCT14	0400	08MAR15	-0200
Uzbekistan	UZ	**+0500**					
Vanuatu	VU	**+1100**					
Venezuela, Bolivarian Republic of	VE	**-0430**					
Viet Nam	VN	**+0700**					
Virgin Islands (British)	VG	**-0400**					
Virgin Islands (U.S.)	VI	**-0400**					
Wallis and Futuna Islands	WF	**+1200**					
Yemen	YE	**+0300**					
Zambia	ZM	**+0200**					
Zimbabwe	ZW	**+0200**					

Decoding

AD ..... Andorra
AE ..... United Arab Emirates
AF..... Afghanistan
AG ..... Antigua and Barbuda
AI ..... Anguilla
AL ..... Albania
AM ..... Armenia
AO ..... Angola
AR ..... Argentina
AS ..... American Samoa
AT..... Austria
AU ..... Australia
AW ..... Aruba
AX ..... Åland Islands
AZ..... Azerbaijan
BA ..... Bosnia and Herzegovina
BB ..... Barbados
BD ..... Bangladesh
BE ..... Belgium
BF..... Burkina Faso
BG ..... Bulgaria
BH ..... Bahrain
BI ..... Burundi
BJ ..... Benin
BL ..... Saint Barthelemy
BM ..... Bermuda
BN ..... Brunei Darussalam
BO ..... Bolivia, Plurinational State of
BQ ..... Bonaire, Saint Eustatius and Saba
BR ..... Brazil
BS ..... Bahamas
BT..... Bhutan
BW ..... Botswana
BY ..... Belarus
BZ..... Belize
CA ..... Canada
CC ..... Cocos (Keeling) Islands
CD ..... Congo, Democratic Republic of
CF ..... Central African Republic
CG ..... Congo
CH ..... Switzerland
CI..... Côte d'Ivoire
CK ..... Cook Islands
CL..... Chile
CM..... Cameroon
CN ..... China, People's Republic of
CO ..... Colombia
CR ..... Costa Rica
CU ..... Cuba
CV ..... Cape Verde
CW ..... Curacao
CX ..... Christmas Island (Indian Ocean)
CY ..... Cyprus
CZ ..... Czech Republic
DE ..... Germany
DJ ..... Djibouti
DK ..... Denmark
DM..... Dominica
DO ..... Dominican Republic
DZ ..... Algeria
EC ..... Ecuador
EE ..... Estonia
EG ..... Egypt
ER ..... Eritrea
ES ..... Spain (including Canary Islands, Melilla)
ET..... Ethiopia
FI ..... Finland
FJ ..... Fiji
FK..... Falkland Islands (Malvinas)
FM ..... Micronesia (Federated States of)
FO ..... Faroe Islands
FR ..... France
GA ..... Gabon
GB ..... United Kingdom
GD ..... Grenada
GE ..... Georgia
GF ..... French Guiana
GH ..... Ghana
GI ..... Gibraltar
GL ..... Greenland
GM ..... Gambia
GN ..... Guinea
GP ..... Guadeloupe
GQ..... Equatorial Guinea
GR ..... Greece
GT ..... Guatemala
GU ..... Guam
GW ..... Guinea-Bissau
GY ..... Guyana
HK ..... Hong Kong (SAR, China)
HN ..... Honduras
HR ..... Croatia

HT ..... Haiti
HU ..... Hungary
ID ..... Indonesia
IE ..... Ireland
IL ..... Israel
IN ..... India
IQ ..... Iraq
IR ..... Iran (Islamic Republic of)
IS ..... Iceland
IT ..... Italy
JM ..... Jamaica
JO ..... Jordan
JP ..... Japan
KE ..... Kenya
KG ..... Kyrgyzstan
KH ..... Cambodia
KI ..... Kiribati
KM ..... Comoros
KN ..... Saint Kitts and Nevis
KP ..... Korea, Democratic People's Republic of
KR ..... Korea, Republic of
KW ..... Kuwait
KY ..... Cayman Islands
KZ ..... Kazakhstan
LA ..... Lao People's Democratic Republic
LB ..... Lebanon
LC ..... Saint Lucia
LI ..... Liechtenstein
LK ..... Sri Lanka
LR ..... Liberia
LS ..... Lesotho
LT ..... Lithuania
LU ..... Luxembourg
LV ..... Latvia
LY ..... Libya
MA ..... Morocco
MC ..... Monaco
MD ..... Moldova, Republic of
ME ..... Montenegro
MF ..... Saint Martin
MG ..... Madagascar
MH ..... Marshall Islands
MK ..... Macedonia, The Former Yugoslav Republic of
ML ..... Mali
MM ..... Myanmar
MN ..... Mongolia
MO ..... Macao (SAR, China)
MP ..... Northern Mariana Islands
MQ ..... Martinique
MR ..... Mauritania
MS ..... Montserrat
MT ..... Malta
MU ..... Mauritius
MV ..... Maldives
MW ..... Malawi
MX ..... Mexico
MY ..... Malaysia
MZ ..... Mozambique
NA ..... Namibia
NC ..... New Caledonia
NE ..... Niger
NF ..... Norfolk Island
NG ..... Nigeria
NI ..... Nicaragua
NL ..... Netherlands
NO ..... Norway
NP ..... Nepal
NR ..... Nauru
NU ..... Niue
NZ ..... New Zealand
OM ..... Oman
PA ..... Panama
PE ..... Peru
PF ..... French Polynesia
PG ..... Papua New Guinea
PH ..... Philippines
PK ..... Pakistan
PL ..... Poland
PM ..... Saint Pierre and Miquelon
PR ..... Puerto Rico
PS ..... Palestine, State of
PT ..... Portugal
PW ..... Palau
PY ..... Paraguay
QA ..... Qatar
RE ..... Reunion
RO ..... Romania
RS ..... Serbia
RU ..... Russian Federation
RW ..... Rwanda
SA ..... Saudi Arabia
SB ..... Solomon Islands
SC ..... Seychelles
SD ..... Sudan
SE ..... Sweden

SG ..... Singapore
SH ..... Saint Helena
SI ..... Slovenia
SJ ..... Svalbard and Jan Mayen
SK ..... Slovakia
SL ..... Sierra Leone
SM ..... San Marino
SN ..... Senegal
SO ..... Somalia
SR ..... Suriname
SS ..... South Sudan
ST ..... Sao Tome and Principe
SV ..... El Salvador
SX ..... Sint Maarten
SY ..... Syrian Arab Republic
SZ ..... Swaziland
TC ..... Turks and Caicos Islands
TD ..... Chad
TG ..... Togo
TH ..... Thailand
TJ ..... Tajikistan
TL ..... Timor-Leste
TM ..... Turkmenistan
TN ..... Tunisia
TO ..... Tonga
TR ..... Turkey
TT ..... Trinidad and Tobago
TV ..... Tuvalu
TW ..... Chinese Taipei
TZ ..... Tanzania, United Republic of
UA ..... Ukraine
UG ..... Uganda
UM ..... United States Minor Outlying Islands
US ..... United States
UY ..... Uruguay
UZ ..... Uzbekistan
VC ..... Saint Vincent and The Grenadines
VE ..... Venezuela, Bolivarian Republic of
VG ..... Virgin Islands (British)
VI ..... Virgin Islands (U.S.)
VN ..... Viet Nam
VU ..... Vanuatu
WF ..... Wallis and Futuna Islands
WS ..... Samoa
YE ..... Yemen
YT ..... Mayotte
ZA ..... South Africa
ZM ..... Zambia
ZW ..... Zimbabwe
ZZ ..... Fictitious

APPENDIX G
TRAFFIC RESTRICTION CODES TABLE

The next pages represent a complete table of Traffic Restriction Codes and their associated appropriate texts. It gives a general definition of each code and detailed information on how the Airline Guides and Computer Reservations Systems will publish and display restricted segments in both passenger and cargo applications.

Traffic Restrictions apply on a segment basis. The codes in this table condense the expression of the conditions under which traffic may be enplaned at the board point and/or deplaned at the off point of the segment to which the restriction is applied. Direct flights should be published and displayed for all restricted segments except restrictions **A, I, K, N, O** and **Y**, and additionally restrictions **M, Q, T, V, W** and **X** in cargo/mail applications, as no local traffic is allowed.

Any **connection** which satisfies the applicable restriction should not have the appropriate text displayed.

When a Traffic Restriction condition is applicable to a connection there is no distinction between the airports within a Metropolitan Area. The Traffic Restriction condition is deemed to be applicable to all airports.

Example:

AA 123	FRA ***JFK***	Traffic Restriction Q (*Intl Online Connection or Stopover Traffic*)
AA 456	***EWR*** PHX	

JFK & EWR are part of NYC, but a connection between them should still be treated as online.

Traffic restrictions can be specified to apply only at the board point or the off point by using data elements ‘Traffic Restriction Code Qualifier at Board Point’ and ‘Traffic Restriction Code Qualifier at Off Point’ respectively, or can be expanded upon by using data element ‘Traffic Restriction Code Information—Free Format’.

Traffic Restrictions which restrict carriage to Online Connecting Traffic mean that the Flight Designators of the flights involved in a connection must both use the same Airline Designator for the connection to be valid. The same rule applies when carriage is restricted to Stopover Traffic—meaning that a valid Stopover can only be Online.

Default: *In the absence of any information to the contrary, it is assumed that any Traffic Restriction stated applies to all forms of traffic (passenger, cargo, mail) at Board and/or Off Point*.

Traffic Restriction Code	Meaning and Description	Display of Restricted Direct Flight Segment	Construction of Transfer Connections Involving Restricted Flight Segment
A	NO LOCAL TRAFFIC No traffic may be enplaned at the board point for carriage to, and subsequent deplaning at the off point. See also Restriction I.	No display.	Not allowed.
B	LOCAL TRAFFIC ONLY No restriction applies, but the segment is not to be used as part of any published connection.	Normal display.	Not allowed.
C	LOCAL AND DOMESTIC CONNECTING TRAFFIC ONLY No restriction applies, but the segment is not to be used as connections. part of any published connection where the preceding connecting segment, or where the following connecting segment, is an international flight segment.	Normal display.	Construct only Domestic connections.
D	QUALIFIED INTERNATIONAL ONLINE CONNECTING OR STOPOVER TRAFFIC ONLY The **'D'** restriction equals the **'Q'** restriction in that it restricts the **segment** to international online connecting and international online stopover traffic only. Additionally, the **trip** will be invalid if the **'D', 'E'** or **'G'** restriction exists into **and** out of all online connect points for the carrier(s) filing the restriction. → For further guidance, see also Appendix H: Traffic Restriction Codes D/E/G.	*Passenger applications:* Displayed, but must be accompanied by appropriate text, eg. INTL ONLINE CONNEX/STPVR TFC ONLY *Cargo/Mail applications:* No display.	Construct only International Online connections except if the **'D', 'E'** or **'G'** restriction exists into **and** out of **all** online connect points for the carrier(s) filing the restriction.
E	QUALIFIED ONLINE CONNECTING OR STOPOVER TRAFFIC ONLY The **'E'** restriction equals the **'X'** restriction in that it restricts the **segment** to online connecting and online stopover traffic only. Additionally, the **trip** will be invalid if the **'D', 'E'** or **'G'** restriction exists into **and** out of **all** online connect points for the carrier(s) filing the restriction. → For further guidance, see also Appendix H: Traffic Restriction Codes D/E/G.	*Passenger applications:* Displayed, but must be accompanied by appropriate text, eg. ONLINE CONNEX/STPVR TFC ONLY *Cargo/Mail applications:* No display.	Construct only Online connections except if the **'D', 'E'** or **'G'** restriction exists into **and** out of **all** online connect points for the carrier(s) filing the restriction.
F	LOCAL AND ONLINE CONNECTING TRAFFIC ONLY. No restriction applies, but the segment is not to be used as part of any published interline connecting segment.	Normal display	Construct only Online connections
G	QUALIFIED ONLINE CONNECTING TRAFFIC ONLY. The **'G'** restriction equals the **'Y'** restriction in that it restricts the **segment** to online connecting traffic only. Additionally, the **trip** will be invalid if the **'D', 'E'** or **'G'** restrictions exist into and **and** out of **all** online connect points for the carrier(s) filing the restriction. → For further guidance, see also Appendix H: Traffic Restriction Code D/E/G.	No display	Construct only Online connections except if the **'D', 'E'** or **'G'** restriction exists into **and** out of **all** online connect points for the carrier(s) filing the restriction.
H	SEGMENT NOT TO BE DISPLAYED No restriction applies, but the segment is not to be displayed or used as part of any published connection.	No display.	Not allowed.
I	TECHNICAL LANDING Due to non-commercial (technical) landing no traffic may be enplaned at the board point for carriage to, and subsequent deplaning at the off point. All segments, where the board point and/or off point is a technical stop, should be restricted using Code I.	No display.	Not allowed.
K	CONNECTING TRAFFIC ONLY Carriage is limited to connecting traffic only. The segment must have at least one connection.	No display.	Construction allowed.
M	INTERNATIONAL ONLINE STOPOVER TRAFFIC ONLY Carriage is limited to international online stopover traffic only; traffic may be carried if all conditions are satisfied. In respect of carriage of cargo and/or mail, this code is interpreted as Traffic Restriction Code **A**.	*Passenger applications:* Displayed, but must be accompanied by appropriate text, eg. `INTL ONLINE STPVR TFC ONLY` *Cargo/Mail applications:* No display.	Not allowed.
N	INTERNATIONAL CONNECTING TRAFFIC ONLY Carriage is limited to international connecting traffic only. The segment must have at least one international connection. All connecting segments must be from/to a station **in another country**.	No display.	Construct only International connections.
O	INTERNATIONAL ONLINE CONNECTING TRAFFIC ONLY Carriage is limited to international online connecting traffic only. The segment must have at least one international online connection. All connecting segments must be from/to a station **in another country** with the **same airline designator**.	No display.	Construct only International Online connections.
Q	INTERNATIONAL ONLINE CONNECTING OR STOPOVER TRAFFIC ONLY Carriage is limited to international online connecting or international online stopover traffic only; traffic may be carried if either set of conditions is satisfied. In respect of carriage of cargo and/or mail, this code is interpreted as Traffic Restriction Code **O**.	*Passenger applications:* Displayed, but must be accompanied by appropriate text, eg. `INTL ONLINE CONNEX/STPVR TFC ONLY` *Cargo/Mail applications:* No display.	Construct only International Online Connections.

Traffic Restriction Code	Meaning and Description	Display of Restricted Direct Flight Segment	Construction of Transfer Connections Involving Restricted Flight Segment
T	ONLINE STOPOVER TRAFFIC ONLY Carriage is limited to online stopover traffic only. The segment must have at least one online stopover. All stopover segments must be online. In respect of carriage of cargo and/or mail, this code is interpreted as Traffic Restriction Code **A**.	*Passenger applications:* Displayed, but must be accompanied by appropriate text, eg. `ONLINE STPVR TFC ONLY` *Cargo/Mail applications:* No display.	Not allowed.
V	CONNECTING OR STOPOVER TRAFFIC ONLY Carriage is limited to connecting or stopover traffic only; traffic may be carried if either condition is satisfied. In respect of the carriage of cargo and/or mail, this code is interpreted as Traffic Restriction Code **K**.	*Passenger applications:* Displayed, but must be accompanied by appropriate text, eg. `CONEX/STPVR TFC ONLY` *Cargo/Mail applications:* No display.	Construction allowed.
W	INTERNATIONAL CONNECTING OR STOPOVER TRAFFIC ONLY Carriage is limited to international connecting or international stopover traffic only; traffic may be carried if either set of conditions is satisfied. In respect of carriage of cargo and/or mail, this code is interpreted as Traffic Restriction Code **N**.	*Passenger applications:* Displayed, but must be accompanied by appropriate text, eg. `INTL CONEX/STPVR TFC ONLY` *Cargo/Mail applications:* No display.	Construct only International connections.
X	ONLINE CONNECTING OR STOPOVER TRAFFIC ONLY Carriage is limited to online connecting or online stopover traffic only; traffic may be carried if either set of conditions is satisfied. In respect of carriage of cargo and/or mail, this code is interpreted as Traffic Restriction Code **Y**.	*Passenger applications:* Displayed, but must be accompanied by appropriate text, eg. `ONLINE CONEX/STPVR TFC ONLY` *Cargo/Mail applications:* No display.	Construct only Online connections.
Y	ONLINE CONNECTING TRAFFIC ONLY Carriage is limited to online connecting traffic only. The segment must have at least one online connection. All connecting segments must be online.	No display.	Construct only Online connections.
Z	Traffic restrictions do not apply equally to passenger/cargo/mail *and/or* Multiple traffic restrictions apply. *Refer to associated Data Element Identifiers* `170 through 173`.	Not applicable.	Not applicable.

APPENDIX H
EXPLANATORY NOTES ON SSIM APPLICATIONS

General

The objective of the Standard Schedules Information Manual is to communicate information relating to a flight or service without any ambiguity.

Apart from the essential information, like Flight Designators, Day(s) and Period of Operation, Aircraft Type, routing and timings, additional information can be added for operational and reservations purposes.

Each item has been allocated a particular position in the schedule information, and is called a 'data element'.

Each data element and its relationship to others with a common subject have been defined in Chapter 2. For the implementation and the proper use of SSIM, it is important to be aware of such relationships.

The objective of this Appendix is to explain and guide the treatment of particular cases that require special attention or handling.

It is assumed, however, that the definition of each data element used in this Appendix is known or can be referenced in Chapter 2.

Contents

Ad Hoc Schedules Messages in the Operations Control Environment
- Schedule Information Processing
- Operational Situations

Aircraft Seating Description
- Aircraft Configuration/Version (ACV)
- Passenger Reservations Booking Designator (PRBD)

Clearances/Movement Advices for Flights Partly out of Scheduling Season

Commercial Agreements Between Two or More Airlines
- Wet Lease
- Joint Operation
- Operating Airline Disclosure—Shared Airline or Wet Lease Designation (DEI 9)
- Operating Airline Disclosure—Code Share (DEI 2)
- Code Share—Multiple Names
- Code Sharing: Code Sharing and Wet Lease Handling in Chapters 4, 5 and 7
- Examples for:
  - Chapters 4 and 5 Applications
  - Chapter 7 Application

Daylight Saving Time
Defaults
Duplicate Flight Legs
Electronic Ticketing Information
- Carrier Defaults
- Electronic Ticketing for Segments

Fictitious Points
Legs/Segments
- Segment Override Data Elements
- Segment Default Assumptions
  - Electronic Ticketing Information
  - Passenger Reservations Booking Designator

Minimum Connecting Time (MCT)
- Definition
- General
- Designation of MCT Coordinator In Each Airline
- Changes To MCTs
- Bilateral MCT Agreements
- Establishing MCT Exceptions

Partial Cancellation of Flights
Partnership Specification
- Direct Flights
- Single Connections
- Double Connections

Plane Change Without Aircraft Type Change
Time Mode
- UTC/LT Relationship
- UTC Flight Number Duplication at Origin or Individual Stations
- UTC Flight Number Duplication due to Daylight Saving Time
- Local Date Flight Number Duplication
- Summary

Traffic Restriction Code D, E and G
- Online Connection Scenario
- Interline Connection Scenario

Traffic Restriction Code Qualifiers 710-712
Train Stations at Multi-Terminal Airports
Withdrawal of Ad Hoc Schedule Changes
- ASM Withdrawal Indicator
- Change Reason Code RTNS

AD HOC Schedules Messages in the Operations Control Environment

References in this section are to schedule updates using ASMs.

The implementation of Ad Hoc Schedules Messages (ASM) in on-the-day Operations Control Environment is increasing. The subsequent processing of these messages in both in-house and external applications such as reservations, cargo and departure control applications, have created a number of conflicts between the ideal scheduling philosophy of SSIM and real operational situations.

Proposals for the resolution of the most typical situations are included below.

It should be noted that, for a clear understanding by human beings of the operational decisions published by means of an ASM, the actions must be obvious and cannot be hidden behind any technical solutions made possible by SSIM rules.

Schedule Information Processing

Operations Control decision makers must be aware of the basic restrictions that are to be followed to enable other systems to process their scheduling information:

- no duplicate Flight Number/date from Origin Station in UTC;
- no duplicate Flight Number/date from Origin Station in local time;
- no duplicate departure of the same Flight Number at the same station on the same local date (except in case of diversion/forced return);
- no duplicate arrival of the same Flight Number at the same station on the same local date (except in case of diversion/forced return);

(all duplications refer to schedule time and **not** to actual or estimated times as reported by Movement Messages).

Operational Situations

Proposed solutions for typical operational situations:

- Cancellation of part of a flight by a CNL sub-message:
  - — cancellation of the first leg where the second leg departs with a date variation (removal of the first leg would cause a change of Flight Identifier);
  - — cancellation of a middle leg (removal of this leg would break the routing continuity of the flight).

The solution is a cancel action that leaves the leg in existence (commonly called FLIFO Cancel). The reinstatement of such a cancelled leg to operating status is possible by an RIN sub-message or by an RPL sub-message for the whole flight or by a RRT sub-message starting with the departure Station of the cancelled middle leg as the point of rerouting.

For coordination purposes, previously cancelled slots cannot be assumed to be available for reinstatement, but must be re-applied for.

- Diversion/rerouting of a flight:

  The diversion of a flight with a pending operational decision as to its continuation (that could potentially break the routing continuity) has no equivalent scheduling action.

  After the decision to terminate the flight or to continue the flight to its intended or next/final destination with a new schedule, the RRT sub-message should be used starting with the departure Station of the diverted leg as the point of rerouting.

The following special cases may require special solutions in a receiving application:

— diversion to current leg departure Station (return from airborne/forced return) i.e. routing AAA-BBB becomes AAA-AAA-BBB;

  The solution could be to accept the second departure as a revised departure time from that Station ignoring the newly created leg AAA-AAA

— diversion/rerouting to a previous leg departure Station i.e. routing AAA-BBB-CCC-DDD becomes AAABBB-CCC-BBB-DDD.

Currently most reservations systems cannot handle this situation.

Aircraft Seating Description

This section describes the relationship between the **Aircraft Configuration/Version** and the **Passenger Reservations Booking Designator** and their associated information.

The seating layout of an aircraft may be categorised from either a technical/operational (physical layout) aspect or a sales-oriented (reservations) aspect.

As these need not be identical, two different data elements exist within SSIM to specify the ***physical layout*** description by means of the **Aircraft Configuration/Version (ACV)** and ***reservations*** description by means of the **Passenger Reservations Booking Designator (PRBD)**.

Aircraft Configuration/Version (ACV)

The ACV specifies the different physical seats on an aircraft irrespective of how they are sold on a flight. It is purely aircraft-related and does not change unless a physical re-arrangement of seats takes place.

The ACV is always leg-oriented, and uses SSIM Class of Service Codes for specification.

In general, the number of seats fitted in the aircraft as specified within the ACV is also the number of seats available for sale unless they are to be reduced by **'Blocked Seats'** in each Class of Service, e.g. crew-rest seats or stretcher.

If the saleable seating is less than the fitted configuration, Data Element Identifier 104 (Blocked Seats and/or Unit Load Devices) should be used to explain the difference.

The ACV and its associated data are mainly used in the technical areas, in operations, and for seat selection within check-in systems.

The ACV is also used to specify the cargo capacity on an aircraft, e.g. containers and/or pallets, or to refer to an aircraft version reference code assigned by the airline.

Passenger Reservations Booking Designator (PRBD)

The PRBD specifies for each leg how the saleable seats on the aircraft will be used, i.e. which seats will be sold to a certain passenger category.

The codes for the specification of these reservation categories may therefore differ from those used for the physical description of the ACV if this is required for selling/reservations purposes.

It is important to note that the PRBD may change from leg to leg **without** changing the ACV.

The following items of information are associated with the PRBD and therefore use the same booking class codes for specification:

- the data element **'Meal Service Note'** defines the appropriate meals served in each class, and,
- the data element **'Passenger Reservations Booking Modifier'** (PRBM) indicates applicable fare modifications, e.g. night class.

It is assumed that the information given by the PRBD, Meal Service Note, and the PRBM for each individual leg on a multi-leg flight also applies to all possible city pair combinations of these legs provided they are in consecutive order and that the information provided is identical.

In all other cases, the appropriate city pair information must be stated using the respective segment override data elements for clarification.

These are:

- ‘Passenger Reservations Booking Designator Segment Override’ (Data Element Identifier 101);
- ‘Passenger Reservations Booking Modifier Segment Override’ (Data Element Identifier 102); and
- ‘Meal Service Segment Override’ (Data Element Identifier 111).

In cases where both ACV and PRBD are used, the Meal Service Note shall apply to the PRBD.

The example below shows the ACV and PRBD with their associated data elements on a flight AMS-LHR-JFK

Explanation

Technical/Operational View

Aircraft Compartment/ Class of Service Code

ACV

F30C70M300

The aircraft (747) has 30 First, 70 Business and 300 Economy Class seats physically on board, and this ACV does not change unless other seats will technically be installed or seats are removed.

Blocked Seats 1 (0)

Blocked Seats 2 C3M7

For the specific flight AMS-LHR-JFK there are 3 Business and 7 Economy Class seats blocked, e.g. for crew members or a stretcher, on the **leg** LHR-JFK only.

— Aircraft (747) ---- AMS | Fitted seats 400 Saleable seats 400 | LHR | Fitted seats 400 Saleable seats 390 | JFK --

This results in 400 seats available for sale on the leg AMS-LHR and 390 on the leg LHR-JFK.

Reservations Booking Code

PRBD (Leg 1) (F30C100M270)

PRBD (Leg 2) P30C67M293)

Out of the 400 seats on the leg AMS-LHR, 30 seats will be sold as F-Class seats, 100 seats as C-Class and 270 seats as M-Class. For the leg LHR-JFK, the 390 seats are sold as 30 P-Class, 67 C-Class and 293 M-Class.

Meal Service Note 1 (FB/CS/MC)

Meal Service Note 2 (PL/CL/MS)

Meal service on leg AMS-LHR is Breakfast (B) in F-Class, Snack (S) in C-Class, and Complimentary Beverages (C) in M-Class. On leg LHR-JFK F- and C-Class passengers are served Lunch (L) while M-Class passengers are served a snack.

PRBM (Leg 1) (CO)

On the leg AMS-LHR only an Off-Peak fare applies for the Business Class tariff.

PRBD Segment Override (PCY)

For those passengers travelling from AMS to JFK, the seats will be sold as P-Class, C-Class and Y-Class, which means that F and M are not available for sale on the segment but only on the individual legs.

Meal Service Segment Override PBL/CCL/YCS

Although a snack is served for C-Class passengers travelling AMS-LHR, only Complimentary Beverages are offered to those C-Class passengers boarding the flight in AMS and deplaning at JFK in addition to Lunch LHR-JFK, P-Class and Y-Class meals also have to be specified in order to synchronize Class codes with PRBD Segment Override.

PRBM Segment Override (CO)

In addition to the Off-Peak fare applicable on the leg AMS-LHR in C-Class, there is also an Off-Peak fare applicable for the passenger travelling on the segment AMS-JFK in C-Class.

Sales/Reservation View

Clearances/Movement Advices for Flights Partly Out of Scheduling Season

Scheduling Seasons are predetermined, and, as such, all Coordinators and Facilitators handle slot timings in accordance within Season date limits applicable to their respective airports.

At the changeover between Seasons, some services commence their final trip(s) within the current season on the Friday and/or the Saturday and complete them on the first days of the next Season, i.e. either the Sunday and/or the Monday.

If the timings at any airport are not identical for both scheduling Seasons, it becomes necessary to submit a separate clearance/advice for this (these) itineraries in the new Season at the time SCRs/SMAs are submitted for the next IATA Slot Conference.

Example (Times UTC):

		Scheduling Season		**Sigle Date views of changeover flights**			**SCR/SMA for individual airports S01/W01**			
		S01	W01							
		25MAR01	28OCT01							
		27OCT01	30MAR02	26OCT01	27OCT01					
		QF2	QF2	QF2	QF2					
		1234567	1234567	5	6					
LHR	D	2115	2045	S01	S01	LHR	S01	25MAR	27OCT	2115
							W01	28OCT	30MAR	2045
BAH	A	0240+1	0305+1	S01	W01	BAH	S01	26MAR	27OCT	0240/0355
BAH	D	0355+1	0420+1	S01	W01		W01	28OCT	28OCT	0240/0355
							W01	29OCT	30MAR	0305/0420
SIN	A	1245+1	1215+1	S01	W01	SIN	S01	26MAR	27OCT	1245/1405
SIN	D	1405+1	1410+1	S01	W01		W01	28OCT	28OCT	1245/1405
							W01	29OCT	30MAR	1215/1410
SYD	A	2125+1	2120+1	S01	W01	SYD	S01	26MAR	27OCT	2125/2300
SYD	D	2300+1	2250+1	S01	W01		W01	28OCT	28OCT	2115/2300
							W01	29OCT	30MAR	2120/2250
MEL	A	0020+2	0015+2	W01	W01	MEL	S01	27MAR	27OCT	0020
							W01	28OCT	29OCT	0020
							W01	30OCT	30MAR	0015

Commercial Agreements Between Two or More Airlines

This Section includes procedures to notify data recipients of the existence of the following agreements.

- Wet Lease
- Joint Operation
- Operating Airline Disclosure—Shared Airline or Wet Lease Designation (DEI 9)
- Operating Airline Disclosure—Code Share (DEI 2)

Additional examples have been provided for:

- Describing Code Share & Wet Lease Situations
- Using Multiple names when a combination of Code Share and Wet Lease situations exist

Wet Lease

A wet lease operation is one where the aircraft is not part of the fleet of the Administrating Carrier and/or the crew is not employed by that carrier.

The aircraft/crew lessor or leasing carrier may be disclosed to potential passengers.

Where it is a legal requirement, it is mandatory to disclose a Wet Lease Airline.

The method used for disclosing a Wet Lease is the same as that used for Shared Airline Designation.

Use data elements Aircraft Owner, Cabin Crew Employer, Cockpit Crew Employer as appropriate.

→ Refer to 'Operating Airline Disclosure–Shared Airline or Wet Lease Designation (DEI 9)' below.

→ Refer to 'Operating Airline Disclosure–Shared Airline or Wet Lease Designation (DEI 9)' and 'Operating Airline Disclosure–Code Share (DEI 2)' below for how to handle cases of combined Wet Lease and Code Share.

Joint Operation

Joint Operation is where two or more carriers jointly operate a service using one aircraft on any one leg of a flight. There is one Administrating Carrier and one Reservations Control Carrier with one Flight Designator irrespective of the number of participating carriers.

Use data element Joint Operation Airline Designators to specify a joint operation of flights or legs of flights.

To specify a Joint Operation on Segments consisting of more than one leg (multi-leg segments) requires the use of Data Element Identifier 125 (Joint Operation Airline Designators Segment Override) in Chapter 4, 5 and 7.

Example:

Carrier XA operates a flight 901 over itinerary AAA-BBB-CCC-DDD.

The leg AAA-BBB is a joint operation with carrier XB, segment BBB-DDD is jointly operated with carrier XC.

The Flight Designator of the service will be XA901.

The Joint Operation Airline Designators for the leg AAA-BBB will be XA/XB (XA is the Reservations Control Carrier and is listed first).

Application	Example	Segment
Chapters 4,5	1/XA/XB	AAABBB
Chapter 7	XAØXBØØØØ	AAABBB

The Joint Operation Airline Designators for the segment BBB-DDD will be XA/XC specified by use of Data Element Identifier 125 (XA is the Reservations Control Carrier and is listed first).

Application	Example	Segment
Chapters 4,5	125/XA/XC	BBBDDD
Chapter 7	XAØXCØØØØ	BBBDDD

The Data Element Identifier 125 (Joint Operation Airline Designators Segment Override) can also be used to indicate the absence of a Joint Operation on a Segment by overriding the given leg information with a single Airline Designator.

Example:

Carrier XA operates a flight 901 over itinerary AAA-BBB-CCC.

The legs AAA-BBB and BBB-CCC are jointly operated with carrier XB but on the segment AAA-CCC no Joint Operation is defined.

The Joint Operation Airline Designators for the legs AAA-BBB and BBB-CCC will be XA/XB (XA is the Reservations Control Carrier and is listed first) with the implied XA/XB for the segment AAA-CCC overridden by the single Airline Designator XA specified by use of Data Element Identifier 125.

Application	Example	Segment
Chapters 4,5	1/XA/XB 1/XA/XB 125/XA	AAABBB BBBCCC AAACCC
Chapter 7	XAØXBØØØØ XAØXBØØØØ XAØØØØØØØ	AAABBB BBBCCC AAACCC

General

In all cases of Operating Airline Disclosure where multiple agreements might be in place, Airlines need to verify exactly what details they need to disclose and the type of code share agreement operated.

It may be that the type of code share agreement could require different data elements to those data elements needed to disclose the operator of the service.

Questions that should be asked:

- What is the type of code share agreement I have in place
- Is this a Code Share or Wet Lease
- Who is my code share partner
- Is my partner using a designator
- Is there a need to disclose the operator of the service when the operator is now different to the administrating carrier.

Operating Airline Disclosure—Shared Airline or Wet Lease Designation

Operating Airline Disclosure—Shared Airline or Wet Lease operations identify where one carrier operates flights or flight legs on behalf of another carrier using the Airline Designator of the Administrating Carrier.

Such agreements are prevalent where a smaller commuter airline provides feeder service to a carrier's hub, or gateway, and in franchise style operations.

— The Administrating carrier's Airline Designator is exclusively used to market the flights and also denotes that it is the Administrating Carrier and Reservations Control Carrier;

— The flights will not be supplied as flights of the Operating Carrier;

— It is intended that one flight entry under the Administrating Carrier designator will be displayed in receiving systems and GDS displays.

Note: *Operating Airline Disclosure—Shared Airline or Wet Lease Designation data will not necessarily be applied to all legs of a flight. Hence recipients of this data must take notice a flight may contain some legs operated under a Operating Airline Disclosure—Shared Airline or Wet Lease Designation agreement, and some that are not.*

Use data element Operating Airline Disclosure—Shared Airline or Wet Lease Designation to specify the carrier actually operating the service.

Example:

Carrier BN (Corporate Express Airways) operates a service AAA-BBB on behalf of carrier MF under the terms of an Operating Airline Disclosure—Shared Airline or Wet Lease Designation agreement. Carrier MF is both the Administrating Carrier and the Reservations Control Carrier.

Application (Carrier MF)	Example	Aircraft Owner	Leg
Chapters 4,5	9/BN		AAA/BBB
Chapter 7	S	BNØ	AAA/BBB

If Corporate Express Airways does not have an IATA assigned Airline Designator, Data Element Identifier 127 must be used to identify the operator in Chapters 4, 5 and 7.

If the operator of the Operating Airline Disclosure—Shared Airline or Wet Lease Designation service wants to provide *additional* text to its incorporated/registered name for marketing purposes, it can be specified using Data Element Identifier 127 using plain text after the Airline Designator and separated by a slash (/) (Chapters 4, 5 and 7):

Application (Carrier MF)	Example	Data Element Identifier 127	Leg
Chapters 4,5	9/X	127//CORPORATE EXPRESS AIRWAYS or 127/BN/CORPORATE EXPRESS AIRWAYS FRANCHISE	AAA/BBB
Chapter 7	X	127AAABBB/CORPORATE EXPRESS AIRWAYS Or 127/AAABBB/BN/CORPORATE EXPRESS AIRWAYS FRANCHISE	AAA/BBB

Note: *Shared Airline Designation data will not necessarily apply to all legs of a flight. Hence, recipients of this data must take notice that segments of such a flight may contain some legs operated under a Shared Airline Designation agreement and others that are not.*

Operating Airline Disclosure—Code Share

Operating Airline Disclosure—Code Share agreements allow seats/space to be sold by one or more other airlines with each airline using its own flight designator to provide a service.

More than one Flight Designator will be used to display these services for a single operating flight. This will include at least one service under the Airline Designator of the Administrating Carrier, and at least one service under the Airline Designator of another ‘non-operational’ flight.

Each participant will be a Reservations Control Carrier for the seats/space sold under its own Flight Designator and is responsible for the information passed to Reservations Systems and other recipients of such flight data.

It is, therefore, possible that Flight Number, Aircraft Type Code (Aircraft Group code instead of Aircraft Type Code), Class of Service Codes and, in certain respects, arrival/departure times *may* vary carrier to carrier amongst participants.

Non-operational carriers must use the Operating Airline Disclosure—Code Share data element to specify the actual operating carrier.

Cross References DEI 10/50

It is very important that all participating carriers provide an explicit cross-reference. This is provided by use of Data Element Identifiers 10 & 50 Duplicate Leg Cross Reference:

DEI 10 Duplicate Leg Cross Reference—Duplicate Leg Identification;

DEI 50 Duplicate Leg Cross Reference—Operational Leg Identification.

Example 1:

Carrier DC Fly High Airways operates a flight DC 810 over itinerary AAA-BBB-CCC.

Carrier DC allows a number of seats on leg BBB-CCC to be sold by carrier MF who sells these seats under Flight Designator MF 2810.

The Operating Airline Disclosure—Code Share details on the leg BBB-CCC will show DC as the operating carrier in data sent to interested parties by MF (the non-operational carrier) for flight MF 2810.

Application (Carrier MF)	Example	Aircraft Owner	Leg
Chapters 4,5	2/DC	3/DC	BBB/CCC
Chapter 7	L	DCØ	BBB/CCC

If Fly High Airways does not have an IATA assigned Airline Designator, Data Element Identifier 127 must be used to identify the operator in Chapters 4, 5 and 7.

If the operator of the Code Share service wants to provide *additional* text to its incorporated/registered name for marketing purposes, it can be specified using Data Element Identifier 127 using plain text after the Airline Designator and separated by a slash (/) (Chapters 4, 5 and 7).

Application (Carrier MF)	Example	Data Element Identifier 127	Leg
Chapters 4,5	2/X	127//FLY HIGH AIRWAYS or 127/DC/FLY HIGH AIRWAYS SHUTTLE	BBB/CCC
Chapter 7	Z	127BBBCCC/FLY HIGH AIRWAYS or 127BBBCCCDC/FLY HIGH AIRWAYS SHUTTLE	BBB/CCC

DC as the Administrating Carrier must also specify Data Element Identifier 10 and MF must specify Data Element Identifier 50 for leg BBB-CCC in Chapters 4, 5 and 7.

Application (Carrier MF)	Data Element Identifier 50	Leg
Chapters 4,5	50/DC 810	BBB/CCC

Application (Carrier DC)	Data Element Identifier 50	Leg
Chapters 4,5	10/MF 2810	BBB/CCC
Chapter 7	MFØ 2810	BBB/CCC

→ *For further advice on this use of Data Element Identifiers 10 and 50, refer to Appendix H: Duplicate Flight Legs, Example 2.*

Example 2:

Carrier DC operates a flight DC 810 over itinerary AAA-BBB-CCC.

Carrier MF operates a flight MF 2810 over itinerary EEE-BBB-CCC where leg BBB-CCC is not physically operated by MF, being a leg on which it may sell seats on carrier DC flight DC 810.

The Operating Airline Disclosure—Code Share for the leg BBB-CCC and the application of Data Element Identifiers 10 and 50.

However, recipients of data from carrier MF relating to Flight Number MF 2810 must additionally take notice that segment EEE-CCC includes a leg (BBB-CCC) where the carrier has been allowed to sell seats by carrier DC and is thus non-operational by carrier MF.

Example 3:

Carrier BN Corporate Express Airways operates a service AAA-BBB on behalf of carrier DC under the terms of an Operational Airline Disclosure—Shared Airline or Wet Lease Designation agreement using Flight Designator DC 810.

Furthermore, carrier DC allows a number of seats on service AAA-BBB to be sold by carrier MF that sells these seats under Flight Designator MF 2810.

Carrier DC controls the sale of the remaining seats under Flight Designator DC 810.

Carrier DC should use data element Operating Airline Disclosure—Shared Airline or Wet Lease Designation to specify the carrier actually providing the service—Corporate Express Airways—in data sent to interested parties relating to their flight DC 810.

Application (Carrier DC)	Example	Aircraft Owner	Leg
Chapters 4,5	9/BN	3/BN	AAA/BBB
Chapter 7	S	BNØ	AAA/BBB

If Corporate Airways Express does not have an IATA assigned Airline Designator, then Data Element Identifier 127 must be used to identify the operator in Chapters 4, 5 and 7.

Application (Carrier DC)	Example	Data Element Identifier 127	Leg
Chapters 4,5	9/X	127//CORPORATE EXPRESS AIRWAYS	AAA/BBB
Chapter 7	X	127AAABBB/CORPORATE EXPRESS AIRWAYS	AAA/BBB

Furthermore, Carrier MF should use data element Operating Airline Disclosure—Code Share for the leg AAA-BBB to show BN Corporate Airways Express as the operating carrier in data sent to interested parties relating to their flight MF 2810.

Application (Carrier MF)	Example	Aircraft Owner	Leg
Chapters 4,5	2/BN	3/BN	AAA/BBB
Chapter 7	L	BNØ	AAA/BBB

If Corporate Express Airways does not have an IATA assigned Airline Designator, then Data Element Identifier 127 must be used to identify the operator in Chapters 4, 5 and 7.

Application (Carrier MF)	Example	Data Element Identifier 127	Leg
Chapters 4,5	2/X	127//CORPORATE EXPRESS AIRWAYS	AAA/BBB
Chapter 7	Z	127AAABBB/CORPORATE EXPRESS AIRWAYS	AAA/BBB

DC as the Administrating Carrier, must also specify Data Element Identifier 10 for leg AAA-BBB in Chapters 4, 5 and 7.

Application (Carrier DC)	Data Element Identifier 10	Leg
Chapters 4,5	10/MF 2810	AAA/BBB
Chapter 7	MFØ 2810	AAA/BBB

MF must specify Data Element Identifier 50 for leg AAA-BBB.

Application (Carrier MF)	Data Element Identifier 50	Leg
Chapters 4,5	50/DC 810	AAA/BBB
Chapter 7	DCØ 810	AAA/BBB

Example 4:

Carrier DC fly High Airways operates a flight DC 810 over itinerary AAA-BBB-CCC.

Carrier DC allows a number of seats on leg BBB-CCC to be sold by carrier MF who sells these seats under Flight Designator MF 2810.

Carrier DC controls the sale of the remaining seats under Flight Designator DC 810.

Under a separate agreement, carrier MF allows a number of seats allocated to Flight Designator MF 2810 to be sold by carrier BN under Flight Designator BN 3810.

The Operating Airline Disclosure—Code Share for leg BBB-CCC will show DC as the operating carrier in data sent to interested parties by MF and BN (both non-operating carriers) relating to their flights MF 2810 and BN 3810 respectively.

Application (Carrier MF/BN)	Example when operating carrier code is used	Aircraft Owner	Leg
Chapters 4,5	2/DC	3/DC	BBB/CCC
Chapter 7	L	DCØ	BBB/CCC

DC as the Administrating Carrier must also specify Data Element Identifier 10 and both MF and BN must specify Data Element Identifier 50 for leg BBB-CCC in Chapters 4, 5 and 7.

Application (Carrier MF/BN)	Data Element Identifier 50	Leg
Chapters 4,5	50/DC 810	BBB/CCC
Chapter 7	DCØ 810	BBB/CCC

Application (Carrier DC)	Data Element Identifier 10	Leg
Chapters 4,5	10/MF 2810/BN 3810	BBB/CCC
Chapter 7	MFØ 2810/BNØ 3810	BBB/CCC

Code Sharing—Multiple Names

Multiple Names may be required when using Data Element Identifier 127 in Chapters 4, 5 and 7.

When there is a requirement to disclose an Airline name **and** a corporate (or network) name, it is recommended that the form **"AIRLINE X DBA ABC EXPRESS"** be used where **'DBA'** means 'doing business as'.

This may occur in commuter or express style operations.

When Code Share and Wet Lease conditions exist on the same flight, and there is a requirement to disclose both Airlines, it is recommended that the form **"AIRLINE ABC FOR AIRLINE XYZ"** be used.

AIRLINE ABC is the Airline providing the aircraft and crew and is actually operating the flight (the Wet Lease Carrier) **AIRLINE XYZ** is the Airline which is the operating carrier (code share partner) in an Operating Airline Disclosure—Shared Airline or Wet Lease Designation agreement.

For example, if flight **OS 123** is actually operated by airline **DB** aircraft and cockpit crew on behalf of airline **VO** that has an Operating Airline Disclosure—Shared Airline or Wet Lease Designation agreement with **OS**. Then airline **OS** would, when distributing the schedule for flight **OS 123**, use the disclosure format **BRIT AIR FOR TYROLEAN AIRLINES**.

In this example, Brit Air is the full name for **DB**, and Tyrolean Airways is the full name for **VO**.

The same principle would apply if the Code Share arrangement was an Operating Airline Disclosure—Code Share rather than an Operating Airline Disclosure—Shared Airline or Wet Lease Designation.

When Operating Airline Disclosure—Shared Airline or Wet Lease Designation and Operating Airline Disclosure—Code Share conditions exist on the same flight, and there is a requirement to disclose both Airlines, it is recommended that the form **"AIRLINE ABC FOR AIRLINE XYZ"** be used.

AIRLINE ABC is the Airline providing the aircraft and crew and is actually operating the flight (the Operating Airline Disclosure—Shared Airline or Wet Lease Designation Carrier) **AIRLINE XYZ** is the Airline that is the operating carrier in an Operating Airline Disclosure—Code Share.

For example, if flight **OS 123** is actually operated by airline **DB** under an Operating Airline Disclosure—Shared Airline or Wet Lease Designation between airlines **OS** and **DB** and airline **VO** also markets the flight under their own Flight Designator as **VO 789**, then airline **VO** would, when distributing the schedule for flight **VO 789** use the disclosure format 'BRIT AIR FOR AUSTRIAN AIRLINES'.

In this example, BRIT AIR is the full name for **DB**, and AUSTRIAN AIRLINES is the full name for **OS**.

When using a full company name, or multiple names, be aware that some computer systems have limitations on the number of characters they can store/display.

As such, specifications of more than 35 characters may be truncated.

Code Sharing—Code Sharing and Wet Lease Handling in Chapters 4, 5 and 7

The following section summarises the procedures to handle Code Sharing and Wet Lease operations in Chapters 4, 5 and 7.

When there is a legal requirement to disclose the Actual Operator of the flight, and the Actual Operator is different from the Administrating Carrier and the Aircraft Owner, use of one of the following procedures becomes mandatory.

Chapters 4 and 5 Applications

For disclosure of the following situations;

1. Operating Airline Disclosure—Code Share

   use Data Element Identifier 2 for the Airline Designator of the Operating Carrier;

   if a full name is required, specify **"X"** in Data Element Identifier 2 and use Data Element Identifier 127 to provide a free text statement of the disclosure required.

2. Operating Airline Disclosure—Shared Airline or Wet Lease

   use Data Element Identifier 9 for the Airline Designator of the Operating Carrier;

   if a full name is required, specify **"X"** in Data Element Identifier 9 and use Data Element Identifier 127 to provide a free text statement of the disclosure required.

3. Operating Airline Disclosure—Code Share **AND** Wet Lease

   specify **"X"** in Data Element Identifier 2, and use Data Element Identifier 127 to provide a free text statement of the disclosure required.

4. Operating Airline Disclosure—Shared Airline **AND** Wet Lease

   specify **"X"** in Data Element Identifier 9 and use Data Element Identifier 127 to provide a free text statement of the disclosure required.

5. Operating Airline Disclosure—Shared Airline Designation **AND** Operating Airline Disclosure—Code Share

   specify **"X"** in Data Element Identifier **2** and use Data Element Identifier **127** to provide a free text statement of the disclosure required.

Chapter 7 Application

1. Operating Airline Disclosure—Code Share

   specify **"L"** in byte 149 in record type 3 to point to Aircraft Owner in bytes 129–131 for the Airline Designator of the Operating Carrier;

   or

   specify **"Z"** in byte 149 to point to a following record type 4 with a Data Element Identifier 127 to provide a free text statement of the disclosure required.

2. Operating Airline Disclosure—Shared Airline or Wet Lease Designation

   specify **"S"** in byte 149 in record type 3 to point to Aircraft Owner in bytes 129–131 for the Airline Designator of the Operating Carrier;

   or

   specify **"X"** in byte 149 to point to a following record type 4 with a Data Element Identifier 127 to provide a free text statement of the disclosure required.

3. Operating Airline Disclosure—Code Share **AND** Wet Lease Designation

   specify **"Z"** in byte 149 in record type 3 to point to a following record type 4 with a Data Element Identifier **127** to provide a free text statement of the disclosure required.

4. Operating Airline Disclosure—Shared Airline **AND** Wet Lease

   specify **"X"** in byte 149 in record type 3 to point to a following record type 4 with a Data Element Identifier 127 to provide a free text statement of the disclosure required.

5. Operating Airline Disclosure—Shared Airline designation **AND** Operating Airline Disclosure—Code Share

   specify **"Z"** in byte 149 in record type 3 to point to a following record type 4 with a Data Element Identifier **127** to provide a free text statement of the disclosure required.

Daylight Saving Time

Chapters 4 and 5 format

All date and leg schedule information is expressed in **either UTC or Local Time** depending on the Time Mode provided in the Message Heading.

When receiving schedule data through SSM/ASM messages, the recipient may have to assume his own system's UTC/Local Time Variation tables in order to establish the applicable reciprocal times and dates.

Chapter 4 only

If the schedule data provided extends across DST or LT, changes may become ambiguous to the receiver what conversion will be required, especially in the case of open-ended schedules. It is therefore recommended to use a definite end period to avoid any miscalculations or interpretations.

Chapter 7 format

The Leg Departure Data and Leg Arrival Data **includes the UTC/Local Time Variation** for the stations involved. This provision enables the recipient of the data set to process the data using either UTC or Local Time as the basis for updating his own systems irrespective of the Time Mode provided in Record Type 2, byte 2.

General Information

When a data set is produced, it is particularly important to ensure that any changes to the UTC/Local Time Variations are accurately reflected to avoid any miscalculation of local timings being made by the recipient of the data.

Such changes may be a result of the start and/or end of Daylight Saving Time, or a planned change of Standard Local Time, occurring during the validity of the data set as specified in the Period of Schedule Validity in Record Type 2.

For each Flight Itinerary, this is achieved by creating as many Itinerary Variations as necessary, with appropriate Period of Operation start and end dates for each change to the UTC/Local Time Variation occurring within the flight's overall Period of Operation.

When the data set is valid indefinitely (end date of Period of Schedule Validity is “00XXX00”), it is recommended that any Flight with indefinite validity, has sufficient Itinerary Variation created with a definite end date in the Period of Operation. This will then reflect accurate UTC/Local Time Variations, and avoid any miscalculations or interpretations.

These Itinerary Variations would be established for a minimum of one year and a maximum of three years from the start date specified in the Period of Schedule Validity.

Example 1:

Daylight Saving Time applies for JFK, LAX, SFO until 01Nov09, and again from 14MAR10.

Record Type 2:

Period of Schedule Validity: 01JUN09 **00XXX00** Time Mode: U

Record Type 3:

```
IV01    01JUN0901NOV09    JFK    1300    -0400    LAX    1835    -0700
        01JUN0901NOV09    LAX    2000    -0700    SFO    2100    -0700
IV02    02NOV0913MAR10    JFK    1400    -0500    LAX    1935    -0800
        02NOV0913MAR10    LAX    2100    -0800    SFO    2200    -0800
IV03    14MAR1000XXX00    JFK    1300    -0400    LAX    1835    -0700
        14MAR1000XXX00    LAX    2000    -0700    SFO    2100    -0700
```

Example 2:

Daylight Saving Time applies for JFK, LAX, SFO until 01Nov09, and again from 14MAR10

Record Type 2:

Period of Schedule Validity: 01JUN09 **00XXX00** Time Mode: L

Record Type 3:

```
IV01    01JUN0901NOV09    JFK    0900    -0400    LAX    1135    -0700
        01JUN0901NOV09    LAX    1300    -0700    SFO    1400    -0700
IV02    02NOV0913MAR10    JFK    0900    -0500    LAX    1135    -0800
        02NOV0913MAR10    LAX    1300    -0800    SFO    1400    -0800
IV03    14MAR1000XXX00    JFK    0900    -0400    LAX    1135    -0700
        14MAR1000XXX00    LAX    1300    -0700    SFO    1400    -0700
```

Default

There are two methods of establishing defaults within SSIM.

The first is by the rules defined in each Data Element entry in Chapter 2.

The second is by using separate Data Elements to allow the default to be specified.

The nature of the Data Element is likely to dictate which default method is used.

It could also be argued that all Conditional Data Elements have a default mechanism since they are not required (default) unless the specified conditions exist.

The following data elements have a default mechanism:

Data Element	Default
Aircraft Owner	Airline designator of the applicable record/flight designator
Cabin Crew Employer	Aircraft Owner
Cockpit Crew Employer	Aircraft Owner
Electronic Ticketing Information	EN, but, in Chapter 7 a Data Element can be used to specify a default
Frequency Rate	Weekly
In-Flight Service Information	Code 9 (Non-smoking)
Minimum Connecting Time International/Domestic Status	Where the countries of origin and destination of the leg are the same, the status is domestic.
	Where the countries of origin and destination of the leg are different, the status is international.
Passenger STA	The same as the Scheduled Time of Aircraft Arrival (Aircraft STA)
Passenger STD	The same as the Scheduled Time of Aircraft Departure (Aircraft STD)
Traffic Restriction Code	Applies to all Traffic types and at Board and/or Off Point unless qualified
Traffic Restriction Note	Applies to all Traffic types and at Board and/or Off Point unless qualified

→ *Refer also to Appendix H: Legs/Segments—Segment Default Assumptions*.

Duplicate Flight Legs

For commercial/technical reasons, it is sometimes necessary for the itinerary of two or more Flight Designators (not necessarily within the same carrier) to include one or more common legs operated by one aircraft.

It is necessary for the recipient of data to be able to distinguish the operational Flight Designator from the duplicate Flight Designator(s).

The distinction of **operational** versus **duplicate** Flight Designator is represented by the use of Data Element Identifier 10 (Duplicate Leg Cross Reference—Duplicate Leg Identification) and/or Data Element Identifier 50 (Duplicate Leg Cross Reference—Operational Leg Identification).

Unless the common (duplicated) leg(s) are saleable under each of the Flight Designators where they are shown, the appropriate Traffic Restriction Code applies to the leg(s) (and any segment(s)) of those Flight Designator(s) where the carriage of traffic is restricted.

The existence of Traffic Restriction Codes alone will not convey the operational versus duplicate Flight Designator relationship.

Example 1:

Assume the physical operation of an aircraft routing DFW-BHM-HSV-DFW.

Flight Designator AAA306 is scheduled DFW-BHM-HSV and Flight Designator AAA305 is scheduled BHMHSV-DFW.

The operational Flight Designator for the leg BHM-HSV is AAA306.

Solid lines indicate aircraft movement.

Dashed lines indicate the flight schedule.

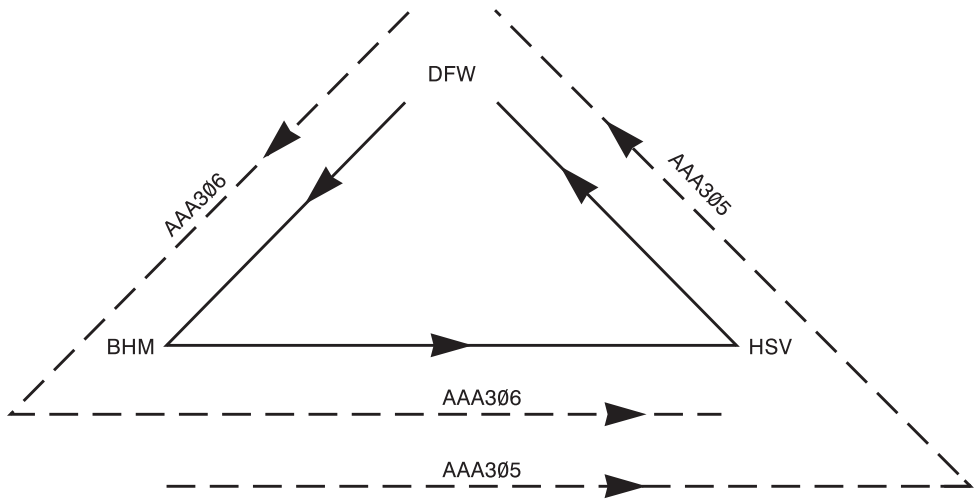

The Flight Designator **AAA305** BHM-HSV must have Data Element Identifier 50 stating that Flight Designator AAA306 is the Operational Leg.

The Flight Designator **AAA306** BHM-HSV shall have a Data Element Identifier 10 stating that Flight Designator AAA305 is a duplicate.

Example 2:

Assume the physical operation of an aircraft owned by airline ABC operating as Flight Designator ABC123 VIE-FRA and the physical operation of an aircraft owned by airline DEF operating as Flight Designator DEF456 FRA-JFK.

It is desired to show Flight Designator DEF456 VIE-FRA-JFK (where airline DEF has leased space from airline ABC on the VIE-FRA leg).

ABC has traffic rights VIE-FRA.

DEF has full traffic rights VIE-JFK and FRA-JFK and online stopover traffic rights VIE-FRA.

The operational Flight Designator for VIE-FRA is ABC123.

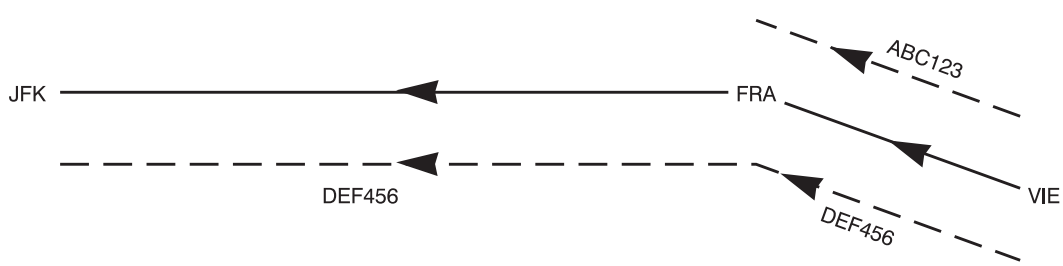

The Flight Designator DEF456 VIE-FRA must have a Data Element Identifier 50 stating that Flight Designator ABC123 is the operational leg.

Traffic Restriction Code **'T'** applies to VIE-FRA.

Additionally, DEF456 must, by the use of Data Element Identifier 2 (Operating Airline Disclosure—Code Share), specify that the operating carrier for the VIE-FRA leg is airline ABC.

The Flight Designator ABC123 VIE-FRA shall have a Data Element Identifier 10 stating that Flight Designator DEF456 is a duplicate.

→ *Refer also to Appendix H: Commercial Agreements between two or more Airlines—Operating Airline Disclosure—Code Share*.

Example 3:

Composite Flight *(see Chapter 1—Definitions)*

Assume that the physical operation of two separate flights operated by airline ABC route SLC-ATL using Flight Designator ABC454, and ATL-LGW using Flight Designator ABC12.

It is desired to show a through flight SLC-LGW using a Flight Designator that is different from both the Flight Designators used on the constituent legs which make up the through flight—for example, ABC6062.

Flight ABC6062 is known as a Composite Flights.

```
                    ABC6062
SLC ............................ ➧ ............................ LGW        (Composite Flight)

          ABC454                    ABC12
SLC ---------- ➧ ---------- ATL ---------- ➧ ---------- LGW        (Operational Flights)
```

When information for Flight Designator ABC6062 is being transmitted, it must show both physical legs under Flight Designator ABC6062.

Each leg shall have a Data Element Identifier 50 stating the Flight Designator of the operational flight for that leg—ABC454 for the leg SLC-ATL, and ABC12 for the leg ATL-LGW.

Traffic Restrictions shall be applied to the individual legs/segments under Flight Designator ABC6062 to ensure that they are not displayable under more than one Flight Designator.

Flight Designators ABC454 and ABC12 shall have a Data Element Identifier 10, stating that Flight Designator ABC6062 is a duplicate.

The result of this should be that the following Flight Designators are displayed:

SLC-ATL	ABC454 (ABC6062 for this leg is suppressed/non-operational)
SLC-LGW	ABC6062
ATL-LGW	ABC12 (ABC6062 for this leg is suppressed/non-operational)

Note that the operational flights need not have the same Airline Designator as the Composite Flight.

Example 4:

Funnel Flight *(see Chapter 1—Definitions)*

Assume that the physical operation of four separate flights is as follows:

ABC39	AMS-ATL
ABC109	MAD-ATL
ABC19	LGW-ATL
ABC451	ATL-SLC

It is desired to show through flights from AMS, MAD and LGW to SLC using Flight Designators ABC39, ABC109 and ABC19 respectively.

In doing this, the legs AMS-ATL, MAD-ATL and LGW-ATL will become constituent parts of Funnel Flights AMS-ATL-SLC (ABC39), MAD-ATL-SLC (ABC109) and LGW-ATL-SLC (ABC19).

```
                    ABC39                    ABC39
AMS ----------------➧---------------- ATL _ _ _ _➧_ _ _ _

                    ABC109                   ABC109
MAD ----------------➧---------------- ATL _ _ _ _➧_ _ _ _

                    ABC19                    ABC19
LGW ----------------➧---------------- ATL _ _ _ _➧_ _ _ _

                                ABC451
                        ATL ----------➧---------- SLC
```

When information for the leg ATL-SLC is being transmitted using Flight Designators ABC39, ABC109 and ABC19.

Data Element Identifier 50 shall be used to state that the Flight Designator of the operational flight for the leg ATL-SLC is ABC451. A Traffic Restriction shall be applied to the ATL-SLC leg to ensure that it is not displayed under more than one Flight Designator.

Flight Designators ABC451 for the ATL-SLC leg shall have a Data Element Identifier 10 to state that Flight Designators ABC39, ABC109 and ABC19 are duplicates.

The result of this should be that the following Flight Designators are displayed:

AMS-ATL	ABC39
AMS-SLC	ABC39
MAD-ATL	ABC109
MAD-SLC	ABC109
LGW-ATL	ABC19
LGW-SLC	ABC19
ATL-SLC	ABC451 (ABC39, ABC109 and ABC19 for this leg are suppressed/non-operational)

Note that a Funnel Flight may be built in either direction, from many legs into one segment (as in the example above), or from one leg into many segments.

Example 5:

Change of Equipment en Route *(see Chapter 1—Definitions)*

On a multi-leg flight, a Flight Designator need not relate to the operation of one single aircraft.

Normally, a change of equipment en route is evident from the Aircraft Types used on each leg of the flight.

If, however, there is a change from one aircraft to another **of the same type**, the Data Element *'Plane Change without Aircraft Type Change'* (Data Element Identifier 210) shall be used.

Referring to Example 3 above relating to a Composite Flight, assume that flight ABC6062 SLC-ATL-LGW uses Aircraft Type L10 on the SLC-ATL leg, and M11 on the ATL-LGW leg.

There is a change of equipment at ATL from L10 to M11.

Although passengers must physically change aircraft, their Flight Designator remains the same throughout the journey—ABC6062.

```
                          ABC6062
SLC ..................... ➧ .....................LGW   (Flight Designator)

                L10                    M11
SLC------------ ➧ ------------ATL------------ ➧ ------------LGW   (Equipment)
```

If, however, the Aircraft Type were M11 for both legs of the flight—SLC-ATL and ATL-LGW—but passengers must still physically change aircraft at ATL, it would be necessary to use Data Element Identifier 210 as follows:

```
ATLLGW 210
```

```
                          ABC6062
SLC..................... ➧ .....................LGW   (Flight Designator)

                M11                    M11
SLC ------------ ➧ ------------ATL ------------ ➧ ------------LGW   (Equipment)
```

Note that the data element is used on the leg where the Board Point has the Plane Change, i.e. in this case ATL:

Also, stating the Data Element Identifier 210 is all that is required as this implies the condition that passengers have to change planes at ATL.

Electronic Ticketing Information

The concept of Electronic Ticketing, or ‘Ticketless Travel’, promises faster and simpler reservations and Airport Handling for air travel, as well as a reduction in distribution costs.

In order to facilitate this, and to make it available on an Interline basis, it is necessary to provide Industry standards for transmitting information:

- whether a flight leg is, or is not, a candidate for Electronic Ticketing—i.e. whether reservations can be accepted without a paper ticket being issued; and,
- whether both the origin and destination airports of the leg can handle customers who do not have paper tickets.

It is essential that Airlines, CRSs and Agents have this information available when a booking is made to be able to offer an Electronic Ticketing service to the customer, or be advised of the Carrier's ticketing acceptance of only Electronic Tickets.

The codes used in SSIM to specify this information are:

EN …… Not Electronic Ticketing Candidate

ET …… Electronic Ticketing Candidate

In Chapters 4, 5 and 7, these codes are used in conjunction with Data Element Identifier 505.

Carrier Defaults

To save the Carrier having to specify for every leg whether it is, or is not, a candidate for Electronic Ticketing, a means of allowing a Carrier to specify their default position is required.

This can be achieved in SSIM in three ways:

(i) For Chapter 7, by specifying **"ET"** or **"EN"** in bytes 189 and 190 of Record Type 2.

(ii) By bilateral agreement between the parties concerned.

It is not possible to specify a default for a Carrier using Chapters 4 or 5, because the SSM and ASM messages may not be a complete transmission of a Carrier's schedules, and there is no Carrier specific header to use.

It is therefore assumed that the Carrier will already have transmitted this information using Chapter 7 or that they have reached a bilateral agreement with the recipient as to their default.

Chapters 4 and 5 can be used to transmit specific Electronic Ticketing Information for the legs and/or segments specified using Data Element Identifier 505. (See Appendix H, 'Electronic Ticketing Information' and 'Legs/Segments'.)

In the absence of any default information for a Carrier, the default assumed will be that that Carrier's flight legs are **not** eligible for Electronic Ticketing.

Electronic Ticketing for Segments

The Electronic Ticketing Information data element is specifically a LEG BASED data element.

The determination that a segment of a passenger's journey is a candidate for Electronic Ticketing has to be deduced from the sum of the information provided for all the legs contained within the journey.

For a flight travelling on an itinerary AAA-BBB-CCC, segment AAA-CCC can be an Electronic Ticketing Candidate only when both legs AAA-BBB and BBB-CCC are designated as Electronic Ticketing Candidates.

Examples:

(i) Carrier's **default** is that its legs are Not Electronic Ticketing Candidates **(EN)**. Itinerary is AAA-BBB-CCC, with **all legs eligible** for Electronic Ticketing. Carrier sends code ET for both legs AAA-BBB and BBB-CCC. AAA-BBB, BBB-CCC, AAA-CCC are all eligible for Electronic Ticketing.

(ii) Carrier's **default** is that its legs are Not Electronic Ticketing Candidates **(EN)**. Itinerary is DDD-EEE-FFF, with **only leg DDD-EEE eligible** for Electronic Ticketing. Carrier sends code ET for leg DDD-EEE. DDD-EEE is eligible for Electronic Ticketing. DDD-FFF and EEE-FFF are not eligible for Electronic Ticketing.

(iii) Carrier's **default** is that its legs are Electronic Ticketing Candidates **(ET)**. Itinerary is AAA-BBB-CCC, with **all legs eligible** for Electronic Ticketing. Carrier does not need to send any further Electronic Ticketing Information. AAA-BBB, BBB-CCC, AAA-CCC are all eligible for Electronic Ticketing.

(iv) Carrier's **default** is that its legs are Electronic Ticketing Candidates **(ET)**. Itinerary is DDD-EEE-FFF, with **only leg DDD-EEE eligible** for Electronic Ticketing. Carrier sends code EN for leg EEE-FFF. DDD-EEE is eligible for Electronic Ticketing. DDD-FFF and EEE-FFF are not eligible for Electronic Ticketing.

Fictitious Points

The definition of Flight Number states that a flight cannot originate more than once on the same day (see Chapter 2—Flight Number).

This rule presents a problem when one flight itinerary encounters a date change and the adjacent day's flight itinerary does not have the same date change characteristics.

When this problem occurs, a non-operational leg must be used to prevent the problem of originating more than once on the same day.

It is therefore recommended that fictitious Stations be used to create the non-operational leg.

It is necessary to define this leg as **non-operational** by use of a fictitious point. When such a fictitious point (see SSIM Chapter 2—Station) is used at the beginning or the end of a routing, the leg(s) containing such a point is deemed as non-operational.

It should be noted that segments with fictitious Stations are deemed never saleable.

If another Station isused for creation of a non-operational leg, Traffic Restriction Code **"A"** must be specified for all segments using this Station as Board/Off Point.

The following examples deal with problems in **local time** mode.

It is possible for the problem not to exist in **local time mode** but still exist in **UTC time mode**.

→ *Refer to **Appendix H: Time Mode** for the use of Operational Suffix **"Z"** to correct the problem*.

However, carriers not wishing to use the Operational Suffix **"Z"** may use the non-operational leg principle to overcome problems also in UTC time mode.

Example 1:

Both itineraries operate over a common leg but one itinerary originates one Station upline of the other.

		Problem		Solution	
		XYZ123	XYZ123	XYZ123	XYZ123
		123**7**	56**7**	1237	456
ZRH	D	2350		2350	
QPX	D				2350
		1234		1234	567
LHR	A	0015		0015	0015
LHR	D	0100	0100	0100	0100
JFK	A	0350	0350	0350	0350

A problem occurs in this schedule because a day change occurs between ZRH and LHR and therefore two flights originate on the same day of the week (day 7).

This problem can be overcome by adding a fictitious point as Station of origin (QPX) with a UTC variation compatible to the point of origin of the other itinerary (ZRH).

Example 2:

A problem may occur in some computer systems that index flights on points other than the Station of origin (i.e. last departure Station in an itinerary).

This problem can be overcome by adding a fictitious point as final destination.

		Problem		Solution	
		XYZ123	XYZ123	XYZ123	XYZ123
		1237	**4**56	1237	456
JFK	D	2145	**2145**	2145	2145
		1234	567	1234	567
LHR	A	1010	1010	1010	1010
LHR	D	1100		1100	1100
ZRH	A	1315		1315	
QPX	A				1315

The UTC variation of a fictitious point has to be compatible with the final destination of the other itinerary to obtain the same day variation characteristics.

Legs/Segments

In the examples used below, a flight routing AAA-BBB-CCC is used.

AAA-BBB and BBB-CCC are the legs that make up the multi-leg segment AAA-CCC.

As many data elements are specifically LEG BASED, it is necessary to clarify the data that can be assumed for a multi-leg segment.

In general, no assumptions can be made.

The underlying concept for leg based data elements is that the data being provided for a leg is only valid for that specific leg.

For example:

The aircraft travels physically by leg such that the Aircraft Configuration/Version (ACV) may differ by leg, or be the same for both legs (AAA-BBB and BBB-CCC).

There is no ACV for the segment AAA-CCC as such and if the ACV differed by leg, it would be meaningless.

The passenger however, travels by segments where there may be a Selling Class applicable to the segment AAA-CCC. The Selling Class may not be applicable to any or both of the legs that comprise the segment.

A multi-leg segment must normally be seen as the data being provided separately for each leg.

A further example of this might be In-Flight Service Information, where leg AAA-BBB is shown as code **“9”** (Non smoking) and leg BBB-CCC as code **“8”** (Smoking).

The passenger travelling AAA-CCC should expect the first leg of the flight to be ‘Non smoking’ and the second leg to be ‘Smoking’.

If no In-Flight Service Information was provided for the leg BBB-CCC, no assumption can be made as to whether it is ‘Smoking’ or ‘Non smoking’.

In both cases, the multi-leg segment data is simply the sum of the data for the two legs—AAA-BBB ‘Non smoking', BBB-CCC ‘Smoking’ or no information.

Segment Override Data Elements

Some leg based data elements have complementary segment override data elements.

For example, a flight might have Meal Service Note code **"S"** for all classes on each leg (AAA-BBB and BBB-CCC).

The assumption here is that a passenger travelling AAA-CCC will get a Snack on each leg of the flight, i.e. two Snacks in total.

However, a Meal Service Segment Override data element might be used to state code **"M"** for the segment AAA-CCC.

In this case, the passenger travelling AAA-CCC will get one Meal instead of the two Snacks.

This principle applies whether the data is the same for each constituent leg, or whether it differs by leg.

The following leg based data elements have complementary segment override data elements:

Data Element (leg based)	Data Element (segment override)
Joint Operation Airline Designators	Joint Operation Airline Designators Segment Override
Meal Service Note	Meal Service Segment Override
Minimum Connecting Time International/ Domestic Status	Minimum Connecting Time International/Domestic Status Override
Passenger Reservations Booking Designator	Passenger Reservations Booking Designator Segment Override
Passenger Reservations Booking Modifier	Passenger Reservations Booking Modifier Segment Override
Passenger Terminal Identifier—Arrival	Passenger Terminal Identifier Segment Override—Arrival
Passenger Terminal Identifier—Departure	Passenger Terminal Identifier Segment Override—Departure

Segment Default Assumptions

The following data elements are leg based, but also have rules about assumptions that can be made about information for related multi-leg segments:

Electronic Ticketing Information

A multi-leg segment can be an Electronic Ticketing candidate only if all of its legs are set as Electronic Ticketing Candidates.

→ *For further information, refer to Appendix H: 'Electronic Ticketing Information' and 'Legs/Segments'*.

Passenger Reservations Booking Designator

A default assumption can be made when the PRBD Segment Override data element has not been used.

For example, a flight having a PRBD of CDSBM on leg AAA-BBB, and SBM on leg BBB-CCC, may have no PRBD Segment Override data element stated for AAA-CCC.

In this case, it should be assumed that the PRBD stated for the leg which has the same Board Point as the multi-leg segment (in this case AAA-BBB) is used—CDSBM in this example.

It is strongly recommended, however, that the PRBD Segment Override be used in such cases, in order to ensure data is complete and unambiguous.

→ *For further information, refer to Chapter 2, Passenger Reservations Booking Designator*.

In all cases, it is the responsibility of the sender to ensure that information being transmitted is complete and unambiguous.

Minimum Connecting Time

Minimum Connecting Time are governed by the Passenger Services Conference (PSC) **RESOLUTION 765: CONNECTING TIME INTERVALS—PASSENGER AND CHECKED BAGGAGE**

Definition

For the purpose of Resolution 765, In a *passenger* context, Minimum Connecting Time (MCT) interval is defined as the shortest time interval required in order to transfer a passenger and his luggage from one flight to a connecting flight, in a specific location or metropolitan area.

In a *cargo* context, the Minimum Connecting time (MCT) can be defined as the shortest time interval required in order to transfer cargo shipment from one flight to a connecting flight. Minimum Connecting Time (MCT) intervals are also referred to as 'official' or 'standard' MCTs.

Bilateral MCT agreements are known as 'MCT exceptions'.

Online connecting time intervals established by a carrier that differ from the industry MCTs are also known as MCT exceptions.

The administration of MCTs is governed by IATA PSC Resolution 765 which is as follows:

RESOLUTION 765
CONNECTING TIME INTERVALS—PASSENGER AND CHECKED BAGGAGE

RESOLVED that:

1. Members serving the airport(s) of each city shall establish a Local Minimum Connecting Time Group (LMCTG) for purposes of recommending new or changes to minimum intermodal connecting time intervals at such airport(s). The group shall consist of all scheduled airlines and railways serving the airport. The basic objective of agreed connecting time intervals is to protect both the delivering and receiving Member's interests and ensure that the passenger and his baggage can rely on making connections between airlines and railways serving the airport.

For the purposes of this Resolution,

MINIMUM CONNECTING TIME (MCT) INTERVAL means the shortest time interval required in order to transfer a passenger and his luggage from one flight to a connecting flight, in a specific location or metropolitan area.

Intermodal connections involving a railway service shall be only considered if such railway service has been assigned an airline flight number.

2. At cities served by IATA Members and by Members of the Airlines for America (A4A) who are not IATA Members, such A4A Members shall be invited to participate as voting Members of the LMCTG.

At cities served by railways and airlines, where passengers transfer between each mode of transport, and where intermodal agreements exist between railways and airlines, such railway operators shall be invited to participate as voting Members of the LMCTG. The voting rights of railways shall relate only to action concerning connections between airlines and railways serving the airport or providing connections between the airport and the city location (train station).

3. At cities where an Airport Operators Committee (AOC) [IATA Airport Handling Manual Resolution 020] exists and where no LMCTG exists, such AOC can take on the duties assigned to the LMCTG in this resolution, provided the different stakeholders are duly represented at the AOC as they would in the LMCTG.

While occasionally Airport Authorities can act as facilitators in establishing local MCTs, the tasks described in this resolution are the unique responsibility of the LMCTG.

4. Each LMCTG shall be governed by the following rules:

4.1 the LMCTG shall elect a chairman;

4.2 in determining MCT intervals, the Group shall take into consideration the following factors, where applicable:

4.2.1 physical and operating characteristics of the particular airport, e.g. air traffic delays, ramp and baggage sorting area congestion, history of on-time performance, terminals, specific flight origin and/or destination region (such as Schengen countries), customs/immigration 'pre-clearance' situations, etc.;

4.2.2 time to unload baggage from delivering carrier's aircraft or designated railway service and transport to its sorting area;

4.2.3 time to sort and transport baggage to receiving carrier;

4.2.4 time for receiving carrier to assemble, sort, transport and load baggage on its aircraft or train;

4.2.5 time for all government/airline/railway imposed security measures (where applicable) to be completed as noted in Resolution 744, Attachment 'B';

4.2.6 time for passengers (and their baggage when such arrangements exist) to be processed by the receiving carrier;

4.2.7 the times established in 4.2.2, 4.2.3, 4.2.4 and 4.2.5 shall be published locally by the LMCTG so that carriers and railways are conscious of time constraints for each individual task, and are therefore aware of the time limits which they are expected to meet;

4.2.8 in establishing MCTs, members shall be guided by Resolution 744;

4.2.9 time for passenger and baggage to clear immigration and customs controls, etc.;

4.2.10 time for passenger to proceed to receiving carrier taking into consideration surface transportation time between terminals and/or airports when applicable;

4.2.11 minimum passenger check-in time for receiving carrier;

4.2.12 time for any other local factor(s).

4.3 after selecting the factors affecting the MCT, using the above as a guide, the Group will allocate a time to each factor and on this basis arrive at the MCT. As far as practicable, MCT intervals should be standardised for all categories of flights with the least possible number of exceptions. MCTs shall be established only in five minute increments, e.g. 30, 35, 40 minutes, etc.

4.4 action of the LMCTG (including election of a Chairman) shall be by simple majority vote of all Group members serving that airport (only one vote permitted per LMCTG member).

4.5 in case of disagreement within the group in respect of the MCTs between different terminals at the same airport, all of the receiving Members serving a particular terminal and present at the meeting, shall determine the required MCTs to their terminal.

5. Immediately after each LMCTG meeting at which new or changes to intermodal MCT intervals are recommended, the LMCTG members will communicate without any delays the revised MCT to their respective MCT coordinators (as listed in SSIM Attachment 3) Within ten (10) days the MCT Coordinators will advise their respective LMCTG member whether they agree or not to the recommended new or changes to the MCTs.

The LMCTG Chairman, once he as been informed that the new or changes to intermodal MCTs intervals have been accepted by the different MCT coordinators, will advise the IATA Management (Email: SSIM@iata.org).

6. Nothing in this Resolution shall preclude LMCTG Members from making bilateral agreements with other airlines or railways for shorter or longer intermodal MCT intervals in those cases where particular circumstances of their special arrangements/situations make this possible or necessary. Exceptional bilateral MCT exception filing practices are outlined in the IATA Standard Schedules Information Manual (SSIM). Each MCT coordinator is responsible for communicating and distributing those exceptional MCTs according to recognised industry practices. In case of disagreement between the two parties in respect of any such exceptional MCT values, the receiving Member's point of view shall govern, and be recognised by the industry as the exceptional MCT value.

7. All Members, railways and CRSs shall book and accept connecting reservations based on the established MCTs.

8. The MCTs for each airport shall be reviewed at least once a year by the LMCTG. If the revision leads to new/modified MCT intervals, procedure established in 5 shall be followed.

9. Upon receipt of the final report referred to in Paragraph 5, the IATA Schedules Service Department shall immediately notify, the CRSs, the data aggregators, and other industry stakeholders.

The effectiveness date of such changes as specified by the LMCTG concerned shall not be earlier than sixty (60) days after receipt by the IATA Schedules Service Department.

10. All communications concerning MCTs, between Members and IATA shall be made through the Member's designated MCT Coordinator in accordance with the IATA SSIM.

11. This Resolution shall not be applicable at cities served exclusively by A4A Members, even though some of the A4A Members may also be Members of IATA; provided that the necessary co-ordination shall be maintained between A4A and IATA for the publication of MCT intervals established by A4A Members.

General

As required by Resolution 765, MCTs must be observed by all ticketing and reservations outlets all over the world and also are used as input for automated reservations systems. It is therefore of the utmost importance to ensure that they are correctly established, updated and uniformly quoted at all times wherever they are published.

Designation of MCT Coordinator in Each Airline

In order to ensure proper coordination of MCTs, each airline is requested to designate a MCT coordinator. The coordinator's name, mailing address and teletype or cable address must be submitted to the IATA Coding Administrator, e-mail: airlinecoding@iata.org. Any change to this information should be sent to IATA promptly. The MCT Coordinator Contacts are listed under Attachment 3 of SSIM.

Changes to MCTs

Establishment of and changes to MCTs are governed by the provisions of IATA Resolution 765. For the purpose of applying Resolution 765, MCT Coordinators will be requested to advise their respective Local Minimum Connecting Time Group (LMTCG) member whether they agree or not to the recommended new or changed MCTs.

For the normal yearly review of MCTs and for any special review, Resolution 765 provides for notification to IATA Management (Email: SSIM@iata.org) not later than sixty (60) days prior to the intended effectiveness date of the agreed or established MCTs.

The Resolution requires that IATA communicates the new or amended MCTs and the effectiveness dates thereof. Such information will be sent to CRSs, data aggregators, and other industry stakeholders.

IATA does not publish MCTs, but acts only as a worldwide industry coordinator for all MCTs. MCTs are published by the data aggregators. The data aggregators and CRSs will not accept notification of new or revised MCTs directly from the airlines.

Bilateral MCT Agreements

Resolution 765 indicates that airlines are responsible for their own bilateral agreements with other airlines or railways for shorter or longer intermodal MCT intervals in those cases where particular circumstances of their special arrangements/situations make this possible or necessary.

The following additional rules have been established in order to ensure uniform administration of MCT exceptions.

MCT exceptions do not change any standard times set by the industry. A carrier must bring suggestions for changes to MCT standard times at an airport to the attention of the appropriate industry body.

Establishing MCT Exceptions

MCT exceptions can be lower or higher than the standard MCT at an airport.

An MCT exception can also ‘suppress’ (block) a connection from being made at the stated connect point for the specified status combination.

Examples of Current Rules that may be applied in an MCT exception database (and that are currently in place with the Data Aggregators):

Include airport code and relevant status:

(a) Airport code where potential connection will occur

Example: SYD

Connect point where carrier has an MCT exception

(b) Relevant status for the MCT exception

DD—Domestic to Domestic

DI—Domestic to International

ID—International to Domestic

II—International to International

Example: SYD ID

The ID status exception condition will apply to a flight that arrives SYD internationally (I) and connects to a flight leaving SYD domestically (D).

MCT exceptions can also be established according to factors such as inter-terminal, inter-airport, transborder, Schengen countries, specific flight number (ranges), aircraft types, etc.

MCT Involving Code Share Partners

Bilateral MCT exception applied to code share operations shall be established using the Marketing carrier designator.

There is no automated Industry Rule or agreement or automated mechanism in place to transfer an MCT exception made for an operating flight; onto any code share partner marketing the operating flight under their own designator.

One reason an automated process would not be used, is that there would be no guarantee that a change made to one carrier's flights will work on another.

Code share MCT exception cannot denounce Operating carrier exception. If a code share MCT exception undercuts the Operating carrier MCT exception, then the carrier filing the exception shall be recognised as the delivering carrier.

Note:

- Carriers need to decide ‘does my MCT exception affect my code share partner’
- Communicate to Code Share Partner
- Code Share Partner may need to submit the same exception

Current Practice for Submission of MCT's

The aim of an MCT exception database held by Data Aggregators is to hold Carrier Minimum Connecting Time (MCT) information that is different from the standard times set by industry bodies.

MCT exceptions agreed bilaterally between two airlines (and therefore not of a general nature, because they affect only the connections between those *two airlines*) should be notified directly by the airlines concerned to the data aggregators. However, the notification by one party requires the concurrence of the receiving carrier.

When the carrier sending in the proposed MCT exception is the receiving carrier*, the MCT exception can be added to the Data Aggregators database immediately.

When the carrier sending in the proposed MCT exception is not the receiving carrier*, the Data Aggregators must have approval from the receiving carrier before the MCT will be added.

MCT Hierarchy of Data Elements when submitting MCT exceptions

- Arrival Airport
- Status e.g. DD/DI/ID/II
- Departure Airport
- Departure Flight Number/Carrier designator must be present
- Departure Flight Number Range/Carrier designator must be present
- Departure Carrier
- Next Airport/City code is always shown as well
- Next State/Country code must be present
- Next Country
- Next Region (No other location code can be included when region is present)
- Departure Terminal
- Departure Aircraft Type or Equipment Type (W/N)
- Arrival Flight Number/Carrier designator must be present
- Arrival Flight Number Range/Carrier designator must be present
- Arrival Carrier
- Previous Airport/City code is always shown as well
- Previous State/Country code must be present
- Previous Country
- Previous Region (No other location code can be included when region is present)
- Arrival Terminal
- Arrival Aircraft Type or Equipment Type (W/N)
- Effective from date (DDMMMYY or blank)
- Effective until date (DDMMMYY or blank)

* *The receiving carrier, at the connect point, is the carrier whose flight the passenger is connecting to.*

Partial Cancellation of Flights

Chapter 5 allows the cancellation of single flight legs that are part of a multi leg flight by using ASM/CNL with a Flight Leg(s) Change Identifier.

As mentioned in Chapter 5, partial cancellations may lead to Flight Designator duplication problems.

Even the use of ASM/RPL cannot resolve such duplication problems completely as shown by the following example:

Example:

```
LH3444/14JUL
J 733.C123
HAM0645 FRA0750
FRA0830 MUC0925
MUC1010 BUD1125
QQQQQQ 503/9
```

Cancellation of the second leg FRA/MUC splits up the flight.

It leaves two flights with the same Flight Identifier Date remaining.

LH 3444/14JUL (part 1)

```
LH 3444/14JUL
J 733.C123 DABWH
HAM0645 FRA0750
HAMFRA 503/9
```

LH 3444/14JUL (part 2)

```
LH 3444/14JUL
J 319.C126
MUC1010 BUD1125
MUCBUD 503/9
```

or one flight without airport continuity:

```
LH 3444/14JUL
J 733.C123
HAM0645 FRA0750
(FRA0830 MUC0925 cancelled)
MUC1010 BUD1125
HAMFRA 503/9
MUCBUD 503/9
```

The problem of such duplications may also arise where the first leg is cancelled and the identifier date of the second leg does not equal the Flight Identifier Date from the original flight origin.

Such flights cannot be processed in accordance with ASM rules.

To enable automated data exchange during the operations control time frame, it would be helpful to transmit complete flight information with all associated legs by using ASM/RPL Messages and assigning cancel status **"XXXX"** to those legs concerned.

Such a method as described below here may only be used by bilateral agreement.

```
RPL
LH3444/14JUL
J 733.C123 DABWH
HAM0645 FRA0750
XXXX FRA0830 MUC0925
MUC1010 BUD1125
QQQQQQ 503/9
```

Processing flights in this way ensures that:

- Schedule information is complete with all associated data, e.g. references to marketing flights, traffic restrictions etc.,
- Complete set of segment information for the cancelled leg(s) can be accessed,
- Key information remains unchanged, automated processing is possible,
- Flight identifier duplications do not occur,
- Reinstatement of the entire flight is easily possible.

Partnership Specification

The following matrix is provided for guidance as to the application of Data Element Identifier 11 (Partnership Specification) in Computer Reservations Systems displays and publications.

Partnership Specification can be disclosed in a code bilaterally agreed between partnership carriers and distributing systems.

However, where space allows, it is preferred to disclose a partnership name for marketing recognition.

For screen display an indicator (for example ** as used in the table below) that multiple matches exist can be used to avoid displaying the same trip multiple times using each partnership match. This helps to avoid screen padding.

In the tables below, aaaa, bbbb and cccc are used to denote different airline partnerships, **"Y"** equates to 'Display' and "N" equates to 'Do Not Display'.

Direct Flights

DEI 11s	DEI 11 which is used for match	Neutral Availability– Partnership/ Code/Name	Secondary Displays– Partnership/ Code/Name	Alliance Availability: Display Trip
Single DEI 11	aaaa	Y	Y	Y
Multiple DEI 11s (aaaa, bbbb, cccc)	**	**	Y all	Y For each

Single Connections

DEI 11s filed on each flight segment	DEI 11 which is used for match	Neutral Availability: Partnership/ Code/Name	Secondary Displays– Partnership/ Code/Name	Alliance Availability– Display Trip
Seg 1: aaaa Seg 2: aaaa	aaaa	Y	Y	Y
Seg 1: aaaa Seg 2: none	n/a	N	N	N
Seg 1: none Seg 2: aaaa	n/a	N	N	N
Seg 1: aaaa, bbbb Seg 2: bbbb	bbbb	Y	Y bbbb only	Y
Seg 1: aaaa, bbbb Seg 2: bbbb, aaaa	aaaa bbbb	**	Y aaaa/bbbb	Y
Seg 1: aaaa, bbbb, cccc Seg 2: aaaa, cccc	aaaa cccc	**	Y aaaa/cccc	Y
Seg 1: aaaa, bbbb, cccc Seg 2: cccc, bbbb, aaaa	aaaa bbbb cccc	**	Y aaaa/bbbb/cccc	Y
Seg 1: aaaa Seg 2: bbbb	n/a	N	N	N

Double Connections

DEI 11s filed on each flight segment	DEI 11 which is used for match	Neutral Availability– Partnership/ Code/Name	Secondary Displays– Partnership/ Code /Name	Alliance Availability: Display Trip
Seg 1: aaaa Seg 2: aaaa Seg 3: aaaa	aaaa	Y	Y aaaa	Y
Seg 1: aaaa Seg 2: none Seg 3: none	n/a	N	N	N
Seg 1: none Seg 2: aaaa Seg 3: none	n/a	N	N	N
Seg 1: aaaa, bbbb Seg 2: bbbb Seg 3: none	n/a	N	N	N
Seg 1: aaaa, bbbb Seg 2: bbbb, aaaa Seg 3: none	n/a	N	N	N
Seg 1: aaaa, bbbb, cccc Seg 2: aaaa, cccc Seg 3: aaaa	aaaa	Y aaaa	Y aaaa	Y Aaaa
Seg 1: aaaa Seg 2: aaaa, bbbb Seg 3: bbbb	n/a	N	N	N
Seg 1: aaaa, bbbb, cccc Seg 2: cccc, bbbb, aaaa Seg 3: cccc	cccc	Y cccc	Y cccc	Y Cccc
Seg 1: aaaa, bbbb, cccc Seg 2: cccc, bbbb, aaaa Seg 3: aaaa, bbbb, cccc	aaaa bbbb cccc	**	Y aaaa/bbbb/cccc	Y aaaa/bbbb/cccc
Seg 1: aaaa, bbbb, cccc Seg 2: cccc, bbbb, aaaa Seg 3: bbbb, cccc	bbbb cccc	**	Y bbbb/cccc	Y bbbb/cccc
Seg 1: aaaa Seg 2: aaaa Seg 3: none	n/a	N	N	N
Seg 1: aaaa Seg 2: none Seg 3: aaaa	n/a	N	N	N
Seg 1: aaaa Seg 2: bbbb Seg 3: cccc	n/a	N	N	N

Plane Change without Aircraft Change

On a multi-leg flight, a Flight Designator need not relate to the operation of one single aircraft. Normally, a change of equipment en route is evident from the Aircraft Types used on each leg if the flight.

If, however, there is a change from one aircraft to another of the same type, the Data Element *'Plane Change without Aircraft Type Change'* (Data Element Identifier 210) should be used.

Example 1: Airlines require an aircraft change enroute to the same aircraft type.

Flight JJ 3332 is filed as a through-flight from LDB CWB GRU, with both non-stop legs displaying the aircraft equipment type. However for operational reasons, passengers are required to deplane at CWB and **reboard onto a different aircraft of the same aircraft type**.

JJ 3332 LDB.....>.....CWB.....>.....GRU

The Data Element Identifier 210 is placed on the leg where the Board Point has the Plane Change; in this case CWB.

Stating the Data Element Identifier 210 is all that is required as this implies the condition that passengers deplane and reboard the plane at CWB.

Example 2: When there is a requirement to clear customs and **reboard onto the same physical aircraft**. □

Flight FL5959 is filed as a through-flight from MSP SLC SYD, with both non-stop legs displaying the same aircraft equipment type. However for customs purposes passengers are required to deplane at SLC to clear customs, and will reboard onto the **same physical aircraft**.

FL5959 MSP.....>.....SLC.....>.....SYD

The Data Element Identifier 210 is placed on the leg where the **Board Point** has the Plane Change, in this case SLC.

Stating the Data Element Identifier 210 is all that is required as this implies the condition that passengers deplane and reboard the plane at SLC.

Time Mode

The main purpose of the Manual is to define standard schedule data. Handling procedures on how the information is processed internally by the recipient are not defined.

Information transmitted by a sender can be open to ambiguous interpretation by the recipient if not working under the same set of assumptions as the sender.

As a result, the input information may be accepted and falsely interpreted and then likely to incur penalties.

The ambiguous information is often returned to the sender for clarification and thus incurring additional costs to both parties.

To lessen possible sources of ambiguity with time applications, it is recommended that UTC times and days be used for the exchange of schedule information.

Airlines may, however, bilaterally agree to exchange their data in local times and days.

This section attempts to describe some possible sources of ambiguity.

When the Scheduled Time of Aircraft Departure (STD) is stated in Local Time and the recipient converts to UTC, or vice versa, the Period of Operation may need to be adjusted to maintain the correct Days of Operation around season boundaries and across Daylight Saving Time changes. If this is not done correctly, a lost day of operation and/or a day duplication may occur.

Note throughout this section the application of the rule defining Flight Number in Chapter 2, and particularly note that this rule applies to ALL STATIONS IN THE ROUTING of a flight. This means that, for ANY given STATION on ANY DATE a Carrier may have:

- NO MORE THAN ONE departure of a Flight Number in UTC time mode;
- NO MORE THAN ONE arrival of a Flight Number in UTC time mode;
- NO MORE THAN ONE departure of a Flight Number in LOCAL time mode;
- NO MORE THAN ONE arrival of a Flight Number in LOCAL time mode.

UTC/LT Relationship

For SSMs, the relationship between the (effective) Period of Operation expressed in UTC, and the (effective) Period of Operation expressed in Local Time (LT), should not be changed for an operating flight.

(If a cancellation causes a break in a chain of services, it may then be acceptable that a fresh input should imply a different UTC/Local Time Period of Operation relationship to that existing before the cancellation.)

Similarly, for ASMs, the relationship of Flight Identifier Date expressed in UTC and in LT should not be changed. This also applies where an ASM modifies a flight previously submitted by an SSM.

Extra care has to be taken when a timing change by ASM changes the UTC day and results in two services with the same Flight Identifier on the same UTC day.

Since the local time day does not change, no problem exists for reservations systems.

A scheduler may be tempted to use local time to avoid the UTC day problem but this does not solve the problem. The correct manner would be to show the service with the Operational Suffix **'Z'**.

The Operational Suffix **'Z'** applies to the UTC version of schedules and may be suppressed in commercial publications and systems that use LT for display purposes.

Suffix **'Z'** may be used in a data transmission regardless of whether the Time Mode used is UTC or LT.

If data is transmitted in LT and the receiving system needs to convert it to UTC, the lack of Suffix **'Z'** may cause problems when UTC day/date duplications occur.

Example:

Flight held in airline XY computer:

```
XY123 01APR 26MAY 1234567 JFK 1830 FRA 0755+1(local)
XY123 01APR 26MAY 1234567 JFK 2230 FRA 0555+1(UTC)
```

Airline XY wants to operate the Tuesday frequency two hours later.

Wrong Procedure	**Correct Procedure**
XY sends SSM	XY sends SSM
LT	UTC
TIM	CNL
XY123	XY123
01APR 26MAY 2	01APR 26MAY 2
JFK2030 FRA0955/1	//
The equivalent in UTC would be	NEW
XY123	XY123Z
02APR 27MAY 3	02APR 27MAY 3
JFK0030 FRA0755	JFK0030 FRA0755
There will now be two flights	Each flight on UTC day 3
XY123 on day 3 in UTC	can now be uniquely identified:- Flight XY123 Z dep 0030. Flight XY123 dep 2230.

Note: *The Operational Suffix **'Z'** may be suppressed from display in the LT version of the schedule.*

UTC Flight Number Duplication due to Daylight Saving Time

Airlines working on a Local Time basis should consider the problems that may be created for recipients working in UTC regarding Daylight Saving Time.

Example:

Flight XYZ123 operates SYD-AKL with a year-round local departure time 1030 from SYD.

Considering the application of Daylight Saving Time, the UTC schedule for the period 01JAN02-31DEC02 is:

```
XY123
01JAN02 29MAR02 1234567
...
SYD2330 AKL0230/1
```

— There is no flight on 30MAR02 in UTC Time Mode.

— From the DST shift onwards the flight will become an early morning (UTC) flight

```
XY123
31MAR02 26OCT02 1234567
...
SYD0030 AKL0330
```

— From the shift back to Standard Time the flight would again become a late evening (UTC) flight

```
XY123
26OCT02 31DEC02 1234567
...
SYD2330 AKL0230/1
```

However, in UTC Time Mode, there would be two flights departing on 26OCT02.

In order to overcome flight identification problems, a solution is provided by the separation of one of the two operations by the application of Operational Suffix **'Z'**.

The **'Z'** Operational Suffix may be suppressed from display in Local Time representations of the schedule, e.g. for reservations and publications purposes.

```
XY123Z
26OCT02 26OCT02 6
...
SYD2330 AKL0230/1
XY123
27OCT02 31DEC02 1234567
...
SYD2330 AKL0230/1
```

This may not be a complete solution since the level of sophistication of the computer system receiving the information may not be known. Receiving systems may have to allow for manual intervention to process messages such as those described above.

UTC Flight Number Duplication at Origin or Individual Stations

The basis of SSIM reference to a flight is the UTC and local date at the point of origin and Flight Numbers may therefore not be duplicated. This is also the case for arrivals and departures at each individual Station included in the itineraries of the same Flight Number.

However, the Reservations and Sales Systems are interested in segments that can be sold on a Local Time basis.

This means that each segment must be uniquely identifiable on a Local Time basis.

It frequently occurs that flights contain ambiguous information when considered on a UTC basis. This problem comes up more frequently on daily flights or flights operating on consecutive days:

Flight XY789 operates three times weekly SYD-MEL-HKG and four times weekly MEL-SYD-HKG with the same Flight Number for commercial reasons.

The local time schedule is:

```
LT                                  LT
XY789                               XY789
01APR 26MAY 246                     01APR 26MAY 1357
...                    and          ...
SYD1030 MEL1150                     MEL0915 SYD1035
MEL1300 HKG2005                     SYD1145 HKG1845
```

The UTC equivalent is:

```
UTC                                    UTC
XY789                                  XY789
01APR 26MAY 246                        31MAR 25MAY 2467
...                        and         ...
SYD0030 MEL0150                        MEL 2315 SYD0035/1
MEL 0300 HKG1205                       SYD01451 HKG1045/1
```

There are two originating XY789 flights on days 246 in UTC Time Mode and two XY789 departures at MEL on days 246. There is no duplication in Local Time mode.

Whilst it would be preferable to use a different Flight Number, commercial considerations may not allow a flight number change.

In this case, the Operational Suffix **'Z'** should be used on one of the flights to ensure that the flight can be handled in the receiving carrier's system on a UTC-basis.

The suffix **'Z'** may be suppressed from displaying in the LT version of the schedule or in reservations systems.

- Days `246 XY789Z SYD 0030 ...`
- Days `2467 XY789 MEL2315 ...`

Problems can also arise at en-route Stations on daily flights with the same routing each day, either caused by Daylight Saving Time change or having different departure times on one or more days. Flight AB123 operates daily LHR-SIN-SYD.

The local time schedule is:

```
LT                                     LT
AB123                                  AB123
01APR 26MAY 12457                      01APR 26MAY 36
...                        and         ...
LHR1200 SIN0805/1                      LHR1130 SIN0735/1
SIN0930/1 SYD1850/1                    SIN0900/1 SYD1820/1
```

The UTC schedule is:

```
UTC                                    UTC
AB123                                  AB123
01APR 26MAY 12457                      01APR 26MAY 36
...                        and         ...
LHR1100 SIN0005/1                      LHR1030 SIN2335
SIN0130/1 SYD0850/1                    SIN0100/1 SYD0820/1
```

There are two AB123 flights arriving in SIN on days 36 in UTC Time Mode. There is no duplication in Local Time mode.

Again, whilst it would be preferable to use a different Flight Number on days 36, commercial considerations may not allow a flight number change.

The Operational Suffix **'Z'** should again be used, on days 36, to ensure that the flight can be handled in the receiving carrier's system on a UTC-basis.

Local Date Duplication

The use of Operational Suffix **'Z'** does not solve duplicate day problems in Local Time mode.

Therefore the following situations require the use of a different Flight Designator since the day duplication appears only in the local time schedule affecting commercial publication and reservations systems.

— Airline XY operates a daily service XY991 LAX-HNL-AKL, departing Los Angeles at 2000 LT year round and from Honolulu at 2330 LT (0930 UTC) from early April to late October (Summer) and 0030 LT (1030 UTC) from late October to early April (Winter) because of local time changes at LAX.

  Every year, at the change-over from winter to summer, there will be a duplicate service on the change-over day with the last winter flight leaving at 0030 LT and the first summer service at 2330 LT.

  The first summer service would have to use a different Flight Designator e.g. XY9911.

— Airline DL operated a daily service DL072 LAX-JFK-FRA-ATH.

  During the scheduling season, the service was extended to originate at HNL and thus maintaining the daily service between LAX and ATH at all times.

  The respective schedules were as follows:

	LAST LAX ORIGINATOR DL072				**FIRST** HNL ORIGINATOR DL072			
	UTC		**LT**		**UTC**		**LT**	
HNL					TUE	0845	**MON**	2245
LAX					TUE	1403	TUE	0703
LAX	MON	1530	**MON**	0830	TUE	1530	TUE	0830
JFK	MON	2100	MON	1700	TUE	2100	TUE	1700
JFK	MON	2215	MON	1815	TUE	2215	TUE	1815
FRA	TUE	0540	TUE	0740	WED	0540	WED	0740
FRA	TUE	0650	TUE	0850	WED	0650	WED	0850
ATH	TUE	1035	TUE	1335	WED	1035	WED	1335

While there was no problem with the UTC schedule, the local time schedule had the two flights originating on the same day and this is not acceptable in reservations systems.

After the schedule change, the new routing would require a new Flight Designator to overcome the problem.

Airline AB operates a daily service AB123 SYD-SIN-LHR. It departs SYD at 1600 Local Time (0600 UTC) on days 12457, and at 1700 Local Time (0700 UTC) on days 36.

The Local time schedule is:

```
LT                                          LT
AB123                                       AB123
01APR 26MAY 12457                           01APR 26MAY 36
...                          and            ...
SYD1600 SIN2140                             SYD1700 SIN2240
SIN2310 LHR0640/1                           SIN0010/1 LHR 0740/1
```

The UTC schedule is:

```
UTC                                         UTC
AB123                                       AB123
01APR 26MAY 12457                           01APR 26MAY 36
...                          and            ...
SYD0600 SIN1340                             SYD0700 SIN1440
SIN1510 LHR0540/1                           SIN1610 LHR0640/1
```

There is no problem with the UTC schedule, but the Local Time schedule has two flights departing from SIN on days 47 and this is not acceptable in reservations systems.

A new Flight Designator is required for the flights which depart SYD days 36 in order to overcome the problem.

Summary

When day duplications occur in regular schedules or on an ad-hoc basis, problems can be overcome by use of:

— A different Flight Designator if it occurs in local time mode only.

— Operational Suffix **'Z'** if it occurs in UTC mode only.

It should also be noted that the use of leading zeros does not create a different Flight Number.

For example, Flight Numbers 123 and 0123 are the same.

Therefore, this cannot be used to resolve either the UTC or the local time day duplication problems.

Traffic Restriction Code D, E and G

Note: *Although the scenarios shown below only portray the application of Traffic Restriction Code G, they are also valid for application of Traffic Restriction Codes D and E with the added requirements that the use of Traffic Restriction Code D is qualified to make International connections only. Additionally Traffic Restriction Codes D and E allow Stopovers at the connect point.*

On-line Connection Scenario

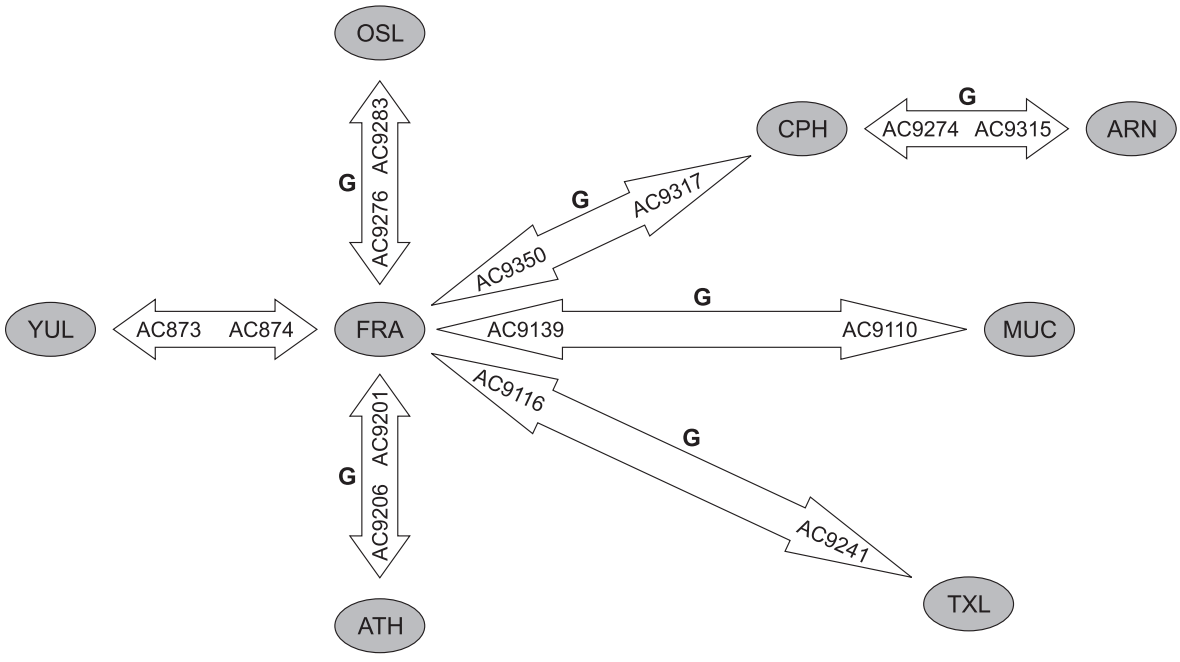

The following examples of on-line routings/connections may be constructed:

YUL-FRA-OSL
YUL-FRA-CPH
YUL-FRA-CPH-ARN
YUL-FRA-MUC
YUL-FRA-TXL
YUL-FRA-ATH

and vice versa

Traffic Restrictions, however, prohibit the following interline connections from being constructed:

ARN-CPH-FRA
ARN-CPH-FRA-ATH
ARN-CPH-FRA-OSL
ARN-CPH-FRA-MUC
ARN-CPH-FRA-TXL
CPH-FRA-OSL
CPH-FRA-MUC
CPH-FRA-TXL
CPH-FRA-ATH
OSL-FRA-MUC
OSL-FRA-ATH
OSL-FRA-TXL
MUC-FRA-ATH
MUC-FRA-TXL
TXL-FRA-ATH

and vice versa.

In order to restrict these connections, Traffic Restriction **'G'** is used as shown in the diagram above.

Interline Connection Scenario

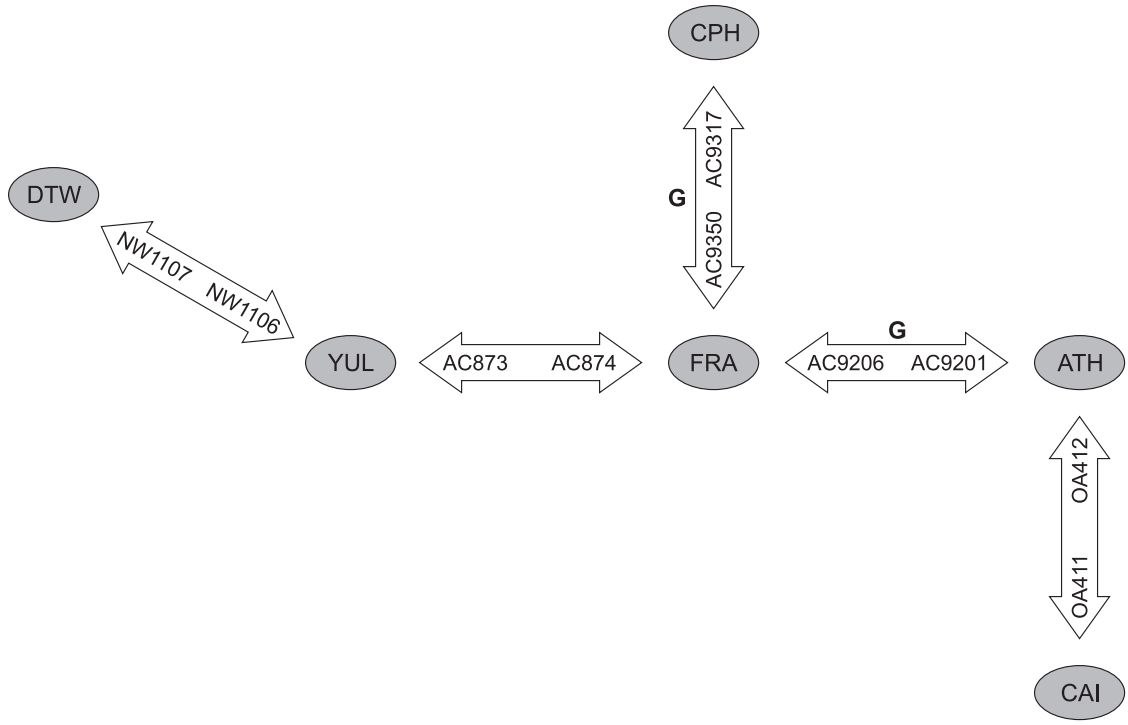

The following examples of interline routings/connections may be constructed:

DTW-YUL-FRA

DTW-YUL-FRA-CPH

DTW-YUL-FRA-ATH

and vice versa.

Traffic Restrictions, however, prohibit the following interline connections from being constructed:

DTW-YUL-FRA-ATH-CAI

YUL-FRA-ATH-CAI

CPH-FRA-ATH-CAI

FRA-ATH-CAI

and vice versa.

In order to restrict these connections, Traffic Restriction **'G'** is used as shown in the diagram above.

Traffic Restriction Code Qualifiers 710-712

The following presents examples of applying the following data elements on Traffic Restrictions:

- DEI 710—Traffic Restriction Qualifier at Board Point;
- DEI 711—Traffic Restriction Qualifier at Off Point;
- DEI 712—Traffic Restriction Qualifier at Board and Off Points.

Traffic Restrictions not including one of these Data Element Identifiers relate to the Board Point and/or the Off Point. DEI 710-712 make the Traffic Restriction specific to the Board Point (DEI 710), the Off Point (DEI 711) or both the Board and Off Points (DEI 712).

The examples show various combinations of Segments, Carriers, Traffic Restrictions and Traffic Restriction Qualifiers. The Traffic Restriction Qualifiers have been illustrated to reflect their DEI number. DEI 710 is shown to the **left** of the applicable Traffic Restriction, DEI 711 is shown on the **right** while DEI 712 is shown on both left and right to emphasize that the qualifier applies to **both** Board Point **and** Off Point.

Use of the DEI 710, 711 and 712 in the direct market:

Ref. No.	Carrier UA					Display ?	Explantion
	Board Point	DEI	Traffic Restr.	DEI	Off Point		
1	CPH		K		FRA	No	Required connection at CPH or FRA.
2	FRA	710	K		TXL	No	Required connection at FRA.
3	DUB		K	711	LHR	No	Required connection at LHR.
4	VIE	712	K	712	CPH	No	CPH No Required connection at VIE **and** CPH.

Use of the DEI 710, 711 and 712 to identify where the restriction applies to the segment:

Ref. No.	Carrier DL					Carrier DL				Display ?	Explantion
	Board Point	DEI	Traffic Restr.	DEI	Off/ Board Point	DEI	Traffic Restr.	DEI	Off Point		
5	DFW				CDG		Y		FCO	Yes	On-line connection exists at CDG (**or** FCO).
6	JFK				CDG	710	Y		MRS	Yes	On-line connection exists at CDG.
7	ATL				CDG		Y	711	NCE	No	Required on-line connection at NCE not included in trip.
8	ATL				CDG	712	Y	712	AMS	No	Required on-line connection at CDG **and** AMS (only CDG is on-line connection included in trip).

Use of Traffic Restriction G to prevent display of trips where all connections have the G restriction inbound and outbound:

Ref. No.	Carrier DL					Carrier DL				Display ?	Explantion
	Board Point	DEI	Traffic Restr.	DEI	Off/ Board Point	DEI	Traffic Restr.	DEI	Off Point		
9	BFL		G	711	LAX	710	G		SAN	No	Trafic restriction G exists inbound and outbound on all on-line connections for DL.
10	SAN		G	711	LAX		G		BFL	No	Traffic restriction G exists inbound and outbound on all on-line connections for DL.
11	SAN		G		LAX		G		FAT	No	Traffic restriction G exists inbound and outbound on all on-line connections for DL.

Ref. No.	Carrier UA					Carrier UA				Carrier UA				Display ?	Explantion
	Board Point	DEI	Traffic Restr.	DEI	Off/ Board Point	DEI	Traffic Restr.	DEI	Off/ Board Point	DEI	Traffic Restr.	DEI	Off Point		
12	LAX		G	711	HNL		G	711	NAN	710	G		RAR	Yes	On-line connections exist at HNL and NAN. No G restriction outbound from HNL for UA.

Ref. No.	Carrier AC					Carrier AC				Carrier AC				Display ?	Explantion
	Board Point	DEI	Traffic Restr.	DEI	Off/ Board Point	DEI	Traffic Restr.	DEI	Off/ Board Point	DEI	Traffic Restr.	DEI	Off Point		
13	LAX		G	711	HNL		G		NAN	710	G		RAR	No	The G restriction exists inbound and outbound for all AC connections.
14	LAX		Y	711	HNL		Y		NAN	710	Y		RAR	Yes	On-line connections exist at HNL and NAN.

Example of DEI 710 with Traffic Restriction Q:

Ref. No.	Carrier DL					Carrier DL				Carrier DL				Display ?	Explantion
	Board Point	DEI	Traffic Restr.	DEI	Off/ Board Point	DEI	Traffic Restr.	DEI	Off/ Board Point	DEI	Traffic Restr.	DEI	Off Point		
15	LAX				JFK				CDG	710	Q		MRS	Yes	International on-line connection/ stopover exists at CDG.

Example of DEI 712 requiring the segment to be used only for transferring passengers at both board and off points:

Ref. No.	Carrier UA					Carrier UA				Carrier UA				Display ?	Explantion
	Board Point	DEI	Traffic Restr.	DEI	Off/ Board Point	DEI	Traffic Restr.	DEI	Off/ Board Point	DEI	Traffic Restr.	DEI	Off Point		
16	VIE	712	G	712	CPH	712	G	712	BKK				NRT	No	On-line connection required at VIE.
17	ORD		Y	711	VIE	712	G	712	CPH	710	G		ARN	Yes	On-line connection exists at VIE. and CPH. **G** restricton does not exist in and out of all connect points.

Use of DEI 710 and 711 with Traffic Restriction G to allow the double connection to be displayed, but to restrict the single connection:

Ref. No.	Carrier DL					Carrier DL				Carrier DL				Display ?	Explantion
	Board Point	DEI	Traffic Restr.	DEI	Off/ Board Point	DEI	Traffic Restr.	DEI	Off/ Board Point	DEI	Traffic Restr.	DEI	Off Point		
18	BFL		G	711	LAX	710	G		SAN				SJD	Yes	On-line connection at LAX. **G** restriction does not exist for all DL connections.

Ref. No.	Carrier DL					Carrier DL				Display ?	Explantion
	Board Point	DEI	Traffic Restr.	DEI	Off/ Board Point	DEI	Traffic Restr.	DEI	Off Point		
19	BFL		G	711	LAX	710	G		SAN	No	Traffic Restriction **G** exists inbound and outbound on all on-line connections for DL.

Use of the Traffic Restriction G (or Y) with DEI 711 to prevent interline connections at the off points:

Ref. No.	Carrier NZ					Carrier NZ				Display ?	Explantion
	Board Point	DEI	Traffic Restr.	DEI	Off/ Board Point	DEI	Traffic Restr.	DEI	Off Point		
20	YVR		G	711	LAX				SYD	Yes	On-line connection exists at LAX. No Traffic Restriction **G** outbound from LAX.

Ref. No.	Carrier NZ					Carrier QF				Display ?	Explantion
	Board Point	DEI	Traffic Restr.	DEI	Off/ Board Point	DEI	Traffic Restr.	DEI	Off Point		
21	YVR		G	711	LAX				SYD	No	On-line connection required at LAX.

Example to show that the G restriction disallows trips which contain the restriction into and out of all connections for the same carrier:

Ref. No.	Carrier BA					Carrier AY				Carrier AY				Display ?	Explantion
	Board Point	DEI	Traffic Restr.	DEI	Off/ Board Point	DEI	Traffic Restr.	DEI	Off/ Board Point	DEI	Traffic Restr.	DEI	Off Point		
22	ABZ				GLA		G	711	LHR	710	G		LIS	No	All AY on-line connections have the **G** restriction into and out of the connection.
23	ABZ				GLA		G	711	LHR				HEL	Yes	On-line connection exists at LHR.

If a Y restriction were used in place of the G restriction in examples 22 and 23, the trips would be displayed:

Ref. No.	Carrier BA					Carrier AY				Carrier AY				Display ?	Explantion
	Board Point	DEI	Traffic Restr.	DEI	Off/ Board Point	DEI	Traffic Restr.	DEI	Off/ Board Point	DEI	Traffic Restr.	DEI	Off Point		
24	ABZ				GLA		Y	711	LHR	710	Y		LIS	Yes	On-line connection exists at LHR.
25	ABZ				GLA		Y	711	LHR				HEL	Yes	On-line connection exists at LHR.

Train Stations at Multi-Terminal Airports

Some multi-terminal airports have more than one train station.

For example, LHR has one train station serving terminals 1, 2 and 3, and another serving terminal 4.

This means that the schedule for a train service that serves both the LHR train stations will have more than one scheduled arrival and/or departure at LHR on the same day.

This can not be achieved under the same Flight Number - see definition of Flight Number in Chapter 2.

For example, Flight Designator 2E123 on routing QQP-LHR(TN)-LHR(4)-QQP (where TN and 4 are the Passenger Terminal Indicators).

This is clearly in contravention of the definition of Flight Number whereby the 2E123 has two scheduled arrivals and two scheduled departures from LHR on the same day although occurring at different Terminals.

In reservations and publication systems, the recommended solution is to split the schedule into 2E123 QQP-LHR(TN)-QQP, and 2E124 QQP-LHR(4)-QQP.

The 2E123 would be treated as the operating flight, and the 2E124 would be treated as a Duplicate (non-operational) flight.

Data Element Identifiers 10 and 50 and Traffic Restriction Codes should be used as appropriate.

→ *Refer to Appendix H: Duplicate Flight Legs*.

Withdrawal of AD HOC Schedule Changes

One of the SSIM principles regarding schedule updates is the precedence that ad hoc updates (ASM—Chapter 5) take over schedule changes, using SSM (Chapter 4) or SSIM Schedule Data Set (Chapter 7) features.

There are two different initial steps to realize the ad hoc priority in EDP schedule systems by either a **one level** or a **two level** database.

In a two level data base solution, the master data (SSM and data sets) are kept in one level and the ad-hoc data (ASM) are kept in a logically different level.

This allows a combined view of the current schedule data, where ad hoc schedules take precedence over the master data. It also allows a view onto the pure master data as they are kept unchanged by ASM schedules.

In a one level data base all ASM updates change the existing schedule data and are flagged as ad hoc to retain priority over master updates (i.e. the master changes are made around the ad hoc dates).

There are two possibilities to withdraw ASM-type updates:

ASM Withdrawal Indicator (see also Chapter 2 ASM Withdrawal Indicator)

The ASM Withdrawal Indicator (XASM) is used within SSM messages to wipe out all existing ad hoc schedule information for the appropriate Flight Designator and the relevant Period/Day(s) of Operation, potentially replacing it with new schedule information.

XASM is only to be used in conjunction with Action Identifiers SKD/NEW/RPL/CNL.

Example:

```
SSM
UTC
25MAY00006E001/REF92/0234
RPL XASM
AF345
J 310 FCMBK.Y230
26AUG 20OCT 123
CDG0850 MRS1005
```

Change Reason Code RTNS (see also Chapter 2 Change Reason)

The Change Reason Code RTNS is used within ASM messages to reinstate the 'original' (basic) schedule.

This procedure requires the reconstruction of the master data, therefore restricting the use of the RTNS facility to Action Identifiers NEW, RPL and CNL only in the case of a one level data base.

Irrespective of the precedence of ASM schedule data for the same flights, two level data bases maintaining the master data intact are able to process the RTNS facility in conjunction with all Action Identifiers.

Action Identifier NEW is required to reinstate a flight cancelled by ASM.

It must contain all the data to reconstruct a one day master period.

The ad hoc flag has to be eliminated.

Example:

```
ASM
UTC
26SEP00123E005/REF 245/92
NEW RTNS
LH123/25OCT
J 733 C88
FRA0800 MUC0915
```

Action Identifier RPL is normally required to change the flight to its original or current master data and to open it for further master updates.

The ad hoc flag has to be eliminated.

Example:

```
ASM
LT
26SEP00123E005/REF 245/92
RPL RTNS
BA1265/11NOV
J 733 C88
FRA0800 LHR0930
```

Action Identifier CNL is **only** required to cancel an additional flight created by ASM and to open this flight for a potential creation by master input.

Example:

```
ASM
LT
23AUG00423C003/REF 045/92
CNL RTNS
LT120/12DEC
```

In every case, the ad hoc flag has to be eliminated in order to remove the precedence of the ad hoc schedule information over the master schedule information.

APPENDIX I
REGION CODES

This Appendix lists the Countries and US States that constitute these Regions.

1. Schengen Agreement Countries (Region Code SCH)

Country	ISO Country Code
Aland Islands	AX
Austria	AT
Belgium	BE
Czech Republic	CZ
Denmark	DK
Estonia	EE
Finland	FI
France	FR
Germany	DE
Greece	GR
Hungary	HU
Iceland	IS
Italy	IT
Latvia	LV
Lithuania	LT
Luxembourg	LU
Malta	MT
Netherlands	NL
Norway	NO
Portugal	PT
Poland	PL
Slovakia	SK
Slovenia	SI
Spain and Canary Islands	ES
Sweden	SE
Switzerland	CH

2. IATA Traffic Conference Areas (TC)

2.1 IATA Region Codes and Names

Region Code	Name	TC
AFR	Africa	TC2
CAR	Caribbean	TC1
CEM	Central America	TC1
EUR	Europe	TC2
JAK	Japan/Korea	TC3
MDE	Middle East	TC2
NOA	North America	TC1
SAS	South Asian Subcontinent	TC3
SEA	South East Asia	TC3
SOA	South America	TC1
SWP	South West Pacific	TC3

2.2 Country Name and Region Code List (sorted by Country)

Country Name	ISO Country Code	TC	Region Code and Name
Afghanistan	AF	TC3	SAS - South Asian Subcontinent
Aland Islands	AX	TC2	EUR - Europe
Albania	AL	TC2	EUR - Europe
Algeria	DZ	TC2	EUR - Europe
American Samoa	AS	TC3	SWP - South West Pacific
Andorra	AD	TC2	EUR - Europe
Angola	AO	TC2	AFR - Africa
Anguilla	AI	TC1	CAR - Caribbean
Antarctica	AQ		(No IATA Area)
Antigua and Barbuda	AG	TC1	CAR - Caribbean
Argentina	AR	TC1	SOA - South America
Armenia	AM	TC2	EUR - Europe
Aruba	AW	TC1	CAR - Caribbean
Australia	AU	TC3	SWP - South West Pacific
Austria	AT	TC2	EUR - Europe
Azerbaijan	AZ	TC2	EUR - Europe
Bahamas	BS	TC1	CAR - Caribbean
Bahrain	BH	TC2	MDE - Middle East
Bangladesh	BD	TC3	SAS - South Asian Subcontinent
Barbados	BB	TC1	CAR - Caribbean
Belarus	BY	TC2	EUR - Europe
Belgium	BE	TC2	EUR - Europe
Belize	BZ	TC1	CEM - Central America
Benin	BJ	TC2	AFR - Africa
Bermuda	BM	TC1	CAR - Caribbean
Bhutan	BT	TC3	SAS - South Asian Subcontinent
Bolivia, Plurinational State of	BO	TC1	SOA - South America
Bonaire, Saint Eustatius and Saba	BQ	TC1	CAR - Caribbean
Bosnia and Herzegovina	BA	TC2	EUR - Europe
Botswana	BW	TC2	AFR - Africa
Bouvet Island	BV	TC2	AFR - Africa
Brazil	BR	TC1	SOA - South America
British Indian Ocean Territory	IO	TC2	AFR - Africa
Brunei Darussalam	BN	TC3	SEA - South East Asia
Bulgaria	BG	TC2	EUR - Europe
Burkina Faso	BF	TC2	AFR - Africa
Burundi	BI	TC2	AFR - Africa

Country Name	ISO Country Code	TC	Region Code and Name
Cambodia	KH	TC3	SEA - South East Asia
Cameroon	CM	TC2	AFR - Africa
Canada	CA	TC1	NOA - North America
Cape Verde	CV	TC2	AFR - Africa
Cayman Islands	KY	TC1	CAR - Caribbean
Central African Republic	CF	TC2	AFR - Africa
Chad	TD	TC2	AFR - Africa
Chile	CL	TC1	SOA - South America
China, People's Republic of	CN	TC3	SEA - South East Asia
Chinese Taipei	TW	TC3	SEA - South East Asia
Christmas Island	CX	TC3	SEA - South East Asia
Cocos (Keeling) Islands	CC	TC3	SEA - South East Asia
Colombia	CO	TC1	SOA - South America
Comoros	KM	TC2	AFR - Africa
Congo	CG	TC2	AFR - Africa
Congo, Democratic Republic of	CD	TC2	AFR - Africa
Cook Islands	CK	TC3	SWP - South West Pacific
Costa Rica	CR	TC1	CEM - Central America
Côte d'Ivoire	CI	TC2	AFR - Africa
Croatia	HR	TC2	EUR - Europe
Cuba	CU	TC1	CAR - Caribbean
Curacao	CW	TC1	CAR - Caribbean
Cyprus	CY	TC2	EUR - Europe
Czech Republic	CZ	TC2	EUR - Europe
Denmark	DK	TC2	EUR - Europe
Djibouti	DJ	TC2	AFR - Africa
Dominica	DM	TC1	CAR - Caribbean
Dominican Republic	DO	TC1	CAR - Caribbean
Ecuador	EC	TC1	SOA - South America
Egypt	EG	TC2	MDE - Middle East
El Salvador	SV	TC1	CEM - Central America
Equatorial Guinea	GQ	TC2	AFR - Africa
Eritrea	ER	TC2	AFR - Africa
Estonia	EE	TC2	EUR - Europe
Ethiopia	ET	TC2	AFR - Africa
Falkland Islands	FK	TC1	SOA - South America
Faroe Islands	FO	TC2	EUR - Europe
Fiji	FJ	TC3	SWP - South West Pacific
Finland	FI	TC2	EUR - Europe

Country Name	ISO Country Code	TC	Region Code and Name
France	FR	TC2	EUR - Europe
French Guiana	GF	TC1	SOA - South America
French Polynesia	PF	TC3	SWP - South West Pacific
French Southern Territories	TF	TC2	AFR - Africa
Gabon	GA	TC2	AFR - Africa
Gambia	GM	TC2	AFR - Africa
Georgia	GE	TC2	EUR - Europe
Germany	DE	TC2	EUR - Europe
Ghana	GH	TC2	AFR - Africa
Gibraltar	GI	TC2	EUR - Europe
Greece	GR	TC2	EUR - Europe
Greenland	GL	TC1	NOA - North America
Grenada	GD	TC1	CAR - Caribbean
Guadeloupe	GP	TC1	CAR - Caribbean
Guam	GU	TC3	SEA - South East Asia
Guatemala	GT	TC1	CEM - Central America
Guinea	GN	TC2	AFR - Africa
Guinea-Bissau	GW	TC2	AFR - Africa
Guyana	GY	TC1	SOA - South America
Haiti	HT	TC1	CAR - Caribbean
Heard and McDonald Islands	HM	TC2	AFR - Africa
Honduras	HN	TC1	CEM - Central America
Hong Kong (SAR), China	HK	TC3	SEA - South East Asia
Hungary	HU	TC2	EUR - Europe
Iceland	IS	TC2	EUR - Europe
India	IN	TC3	SAS - South Asian Subcontinent
Indonesia	ID	TC3	SEA - South East Asia
Iran, Islamic Republic of	IR	TC2	MDE - Middle East
Iraq	IQ	TC2	MDE - Middle East
Ireland	IE	TC2	EUR - Europe
Israel	IL	TC2	MDE - Middle East
Italy	IT	TC2	EUR - Europe
Jamaica	JM	TC1	CAR - Caribbean
Japan	JP	TC3	Japan/Korea
Jordan	JO	TC2	MDE - Middle East
Kazakhstan	KZ	TC3	SEA - South East Asia
Kenya	KE	TC2	AFR - Africa

Country Name	ISO Country Code	TC	Region Code and Name
Kiribati	KI	TC3	SWP - South West Pacific
Korea, Democratic People's Rep. of	KP	TC3	JAK - Japan/Korea
Korea, Republic of	KR	TC3	JAK - Japan/Korea
Kuwait	KW	TC2	MDE - Middle East
Kyrgyzstan	KG	TC3	SEA - South East Asia
Lao People's Democratic Republic	LA	TC3	SEA - South East Asia
Latvia	LV	TC2	EUR - Europe
Lebanon	LB	TC2	MDE - Middle East
Lesotho	LS	TC2	AFR - Africa
Liberia	LR	TC2	AFR - Africa
Libya (Libyan Arab Jamahiriya)	LY	TC2	AFR - Africa
Liechtenstein	LI	TC2	EUR - Europe
Lithuania	LT	TC2	EUR - Europe
Luxembourg	LU	TC2	EUR - Europe
Macao (SAR), China	MO	TC3	SEA - South East Asia
Macedonia (FYROM)	MK	TC2	EUR - Europe
Madagascar	MG	TC2	AFR - Africa
Malawi	MW	TC2	AFR - Africa
Malaysia	MY	TC3	SEA - South East Asia
Maldives	MV	TC3	SAS - South Asian Subcontinent
Mali	ML	TC2	AFR - Africa
Malta	MT	TC2	EUR - Europe
Marshall Islands	MH	TC3	SEA - South East Asia
Martinique	MQ	TC1	CAR - Caribbean
Mauritania	MR	TC2	AFR - Africa
Mauritius	MU	TC2	AFR - Africa
Mayotte	YT	TC2	AFR - Africa
Mexico	MX	TC1	NOA - North America
Micronesia	FM	TC3	SEA - South East Asia
Moldova, Republic of	MD	TC2	EUR - Europe
Monaco	MC	TC2	EUR - Europe
Mongolia	MN	TC3	SEA - South East Asia
Montenegro	ME	TC2	EUR - Europe
Montserrat	MS	TC1	CAR - Caribbean
Morocco	MA	TC2	EUR - Europe
Mozambique	MZ	TC2	AFR - Africa
Myanmar	MM	TC3	SEA - South East Asia

Country Name	ISO Country Code	TC	Region Code and Name
Namibia	NA	TC2	AFR - Africa
Nauru	NR	TC3	SWP - South West Pacific
Nepal	NP	TC3	SAS - South Asian Subcontinent
Netherlands	NL	TC2	EUR - Europe
New Caledonia	NC	TC3	SWP - South West Pacific
New Zealand	NZ	TC3	SWP - South West Pacific
Nicaragua	NI	TC1	CEM - Central America
Niger	NE	TC2	AFR - Africa
Nigeria	NG	TC2	AFR - Africa
Niue	NU	TC3	SWP - South West Pacific
Norfolk Island	NF	TC3	SWP - South West Pacific
Northern Mariana Islands	MP	TC3	SEA - South East Asia
Norway	NO	TC2	EUR - Europe
Oman	OM	TC2	MDE - Middle East
Pakistan	PK	TC3	SAS - South Asian Subcontinent
Palau	PW	TC3	SEA - South East Asia
Palestine, State of	PS	TC2	MDE - Middle East
Panama	PA	TC1	SOA - South America
Papua New Guinea	PG	TC3	SWP - South West Pacific
Paraguay	PY	TC1	SOA - South America
Peru	PE	TC1	SOA - South America
Philippines	PH	TC3	SEA - South East Asia
Pitcairn Island	PN	TC3	SWP - South West Pacific
Poland	PL	TC2	EUR - Europe
Portugal	PT	TC2	EUR - Europe
Puerto Rico	PR	TC1	CAR - Caribbean
Qatar	QA	TC2	MDE - Middle East
Reunion	RE	TC2	AFR - Africa
Romania	RO	TC2	EUR - Europe
Russian Federation (East of the Urals)[1]	XU	TC3	SEA - South East Asia
Russian Federation (West of the Urals)[1]	RU	TC2	EUR - Europe
Rwanda	RW	TC2	AFR - Africa

Country Name	ISO Country Code	TC	Region Code and Name
Saint Barthelemy	BL	TC1	CAR - Caribbean
Saint Helena	SH	TC2	AFR - Africa
Saint Kitts and Nevis	KN	TC1	CAR - Caribbean
Saint Lucia	LC	TC1	CAR - Caribbean
Saint Martin	MF	TC1	CAR - Caribbean
Saint Pierre and Miquelon	PM	TC1	NOA - North America
Saint Vincent and the Grenadines	VC	TC1	CAR - Caribbean
Samoa	WS	TC3	SWP - South West Pacific
San Marino	SM	TC2	EUR - Europe
Sao Tome and Principe	ST	TC2	AFR - Africa
Saudi Arabia	SA	TC2	MDE - Middle East
Senegal	SN	TC2	AFR - Africa
Serbia	RS	TC2	EUR - Europe
Seychelles	SC	TC2	AFR - Africa
Sierra Leone	SL	TC2	AFR - Africa
Singapore	SG	TC3	SEA - South East Asia
Sint Maarten	SX	TC1	CAR - Caribbean
Slovakia	SK	TC2	EUR - Europe
Slovenia	SI	TC2	EUR - Europe
Solomon Islands	SB	TC3	SWP - South West Pacific
Somalia	SO	TC2	AFR - Africa
South Africa	ZA	TC2	AFR - Africa
South Georgia and the South Sandwich Island	GS	TC1	SOA - South America
South Sudan	SS	TC2	MDE - Middle East
Spain and Canary Islands	ES	TC2	EUR - Europe
Sri Lanka	LK	TC3	SAS - South Asian Subcontinent
Sudan	SD	TC2	MDE - Middle East
Suriname	SR	TC1	SOA - South America
Svalbard & Jan Mayen Island	SJ	TC2	EUR - Europe
Swaziland	SZ	TC2	AFR - Africa
Sweden	SE	TC2	EUR - Europe
Switzerland	CH	TC2	EUR - Europe
Syrian Arab Republic	SY	TC2	MDE - Middle East
Tajikistan	TJ	TC3	SEA - South East Asia
Tanzania, United Rep. of	TZ	TC2	AFR - Africa
Thailand	TH	TC3	SEA - South East Asia
Timor-Leste	TL	TC3	SEA - South East Asia
Togo	TG	TC2	AFR - Africa
Tokelau	TK	TC3	SWP - South West Pacific
Tonga	TO	TC3	SWP - South West Pacific

Country Name	ISO Country Code	TC	Region Code and Name
Trinidad and Tobago	TT	TC1	CAR - Caribbean
Tunisia	TN	TC2	EUR - Europe
Turkey	TR	TC2	EUR - Europe
Turkmenistan	TM	TC3	SEA - South East Asia
Turks and Caicos Islands	TC	TC1	CAR - Caribbean
Tuvalu	TV	TC3	SWP - South West Pacific
Uganda	UG	TC2	AFR - Africa
Ukraine	UA	TC2	EUR - Europe
United Arab Emirates	AE	TC2	MDE - Middle East
United Kingdom	GB	TC2	EUR - Europe
United States of America	US	TC1	NOA - North America
Uruguay	UY	TC1	SOA - South America
US Minor Outlying Islands	UM	TC1	NOA - North America
Uzbekistan	UZ	TC3	SEA - South East Asia
Vanuatu	VU	TC3	SWP - South West Pacific
Vatican City State	VA	TC2	EUR - Europe
Venezuela, Bolivarian Republic of	VE	TC1	SOA - South America
Viet Nam	VN	TC3	SEA - South East Asia
Virgin Islands, British	VG	TC1	CAR - Caribbean
Virgin Islands, U.S.	VI	TC1	CAR - Caribbean
Wallis and Futuna Islands	WF	TC3	SWP - South West Pacific
Western Sahara	EH	TC2	EUR - Europe
Yemen, Republic of	YE	TC2	MDE - Middle East
Zaire (see Congo, Democratic Republic)		TC2	AFR - Africa
Zambia	ZM	TC2	AFR - Africa
Zimbabwe	ZW	TC2	AFR - Africa

[1] For all other purposes, Country Code RU is used exclusively to identify the Russian Federation.

2.3 IATA Traffic Conference Area and Region Code List (sorted by Region Code)

Country Name	ISO Country Code	TC	Region Code and Name
Antarctica	AQ		(No IATA Area)
Anguilla	AI	TC1	CAR - Caribbean
Antigua and Barbuda	AG	TC1	CAR - Caribbean
Aruba	AW	TC1	CAR - Caribbean
Bahamas	BS	TC1	CAR - Caribbean
Barbados	BB	TC1	CAR - Caribbean
Bermuda	BM	TC1	CAR - Caribbean
Bonaire, Saint Eustatius and Saba	BQ	TC1	CAR - Caribbean
Cayman Islands	KY	TC1	CAR - Caribbean
Cuba	CU	TC1	CAR - Caribbean
Curacao	CW	TC1	CAR - Caribbean
Dominica	DM	TC1	CAR - Caribbean
Dominican Republic	DO	TC1	CAR - Caribbean
Grenada	GD	TC1	CAR - Caribbean
Guadeloupe	GP	TC1	CAR - Caribbean
Haiti	HT	TC1	CAR - Caribbean
Jamaica	JM	TC1	CAR - Caribbean
Martinique	MQ	TC1	CAR - Caribbean
Montserrat	MS	TC1	CAR - Caribbean
Puerto Rico	PR	TC1	CAR - Caribbean
Saint Barthelemy	BL	TC1	CAR - Caribbean
Saint Kitts and Nevis	KN	TC1	CAR - Caribbean
Saint Lucia	LC	TC1	CAR - Caribbean
Saint Martin	MF	TC1	CAR - Caribbean
Saint Vincent and the Grenadines	VC	TC1	CAR - Caribbean
Sint Maarten	SX	TC1	CAR - Caribbean
Trinidad and Tobago	TT	TC1	CAR - Caribbean
Turks and Caicos Islands	TC	TC1	CAR - Caribbean
Virgin Islands, British	VG	TC1	CAR - Caribbean
Virgin Islands, U.S.	VI	TC1	CAR - Caribbean
Belize	BZ	TC1	CEM - Central America
Costa Rica	CR	TC1	CEM - Central America
El Salvador	SV	TC1	CEM - Central America
Guatemala	GT	TC1	CEM - Central America

Country Name	ISO Country Code	TC	Region Code and Name
Honduras	HN	TC1	CEM - Central America
Nicaragua	NI	TC1	CEM - Central America
Canada	CA	TC1	NOA - North America
Greenland	GL	TC1	NOA - North America
Mexico	MX	TC1	NOA - North America
Saint Pierre and Miquelon	PM	TC1	NOA - North America
United States of America	US	TC1	NOA - North America
US Minor Outlying Islands	UM	TC1	NOA - North America
Argentina	AR	TC1	SOA - South America
Bolivia, Plurinational State of	BO	TC1	SOA - South America
Brazil	BR	TC1	SOA - South America
Chile	CL	TC1	SOA - South America
Colombia	CO	TC1	SOA - South America
Ecuador	EC	TC1	SOA - South America
Falkland Islands	FK	TC1	SOA - South America
French Guiana	GF	TC1	SOA - South America
Guyana	GY	TC1	SOA - South America
Panama	PA	TC1	SOA - South America
Paraguay	PY	TC1	SOA - South America
Peru	PE	TC1	SOA - South America
South Georgia and the South Sandwich Island	GS	TC1	SOA - South America
Suriname	SR	TC1	SOA - South America
Uruguay	UY	TC1	SOA - South America
Venezuela, Bolivarian Republic of	VE	TC1	SOA - South America
Angola	AO	TC2	AFR - Africa
Benin	BJ	TC2	AFR - Africa
Botswana	BW	TC2	AFR - Africa
Bouvet Island	BV	TC2	AFR - Africa
British Indian Ocean Territory	IO	TC2	AFR - Africa
Burkina Faso	BF	TC2	AFR - Africa
Burundi	BI	TC2	AFR - Africa
Cameroon	CM	TC2	AFR - Africa
Cape Verde	CV	TC2	AFR - Africa
Central African Republic	CF	TC2	AFR - Africa
Chad	TD	TC2	AFR - Africa
Comoros	KM	TC2	AFR - Africa
Congo	CG	TC2	AFR - Africa
Congo, Democratic Republic of	CD	TC2	AFR - Africa

Country Name	ISO Country Code	TC	Region Code and Name
Côte d'Ivoire	CI	TC2	AFR - Africa
Djibouti	DJ	TC2	AFR - Africa
Equatorial Guinea	GQ	TC2	AFR - Africa
Eritrea	ER	TC2	AFR - Africa
Ethiopia	ET	TC2	AFR - Africa
French Southern Territories	TF	TC2	AFR - Africa
Gabon	GA	TC2	AFR - Africa
Gambia	GM	TC2	AFR - Africa
Ghana	GH	TC2	AFR - Africa
Guinea	GN	TC2	AFR - Africa
Guinea-Bissau	GW	TC2	AFR - Africa
Heard and McDonald Islands	HM	TC2	AFR - Africa
Kenya	KE	TC2	AFR - Africa
Lesotho	LS	TC2	AFR - Africa
Liberia	LR	TC2	AFR - Africa
Libya (Libyan Arab Jamahiriya)	LY	TC2	AFR - Africa
Madagascar	MG	TC2	AFR - Africa
Malawi	MW	TC2	AFR - Africa
Mali	ML	TC2	AFR - Africa
Mauritania	MR	TC2	AFR - Africa
Mauritius	MU	TC2	AFR - Africa
Mayotte	YT	TC2	AFR - Africa
Mozambique	MZ	TC2	AFR - Africa
Namibia	NA	TC2	AFR - Africa
Niger	NE	TC2	AFR - Africa
Nigeria	NG	TC2	AFR - Africa
Reunion	RE	TC2	AFR - Africa
Rwanda	RW	TC2	AFR - Africa
Saint Helena	SH	TC2	AFR - Africa
Sao Tome and Principe	ST	TC2	AFR - Africa
Senegal	SN	TC2	AFR - Africa
Seychelles	SC	TC2	AFR - Africa
Sierra Leone	SL	TC2	AFR - Africa
Somalia	SO	TC2	AFR - Africa
South Africa	ZA	TC2	AFR - Africa
Swaziland	SZ	TC2	AFR - Africa
Tanzania, United Rep. of	TZ	TC2	AFR - Africa
Togo	TG	TC2	AFR - Africa
Uganda	UG	TC2	AFR - Africa
Zaire (see Congo, Democratic Republic)		TC2	AFR - Africa

Country Name	ISO Country Code	TC	Region Code and Name
Zambia	ZM	TC2	AFR - Africa
Zimbabwe	ZW	TC2	AFR - Africa
Åland Islands	AX	TC2	EUR - Europe
Albania	AL	TC2	EUR - Europe
Algeria	DZ	TC2	EUR - Europe
Andorra	AD	TC2	EUR - Europe
Armenia	AM	TC2	EUR - Europe
Austria	AT	TC2	EUR - Europe
Azerbaijan	AZ	TC2	EUR - Europe
Belarus	BY	TC2	EUR - Europe
Belgium	BE	TC2	EUR - Europe
Bosnia and Herzegovina	BA	TC2	EUR - Europe
Bulgaria	BG	TC2	EUR - Europe
Croatia	HR	TC2	EUR - Europe
Cyprus	CY	TC2	EUR - Europe
Czech Republic	CZ	TC2	EUR - Europe
Denmark	DK	TC2	EUR - Europe
Estonia	EE	TC2	EUR - Europe
Faroe Islands	FO	TC2	EUR - Europe
Finland	FI	TC2	EUR - Europe
France	FR	TC2	EUR - Europe
Georgia	GE	TC2	EUR - Europe
Germany	DE	TC2	EUR - Europe
Gibraltar	GI	TC2	EUR - Europe
Greece	GR	TC2	EUR - Europe
Hungary	HU	TC2	EUR - Europe
Iceland	IS	TC2	EUR - Europe
Ireland	IE	TC2	EUR - Europe
Italy	IT	TC2	EUR - Europe
Latvia	LV	TC2	EUR - Europe
Liechtenstein	LI	TC2	EUR - Europe
Lithuania	LT	TC2	EUR - Europe
Luxembourg	LU	TC2	EUR - Europe
Macedonia (FYROM)	MK	TC2	EUR - Europe
Malta	MT	TC2	EUR - Europe
Moldova, Republic of	MD	TC2	EUR - Europe
Monaco	MC	TC2	EUR - Europe
Montenegro	ME	TC2	EUR - Europe
Morocco	MA	TC2	EUR - Europe
Netherlands	NL	TC2	EUR - Europe
Norway	NO	TC2	EUR - Europe

Country Name	ISO Country Code	TC	Region Code and Name
Poland	PL	TC2	EUR - Europe
Portugal	PT	TC2	EUR - Europe
Romania	RO	TC2	EUR - Europe
Russian Federation (West of the Urals)	RU	TC2	EUR - Europe
San Marino	SM	TC2	EUR - Europe
Serbia	RS	TC2	EUR - Europe
Slovakia	SK	TC2	EUR - Europe
Slovenia	SI	TC2	EUR - Europe
Spain and Canary Islands	ES	TC2	EUR - Europe
Svalbard & Jan Mayen Island	SJ	TC2	EUR - Europe
Sweden	SE	TC2	EUR - Europe
Switzerland	CH	TC2	EUR - Europe
Tunisia	TN	TC2	EUR - Europe
Turkey	TR	TC2	EUR - Europe
Ukraine	UA	TC2	EUR - Europe
United Kingdom	GB	TC2	EUR - Europe
Vatican City State	VA	TC2	EUR - Europe
Western Sahara	EH	TC2	EUR - Europe
Bahrain	BH	TC2	MDE - Middle East
Egypt	EG	TC2	MDE - Middle East
Iran, Islamic Republic of	IR	TC2	MDE - Middle East
Iraq	IQ	TC2	MDE - Middle East
Israel	IL	TC2	MDE - Middle East
Jordan	JO	TC2	MDE - Middle East
Kuwait	KW	TC2	MDE - Middle East
Lebanon	LB	TC2	MDE - Middle East
Oman	OM	TC2	MDE - Middle East
Palestine, State of	PS	TC2	MDE - Middle East
Qatar	QA	TC2	MDE - Middle East
Saudi Arabia	SA	TC2	MDE - Middle East
South Sudan	SS	TC2	MDE - Middle East
Sudan	SD	TC2	MDE - Middle East
Syrian Arab Republic	SY	TC2	MDE - Middle East
United Arab Emirates	AE	TC2	MDE - Middle East
Yemen, Republic of	YE	TC2	MDE - Middle East
Korea, Democratic People's Rep. of	KP	TC3	JAK - Japan/Korea
Korea, Republic of	KR	TC3	JAK - Japan/Korea
Japan	JP	TC3	JAK - Japan/Korea

Country Name	ISO Country Code	TC	Region Code and Name
Afghanistan	AF	TC3	SAS - South Asian Subcontinent
Bangladesh	BD	TC3	SAS - South Asian Subcontinent
Bhutan	BT	TC3	SAS - South Asian Subcontinent
India	IN	TC3	SAS - South Asian Subcontinent
Maldives	MV	TC3	SAS - South Asian Subcontinent
Nepal	NP	TC3	SAS - South Asian Subcontinent
Pakistan	PK	TC3	SAS - South Asian Subcontinent
Sri Lanka	LK	TC3	SAS - South Asian Subcontinent
Brunei Darussalam	BN	TC3	SEA - South East Asia
Cambodia	KH	TC3	SEA - South East Asia
China, People's Republic of	CN	TC3	SEA - South East Asia
Chinese Taipei	TW	TC3	SEA - South East Asia
Christmas Island	CX	TC3	SEA - South East Asia
Cocos (Keeling) Islands	CC	TC3	SEA - South East Asia
Guam	GU	TC3	SEA - South East Asia
Hong Kong (SAR, China)	HK	TC3	SEA - South East Asia
Indonesia	ID	TC3	SEA - South East Asia
Kazakhstan	KZ	TC3	SEA - South East Asia
Kyrgyzstan	KG	TC3	SEA - South East Asia
Lao People's Democratic Republic	LA	TC3	SEA - South East Asia
Macao (SAR, China)	MO	TC3	SEA - South East Asia
Malaysia	MY	TC3	SEA - South East Asia
Marshall Islands	MH	TC3	SEA - South East Asia
Micronesia	FM	TC3	SEA - South East Asia
Mongolia	MN	TC3	SEA - South East Asia
Myanmar	MM	TC3	SEA - South East Asia
Northern Mariana Islands	MP	TC3	SEA - South East Asia
Palau	PW	TC3	SEA - South East Asia
Philippines	PH	TC3	SEA - South East Asia
Russian Federation (East of the Urals)[1]	XU	TC3	SEA - South East Asia
Singapore	SG	TC3	SEA - South East Asia
Tajikistan	TJ	TC3	SEA - South East Asia
Thailand	TH	TC3	SEA - South East Asia
Timor-Leste	TL	TC3	SEA - South East Asia
Turkmenistan	TM	TC3	SEA - South East Asia
Uzbekistan	UZ	TC3	SEA - South East Asia
Viet Nam	VN	TC3	SEA - South East Asia

Country Name	ISO Country Code	TC	Region Code and Name
American Samoa	AS	TC3	SWP - South West Pacific
Australia	AU	TC3	SWP - South West Pacific
Cook Islands	CK	TC3	SWP - South West Pacific
Fiji	FJ	TC3	SWP - South West Pacific
French Polynesia	PF	TC3	SWP - South West Pacific
Kiribati	KI	TC3	SWP - South West Pacific
Nauru	NR	TC3	SWP - South West Pacific
New Caledonia	NC	TC3	SWP - South West Pacific
New Zealand	NZ	TC3	SWP - South West Pacific
Niue	NU	TC3	SWP - South West Pacific
Norfolk Island	NF	TC3	SWP - South West Pacific
Papua New Guinea	PG	TC3	SWP - South West Pacific
Pitcairn Island	PN	TC3	SWP - South West Pacific
Samoa	WS	TC3	SWP - South West Pacific
Solomon Islands	SB	TC3	SWP - South West Pacific
Tokelau	TK	TC3	SWP - South West Pacific
Tonga	TO	TC3	SWP - South West Pacific
Tuvalu	TV	TC3	SWP - South West Pacific
Vanuatu	VU	TC3	SWP - South West Pacific
Wallis and Futuna Islands	WF	TC3	SWP - South West Pacific

[1] For all other purposes, Country Code RU is used exclusively to identify the Russian Federation.

APPENDIX J
INFORMATION CODES FOR USE IN THE AIRPORT COORDINATION PROCESS

Additional Information Codes

AA	Cleared time—Arrival
AD	Cleared time—Departure
CA	Coordinator Reason—Arrival
CD	Coordinator Reason—Departure
FA	Flexibility Range—Arrival
FD	Flexibility Range—Departure
ID	Airport Slot ID (Only applicable to GCR message–see Appendix K)
IDA	Airport Slot ID (Arrival—Only applicable to GCR message–See Appendix K)
IDD	Airport Slot ID (Departure—Only applicable to GCR message–See Appendix K)
MT	Minimum Ground Time
NA	Reference number arrival
ND	Reference number departure
RA	Requested Timings—Arrival
RD	Requested Timings—Departure
RE	Aircraft Registration
SA	Arrival (followed by free text information)
SD	Departure (followed by free text information)
TA	Passenger Terminal Identifier—Arrival
TD	Passenger Terminal Identifier—Departure

Coordinator Reason Codes (SAL/SAQ/SCR)

AA	Apron capacity
AB	ATC restriction
CF	Curfew
GA	Gate capacity
GRD	Adjustment due to minimum ground time requirement
HA	High security flight restriction
NA	Night allocation
NB	Noise ban

NE	New entrant status under the provisions of the EU Regulation 95/93 Art 2 b ii as amended by Regulation (EC) No. 793/2004, or as covered in local legislation that will have precedence
OK	Cleared as requested (SAL/SCR only)
PA	Post SC coordination for ad hoc
QT	Quota limitations
R6A	Runway limit
R6D	Runway departure limit
RA	Runway congestion (general code)
Rnnn	Runway congestion—nnn denotes the minute limitation expressed in minutes (i.e. R020 20 minutes; R120 120 minutes)
SE	Security
TA	Terminal congestion (general code)
Tnnn	Terminal congestion—nnn denotes the minute limitation expressed in minutes (i.e. T020 20 minutes; T120 120 minutes)
UA	Unable to allocate slot for miscellaneous reason
WA	Waitlist—No slot available due to multiple reasons, flight held on Waitlist

Coordinator Reason Codes (SHL)

N80	Failure to use slots on at least 80% of occasions
NP	No recognizable period
MU	Misuse of slots
NE	New entrant status under the provisions of the EU Regulation 95/93 Art 2 b ii as amended by Regulation (EC) No. 793/2004, or as covered in local legislation that will have precedence

APPENDIX K
GENERAL AVIATION SLOT CLEARANCE REQUEST

General

The requirement for General Aviation to obtain slots at Level 3 Airports and the lack, in the main, of these aircraft operators having their own Flight Designator has led to a hybrid of systems being used for General Aviation Slot clearances.

The following information aims to provide a generic message type for the request for, amendment of and deletion of slots by General Aviation operators and the relevant Coordinators.

The message is called the GCR - General (Aviation) Clearance Request.

GCR Message Principles

Mandatory Principles

The following list of principles applies to the GCR message:

- The GCR message does not have a season indicator in the header.
- The GCR message only uses ICAO codes for aircraft and airports.
- The GCR message does not contain a frequency rate indicator.
- The GCR message creators reference use REG or FLT to indicate use of registration or a flight number.
- The GCR message is only to be used after the relevant SRD (Slot Return Deadline)–see the IATA Website, http://www.iata.org slots, for a free copy of the Worldwide Slot Guidelines which list these dates. △
- The GCR message uses the following action codes described in Chapter 6 of SSIM:

GCR Message	
Airline	**Coordinator**
C Schedule to be changed	**H** Holding
D Delete schedule	**K** Confirmation
N New schedule	**U** Refusal
R Revised schedule	**W** Unable to reconcile flight information
	X Cancellation
	T Allocated subject to conditions □

- The GCR message for domestic (same country) flights where slots are required at both departure airport and arrival airport will contain the slot request for both these airports within one message.
- For GCR communication using E-mail the GCR message should be in plain text placed directly in the E-mail body. No attachments or special characters should be used.

Optional Principles

The following list of principles will apply to the GCR message. However these may be amended as per the notes below as long as this has been agreed in advance by the operator and relevant coordinator on a bilateral basis or due to the implementation of a Local Airport Rule.

- The GCR message is in UTC (Local Time may be permitted on bilateral agreement using /LT in Creators Reference Line)
- The GCR message is in single day format only (Periods of operation may be allowed on bilateral agreement)
- The GCR will not contain an overmidnight indicator (This may be incorporated in the message when periods are allowed on a bilateral basis)
- The GCR has no turnaround information (This may be permitted on a bilateral basis usually when stand/apron coordination is required)
- The GCR message may use all relevant tags listed in SSIM Appendix J, including the specific GCR only related tag 'Airport Slot ID(s)'
- The GCR message may contain an email address in the creators reference to facilitate automatic response from the Coordinators system.

Message Use/Flows

New slot request

Operator:

The Aircraft Operator will decide on whether to use a Flight Designator plus Flight Number or the Aircraft Registration. The Operator will also need to determine if there is a requirement to clear both departure and arrival slots on the same message. This occurs in the case where the flight is operating within the same country (domestic flight) and both departure and arrival airports are Level 3 Airports. (See first examples below)

Examples of:

Message type for operation under Registration and International Flight:

```
GCR
/REG/flights@swissga.com
EDDF
N HBIEV 08JUN 010G159 0900LSZH D
SI Special Information End of message
```

Message type for operation under Flight Designator plus Flight Number and international flight:

```
GCR
/FLT
EDDF
N NJE123 08JUN 010G159 0900LSZH D
SI Special Information End of message
```

Message type for operation under Registration and domestic flight to two Level 3 Airports:

```
GCR
/REG
EDDF
N HBIEV 08JUN 010G159 0900EDDM D
EDDM
NHBIEV 08JUN 010G159 EDDF1000 D
SI Special Information End of message
```

Message type for operation under Flight Designator plus Flight Number and domestic flight to two Level 3 Airports;

```
GCR
/FLT
EDDF
N NJE123 08JUN 010G159 0900EDDM D
EDDM
NNJE123 08JUN 010G159 EDDF1000 D
SI Special Information End of message
```

Coordinator

The coordinator will respond in one of the following ways:

Confirm the slot time using action code K:

```
GCR
/FLT
EDDF
K NJE123 08JUN 010G159 0900LSZH D
SI Special Information End of message
```

Allocate the slot time using action code T (to indicate the slot is allocated subject to conditions): ☐

```
GCR
/FLT
EDDF
T NJE123 08JUN 010G159 0900LSZH D
SI Special Information End of message
```

Unable to offer requested time but is able to confirm the nearest available slot using action code U/K combination:

```
GCR
/FLT
EDDF
U NJE123 08JUN 010G159 0900LSZH D
K NJE123 08JUN 010G159 0930LSZH D
SI Special Information End of message
```

Unable to confirm any slot time for the flight:

```
GCR
/FLT
EDDF
U NJE123 08JUN 010G159 0900LSZH D
SI Special Information End of message
```

Delete an allocated slot

Operator

To delete an allocated slot, the Operator will use the same format message as used to obtain the slot using action D and ensuring the details match the slot held.

For International flight:

```
GCR
/REG
EDDF
D HBIEV 08JUN 010G159 0900LSZH D
SI Special Information End of message
```

For Domestic Flight:

```
GCR
/REG
EDDF
D HBIEV 08JUN 010G159 0900EDDM D
EDDM
DHBIEV 08JUN 010G159 EDDF1000 D
SI Special Information End of message
```

Coordinator

The coordinator will confirm the deletion of the slot using action code X:

```
GCR
/REG
EDDF
X HBIEV 08JUN 010G159 0900LSZH D
SI Special Information End of message
```

Should the Coordinator be unable to match the cancellation message with any slot held in the coordination database, the Coordinator will respond with action W against the GCR messages details supplied by the operator:

```
GCR
/REG
EDDF
W HBIEV 08JUN 010G159 0900LSZH D
SI Special Information End of message
```

Should the Coordinator be unable to match the cancellation message with any slot held in the coordination database, but does find a close match to the details, the Coordinator will reply with a W/H action code combination indicating the GCR messages details unable to be matched and the slot details found:

```
GCR
/REG
EDDF
W HBIEV 08JUN 010G159 0900LSZH D
H HBIEV 08JUN 010G159 0920LSZH D
SI Special Information End of message
```

Change an allocated slot

Operator

To change an allocated slot, the Operator will use the same format message as used to obtain the slot using action C and R where the C line is the existing slot clearance and the R line is the new slot details requiring clearance.

For International flight:

```
GCR
/REG
EDDF
C HBIEV 08JUN 010G159 0900LSZH D
R HBIEV 08JUN 010G159 0930LSZH D
SI Special Information End of message
```

For Domestic flight:

```
GCR
/REG
EDDF
C HBIEV 08JUN 010G159 0900EDDM D
R HBIEV 08JUN 010G159 0930EDDM D
EDDM
CHBIEV 08JUN 010G159 EDDF1000 D
RHBIEV 08JUN 010G159 EDDF1030 D
SI Special Information End of message
```

Coordinator

The Coordinator will confirm the change of the slot using actions code X and K where the X line denotes the old slot being removed from the coordination database and K the new slot data being confirmed:

```
GCR
/REG
EDDF
X HBIEV 08JUN 010G159 0900LSZH D
K HBIEV 08JUN 010G159 0930LSZH D
SI Special Information End of message
```

Should the Coordinator be able to allocate the requested slot but only subject to conditions then the Coordinator will confirm the change of the slot using actions code X and T where the X line denotes the old slot being removed from the coordination database and T the new slot data being allocated subject to conditions:

```
GCR
/REG
EDDF
X HBIEV 08JUN 010G159 0900LSZH D
T HBIEV 08JUN 010G159 0930LSZH D
SI Special Information End of message
```

Should the Coordinator be unable to confirm the new slot details, but is able to confirm the nearest available slot, the Coordinator will use an action code X/U/K combination where the X line denotes the old slot being removed from the coordination database, the U line the new request which is not possible and K the new slot data being confirmed:

```
GCR
/REG
EDDF
X HBIEV 08JUN 010G159 0900LSZH D
U HBIEV 08JUN 010G159 0930LSZH D
K HBIEV 08JUN 010G159 0915LSZH D
SI Special Information End of message
```

Should the coordinator be unable to confirm the new slot details, the Coordinator will use an action code H/U combination where the H line denotes the old slot being *retained* in the coordination database and the U line the new request which is not possible:

```
GCR
/REG
EDDF
H HBIEV 08JUN 010G159 0900LSZH D
U HBIEV 08JUN 010G159 0930LSZH D
SI Special Information End of message
```

The coordinator will respond with GCR messages with W or W/H combinations should they be unable to reconcile the Operator's C line with the slots held in the coordination database.

Slots Allocated Subject To Conditions □

When a coordinator has allocated a slot with conditions using Action Code **T** the Operator will have a time frame to meet these conditions. If the conditions are met the coordinator will confirm the slot using Action Code **K**.

If the Operator is unable to meet the conditions within the given time frame, and following a discussion between parties, the coordinator may use Action Code **X** to cancel the slot allocation.

Examples of Bilaterally agreed Message formats:

Turnaround format message using local time designator

The following example demonstrates the use of the Local Time indicator and a flight in turnaround format using registration.

```
GCR
//LT/REG
CYYZ
CHBIEV 08JUN 010G159 KPIT0700 0900CYVR DD △
RHBIEV 08JUN 010G159 KPIT0730 0930CYVR DD △
```

The coordinators response may include Reason Code tags from Appendix J of SSIM:

```
GCR
//LT/REG
CYYZ
XHBIEV 08JUN 010G159 KPIT0700 0900CYVR DD △
UHBIEV 08JUN 010G159 KPIT0730 0930CYVR DD △
KHBIEV 08JUN 010G159 KPIT0745 0930CYVR DD △
/ RA.0730 CA.R15/
```

Turnaround format message using Flight Numbers

The following example demonstrates the use of flight numbers in turnaround format:

```
GCR
/FLT
EBBR
CNJE123 NJE678 08JUN 010G159 EGKK0700 0900GMMX DD
RNJE123 NJE678 08JUN 010G159 EGKK0730 0930GMMX DD
```

The coordinators response may include Reason Code tags from Appendix J of SSIM:

```
GCR
/FLT
EBBR
XNJE123 NJE678 08JUN 010G159 EGKK0700 0900GMMX DD
UNJE123 NJE678 08JUN 010G159 EGKK0730 0930GMMX DD
KNJE123 NJE678 08JUN 010G159 EGKK0745 0930GMMX DD
/ RA.0730 CA.R15/
```

Airport Slot ID TAG example

Certain coordinators will use the Airport Slot ID tag from Appendix J for their General Aviation Slot clearances. The Airport Slot ID tag consists of 14 alphanumeric characters. The first 4 characters are always the 4 letter ICAO code of the airport for which the slot has been allocated followed by 10 other alphanumeric characters. The meaning of these characters will be dependent on the structure devised by the coordination organization that issued the slot. However they will always be unique to the arrival or the departure for the operator on the specific date at the specified airport.

The type of Airport Slot ID used is at the discretion of the coordinator, either the 'ID' format for a flight or the 'IDA' / 'IDD' format for a turnaround flight where separate IDs are used for the arrival and departure flights.

When used by the coordinator the Operator must repeat the Airport Slot ID tag and number on all subsequent GCR messages as it becomes a mandatory field.

Operator request for a domestic flight:

```
GCR
/REG
EDDF
N HBEIV 08JUN 010G159 0900EDDS D
EDDS
NHBIEV 08JUN 010G159 EDDF0945 D
SI Special Information End of message
```

Coordinators response with Airport Slot ID Tags:

```
GCR
/REG
EDDF
K HBIEV 08JUN 010G159 0900EDDS D/ ID.EDDF2004070001/
EDDS
KHBIEV 08JUN 010G159 EDDF0945 D/ ID.EDDS2004070001/
SI Special Information End of message
```

Operator subsequently deletes slots repeating the Airport Slot ID tag in the message:

```
GCR
/REG
EDDF
D HBIEV 08JUN 010G159 0900EDDS D/ ID.EDDF2004070001/
EDDS
DHBIEV 08JUN 010G159 EDDF0945 D/ ID.EDDS2004070001/
SI Special Information End of message
```

Turnaround format using Airport Slot ID TAGs:

Operator request:

```
GCR
/REG
LFMN
NHBEIV 08JUN 010G159 EDDF0800 0900EDDF DD
SI Special Information End of message
```

If required, the coordinators Response can include separate slot IDs for both the arrival and departure:

```
GCR
/REG
LFMN
KHBEIV 08JUN 010G159 EDDF0800 0900EDDF DD
/ IDA.LFMNACOH000123 IDD.LFMNDCOH000124/
SI Special Information End of message
```

GIR (General Aviation Information Request/Reply) Message

On occasions operators may wish to enquire what slots are held for their own aircraft or for what General Aviation Slots are held for a period of time during a particular day. The Coordinator may also wish to provide an unsolicited list of slots held to an operator. In these instances the data exchange will be made using a GIR. The same processes as the SSIM Chapter 6 SIR message will be used with the following exception:

- The generated GIR will only contain slots held by General Aviation flights and will not contain a mix of these flights and flights by other Non General Aviation operators.
- The GIR request for a time period is limited to one day only, a range of dates is not permitted.
- The use of the Registration (REG) or Flight Number (FLT) indicators in the header will indicate the types of slots held to be returned in the GIR from the coordinator. If the operator does not use the indicator then the coordinator will revert with all General Aviation slots held in their database which match the GIR request's criteria.
- The GIR Reply message formats should be the same as those used in the GCR message, including the optional use of tag data lines.

Examples:

Operator requesting specific flight information using a FLT GIR request

```
GIR
/FLT
LPPT
QGN1215 GN1215 07MAY
SI Special Information End of message
```

Coordinator response (flight held in turnaround format due parking restrictions at Lisbon)

```
GIR
/FLT
LPPT
HGN1215 GN1215 07MAY 012CL60 GLRB0145 0245EGGW DD/ RE. GLWDC/
SI Special Information End of message
```

Operator requesting specific flight information using a REG GIR request for specific date

```
GIR
/REG
LPPT
QGLWDC 10JUN
SI Special Information End of message
```

Coordinator response (flight held in turnaround format due parking restrictions at Lisbon)

```
GIR
/REG
LPPT
HGLWDC 10JUN 012CL60 DIYO2200 2300EGGW DD
```

SI Special Information End of message

Operator requesting specific flight information using a REG GIR request for a specific date and time period

```
GIR
/REG
LPMN
Q 10JUN10JUN 0000007 1000 1200
```

SI Special Information End of message

Coordinator response

```
GIR
/REG
LFMN
HGBIEA 10JUN 010G159 EGGW1030 1105LEMG DD
HSXFAO 10JUN 010G159 LGIR1115 D
HN18GHT 10JUN 010G159 KPIT1130 D
```

SI Special Information End of message

Operator requesting specific flight information using a FLT GIR request for a specific date and time period, for General Aviation flights only.

```
GIR
/FLT
LFMN
QQQQ QQQ 10JUN10JUN 0000007 1000 1200
```

SI Special Information End of message

Coordinator response

```
GIR
/FLT
LFMN
HLX123 10JUN 010G159 EGGW1030 1105LEMG DD/ RE.GBLNX/
HGN001 10JUN 010G159 LGIR1115 D / RE.HFGT/
HGN002 10JUN 010G159 KPIT1130 D / RE.N108PL/
```

SI Special Information End of message

Operator requesting specific flight information using a GIR request for a specific date and time period, for all General Aviation flights.

```
GIR
/
LFMN
QQQQ QQQ 10JUN10JUN 0000007 1000 1200
```

SI Special Information End of message

Coordinator response

```
GIR
/FLT
LFMN
HLX123 10JUN 010G159 EGGW1030 1105LEMG DD/ RE.GBLNX/
HFGIEA 10JUN 009PA34 LFML1045 1110LFBO DD
HGN001 10JUN 010G159 LGIR1115 D / RE.HFGT/
H DFGRT 10JUN 005CL60 1125EDDC D
HGN002 10JUN 010G159 KPIT1130 D / RE.N108ST/
```

SI Special Information End of message

Coordinator Unsolicited GIR in REG format

```
GIR
/REG
LFMN
HFBEIV 08JUN 010G159 EDDF0800 0900LEPA DD
/ IDA.LFMNACOH000123 IDD.LFMNDCOH000124/
HFBEIV 08JUN 010G159 LEPA1920 2000EDDF DD
/ IDA.LFMNACOH000134 IDD.LFMNDCOH000135/
```

SI Special Information End of message

Coordinator Unsolicited GIR in FLT format

```
GIR
/FLT
EBBR
HNJE677 NJE678 08JUN 010G159 EGKK0700 0900GMMX DD
/ RA.0730 CA.R15 RE.GOIEA /
HNJE101 NJE6103 08JUN 010G159 EGCC1930 2015LEPA DD/ RE.FGHTY/
```

SI Special Information End of message

Translation of ICAO aircraft and airports into IATA format for standard Chapter Six messages

There will be instances when Airlines or other business partners request information about the slots held by individual coordinators using standard SSIM Chapter 6 message formats such as SIR and WIR. In these cases, the slot information held in the coordinators database using ICAO codes, specifically aircraft and airports, will need to be translated into IATA formats to meet the SSIM Chapter 6 message format requirements.

Currently all ICAO aircraft and airports do not have a one for one equivalent under IATA's coding practice so generic codes will be used for the translation purposes where necessary.

The Generic Code for Carrier Code is–**GN**

The Generic Code for General Aviation Aircraft is–**GAA**

The Generic Code for Airports is–**XUD**

When using the Generic Carrier code, the Coordinator's system will create a flight number for the General Aviation flights sequentially starting from 001. This numbering will only be created within the particular SIR/WIR message. Flights therefore may have different numbers in subsequent messages.

An example of an SIR using the above codes is shown below:

```
SIR
/
S07
10JUL
MUC
H8U0912 8U0913 17SEP17SEP 1000000 155320 TIPTIP1000 1110TIPTIP JJ
H GN001 17SEP17SEP 1000000 001GAA 1005XUDXUD D
HBA8036 17SEP17SEP 1000000 110735 JERJER1010 J
HGN002 17SEP17SEP 1000000 001GAA XUDXUD 1010 D
HGN003 GN004 17SEP17SEP 1000000 010GAA XUDXUD0555 1000XUDXUD DD
/ CA.R60 CD.R60 RA.0615 RD.0935/
```

APPENDIX X
IATA PADIS XML STANDARDS

△

To support different business processes with new message specifications, a Passenger and Airport Data Interchange Standards (PADIS) Board was established by IATA Resolution 783 to develop and maintain Electronic Data Interchange (EDI) message standards, eXtensible Markup Language (XML) specifications and also future specifications for electronic interchange of data for airline passenger travel and for airport related passenger service activity.

This development is an ongoing process coordinated with SISC, SPWG and JSAG for approval.

IATA PADIS XML standards can be located on the PADIS Extranet following the registration process under the URL: www.iata.org/padis.

Business Requirement Documents, publications of the completed XML schemas and associated Implementation Guides are available from the PADIS Extranet site.

All of the documentation and XML schemas described in the sections below are available for download from the above website.

Standard Schemas

The completed Schemas can be found on the PADIS extranet site (www.iata.org/padis.)

Implementation Guides

The completed Implementation Guides can be found on the PADIS extranet site. *When an Implementation Guide has not yet been defined for a business process, the original Business Requirements Document used to develop the schemas may serve as a useful reference for the potential schema users*.

Slot Coordination XML Standards

XML schemas have been developed to support following business process:

Initial slot allocation

Aspects Covered

This business process covers the following areas:

- Production and transmission of the Slot Historic List (SHL)
- Airlines contesting the historic schedules provided by the controllers
- Airlines initial submission of schedule data (SCR)
- Production and transmission of the Slot Allocation List (SAL)

Standard Schemas

The required schemas have been published.

Implementation Guide

An Implementation Guide has not yet been defined for this business process.

Slot Clearance

Aspects Covered

This business process covers the following areas:

- Airline Schedule Change Requests (SCR)
- Coordinators Response to Schedule Change Request (SCR)
- Airlines Acceptance/Declination of Offers (SCR)
- Coordinators confirmation of offer acceptance/declination (SCR)
- Coordinator notifying airline that an offer has been cancelled
- Airline Schedule Availability Request (SAQ)
- Coordinators Response to Schedule Availability Request (SAQ)
- Airline Waitlist Change Request (WCR)
- Coordinators Response to Waitlist Change Request (WCR)
- General/Business Aviation Change Requests (GCR)
- Coordinators Response to General/Business Aviation Change Request (GCR)

Standard Schemas

The required schemas have been published.

Implementation Guide

An Implementation Guide has been published for this business process containing a number of worked examples.

Slot Information

Aspects Covered

This business process covers the following areas:

- Airline Schedule Information Requests (SIR)
- Coordinators Response to Schedule Information Request (SIR)
- Airline Waitlist Information Request (WIR)
- Coordinators Response to Waitlist Information Request (WIR)

Standard Schemas

The required schemas have been published.

Implementation Guide

An Implementation Guide has not yet been defined for this business process.

Slot Utilization

Aspects Covered

This business process covers the following areas:

- Airline request for current status of schedules with respect to the 80/20 rules.
- Coordinators response to request for current status of airline's schedules with respect to the 80/20 rules.
- Coordinators unsolicited notification of current status of airline's schedules with respect to the 80/20 rules.
- Coordinators unsolicited notification of the “historic baseline” for an airline's schedules.

Standard Schemas

The publication of these schemas is expected in March 2013.

Implementation Guide

An Implementation Guide has not yet been defined for this business process.

Dynamic Update Of External Databases

Aspects Covered

This business process covers the following areas:

- Coordinator dynamically transmitting details of schedule data changes to a third party.

Standard Schemas

The required schemas have been published.

Implementation Guide

An Implementation Guide has not yet been defined for this business process.

Slot Improvement

Aspects Covered

This business process covers the following areas:

- Airline proposes potential swap/improvement to another airline(s)
- Airline acceptance/rejection of proposed swap/improvement
- Submission of slot improvement request to coordinator (SCR //SWAP)
- Coordinator makes slot improvement offer to all parties involved
- Airlines response to swap/improvement proposed by coordinator
- Final notification of changes made

Standard Schemas

The required schemas have been published.

Implementation Guide

An Implementation Guide has not yet been defined for this business process.

Runway Capacity/Availability

Aspects Covered

This business process covers the following areas:

- Airline requests details of runway capacity/utilisation/availability, the request could be for detailed capacity/utilisation/availability or summarised capacity/utilisation/availability across multiple airport constraints.
- Coordinator response to airline's request for runway capacity/utilisation/availability.

Standard Schemas

The required schemas have been published.

Implementation Guide

An Implementation Guide has not yet been defined for this business process.

Passenger Terminal Capacity/Availability

Aspects Covered

This business process covers the following areas:

- Airline requests details of terminal capacity/utilisation/availability, the request could be for detailed capacity/utilisation/availability or summarised capacity/utilisation/availability across multiple airport terminal constraints.
- Coordinator response to airline's request for terminal capacity/utilisation/availability.

Defined Schemas

The schemas for this business process have not yet been defined.

Implementation Guide

An Implementation Guide has not yet been defined for this business process.

Schedules Information Data eXchange XML Standards

Aspects Covered

Develops business requirements and maintains the implementation guide for XML schemas for Scheduling Messages, Chapters 4, 5, and 7 of SSIM.

Standard Schemas

The required schemas have been published.

Implementation Guide

An Implementation Guide has been published for this business process containing a number of worked examples.

ATTACHMENT 1
SISC PARTICIPANTS

I. Airline Members

Attachment 1 contains a listing of Airline Members and Non-Airline Observers attending the Schedules Information Standards Committee. IATA Member Airlines and its main SISC Representative are marked with an asterisk. The list is divided into two sections:

I Airline Members

II Non-Airline Observers

If you have any amendment to your contact details below, please send an e-mail to SSIM@iata.org.

Postal address	Representative Name and Title	TTY Tel Fax E-mail
AIR CANADA 730 Chemin de la Cote-Vertu Dorval, Quebec H4Z1Y9 Canada	Marc Bricault Direct Distribution Analyst	TTY:— Tel: +1 (514) 463-5307 Fax: +1 (514) 422 0237 E-mail: Marc.Bricault@aircanada.ca
AIR CANADA 730 Cote Vertu West Dorval, Quebec H4Y1C2 Canada	Yves Frederic Business Analyst	TTY:— Tel: +1 (514) 422 4659 Fax:— E-mail: yves.frederic@aircanada.ca
AIR CANADA* 7373 COTE VERTU WEST ST. LAURENT, QUEBEC H4S 1Z3 Canada	Volker Wackernagel Manager, Slots and Intermediate Scheduling	TTY: YULSPAC Tel: +1 (514) 422 6336 Fax: +1 (514) 422 5049 E-mail: volker.wackernagel@aircanada.ca
Additional TTY and/or E-mail authorised to send SCRs: slots@aircanada.ca		
ALITALIA* Via Pier Paolo Racchetti Fiumicino, Rome 00054 Italy	Denise Scafidi Slot Manager	TTY: ROMEHAZ Tel: +39 (06) 65632493 Fax: +39 (06) 65637721 E-mail: Scafidi.Olimpia.Denise@alitalia.it
Additional TTY and/or E-mail authorised to send SCRs: romehaz@alitalia.it		

Postal address	Representative Name and Title	TTY Tel Fax E-mail
ALL NIPPON AIRWAYS* 1-5-2 Higashi-Shimbashi Minato-ku Tokyo 105-7133 Japan	Nobuhiko Kozakai Manager, Network Planning	TTY:— Tel: +81 (3) 6735-1377 Fax:— E-mail: n.kozakai@ana.co.jp
AMADEUS 485, Route du Pin Montard-Les Bouillides Sophia Antipolis - Cedex Provence-Alpes-Cote d'Azur 06902 France	Pascal Vitrolles	TTY:— Tel: +33 497-042-132 Fax:— E-mail: pascal.vitrolles@amadeus.com
AMERICAN AIRLINES* P.O. Box 619612 MD 5544 DFW Airport TX 75261- 9612 United States	John Marquet Manager, Schedule Resources and Publication	TTY:— Tel: +1 (817) 931-6776 Fax: +1 (817) 931-6670 E-mail: john.marquet@aa.com
AUSTRIAN* Head Office P.O. Box 100 A-1300 Vienna-Airport Austria	Alexander Pour Head of Midterm Network Scheduling	TTY: VIERCOS Tel: +43 (5) 1766 12492 Fax: +43 (5) 1766 512492 E-mail: alexander.pour@austrian.com
BRITISH AIRWAYS P.L.C. Waterside (HEA1) Buckinghamshire UB7 0GB London United Kingdom	Alan Campbell SLOT PLANNING MANAGER	TTY:— Tel: +44 (20) 87386790 Fax:— E-mail: alan.campbell@ba.com
DELTA AIR LINES 1030 Delta Blvd Dept 663 Atlanta GA 30354 United States	Glen Bell Manager, Schedule Distribution	TTY:— Tel: +1 (404) 773 3605 Fax: +1 (404) 677 6015 E-mail: glen.bell@delta.com
DELTA AIR LINES 1030 Delta Blvd Dept 663 Atlanta GA 30354 United States	Allene Jones Team Leader	TTY:— Tel: +1 (404) 714 0716 Fax: +1 (404) 715 2338 E-mail: allene.jones@delta.com

Postal address	Representative Name and Title	TTY Tel Fax E-mail
DEUTSCHE LUFTHANSA AG* Dept. FRA ID/D-S Lufthansa Aviation Center 60546 Frankfurt/Main Germany	Ralf Baerwalde Team Manager Schedule Management	TTY:— Tel: +49 (69) 696-4942 Fax: +49 (69) 696-33267 E-mail: ralf.baerwalde@dlh.de
DEUTSCHE LUFTHANSA AG FRA LR/S-K Lufthansa Aviation Center Building 366, Airport Ring Frankfurt 60528 Germany	Yanki Puersuen Infrastructure Costs and Slot Management	TTY:— Tel: +49 (69) 696 8623 Fax: +49 (69) 696 98 8623 E-mail: yanki.puersuen@dlh.de
DEUTSCHE LUFTHANSA AG* Lufthansa Aviation Center Frankfurt/Main 60546 Germany	Kiomi Spriestersbach Schedule Management	TTY:— Tel: +49 (15) 1589 30519 Fax: +49 (15) 696 33267 E-mail: kiomi.spriestersbach@ dlh.de
FEDEX EXPRESS* 3680 Hacks Cross Road Building H, First Floor Memphis Tennessee 38125 United States	David Branch Global Linehaul Specialist	TTY: MEMASFX Tel: +1 (901) 434 8668 Fax: +1 (901) 434 9426 E-mail: dbbranch@fedex.com
FINNAIR OYJ* HEL NO/61 FIN Finnair Vantaa 01531 Finland	Reija Lehti Manager, Schedule Distribution	TTY: HELNOAY Tel: +358 408219927 Fax: +358 818 8736 E-mail: reija.lehti@finnair.com
HAHN AIR* An Der Trift 65 Dreieich Hessen 63303 Germany	Celia Roser Consultant	TTY:— Tel: +49 6103 5013 177 Fax:— E-mail: c.roser@hahnair.com
HAHN AIR An Der Trift 65 Dreieich Hessen 63303 Germany	Renate Weber	TTY:— Tel: +49 6103 5013 177 Fax:— E-mail: r.weber@hahnair.com

Postal address	Representative Name and Title	TTY Tel Fax E-mail
IBERIA Velazquez 130 Madrid 28006 Spain	Leticia Garcia Slot Manager	TTY:— Tel: +34 915 877 124 Fax:— E-mail: lgarciaerguin@iberia.es
IBERIA* Martinez Villergas 52 Madrid 28027 Spain	M Aranzazu Mendicoa Slot Manager	TTY:— Tel: +34 915 877 492 Fax:— E-mail: amendicoa@iberia.es
IBERIA Martinez Villergas 52 Madrid 28027 Spain	Maria Jose Nieto Schedule Assistant	TTY:— Tel: +34 915 877 503 Fax:— E-mail: mjnietom@iberia.es
IBERIA Velazquez 130 Madrid 28006 Spain	Ana Sanchez Slot Manager	TTY:— Tel: +34 987 78 82 Fax:— E-mail: asanchezdmar@ iberia.es
JAPAN AIRLINES INTERNATIONAL Shibaura Shimizu Bldg. 4-15-33 Shibaura Minato-ku Tokyo 108-0023 Japan	Yuji Matsuoka	TTY:— Tel: +81 (3) 5445-7125 Fax:— E-mail: yuji.matsuoka@ jalinfotec.co.jp
JAPAN AIRLINES INTERNATIONAL* 2-4-11 Higashi Shinagawa Shinagawa-ku Tokyo 140-8637 Japan	Satoshi Taniguchi System Engineer	TTY:— Tel: +81 (3) 5445 7123 Fax: +81 (3) 5445 7181 E-mail: satoshi.taniguchi@ jalinfotec.co.jp
JAPAN AIRLINES INTERNATIONAL* 4-11 Higashi Shinagawa 2-Chome Shinagawa-ku Tokyo 140-8637 Japan	Kana Tsurufuji Manager	TTY:— Tel: +81 (3) 5480 3897 Fax: +81 (3) 5460 5998 E-mail: kana.tsurufuji@jal.com

Postal address	Representative Name and Title	TTY Tel Fax E-mail
KLM ROYAL DUTCH AIRLINES* Amsterdamestraat 55 Amstelveen 1182GP Netherlands	Clim Van Der Weyden Schedule & Slot Manager	TTY:— Tel: +31 20 648 5372 Fax:— E-mail: clim-van-der.weyden@klm.com
KOREAN AIR LINES* 1370 Gonghang-dong Gangseo-gu, Soul-t'ukpyolsi Seoul 157-712 Korea	Minkyoung Eum Assistant Manager	TTY:— Tel: +82 (2) 2656-7489 Fax: +82 (2) 2656-8503 E-mail: mkeum@koreanair.com
LOT POLISH AIRLINES* 17 Stycznia Str. Warminsko-Mazurskie 00906 Warsaw Poland	Slwomir Rosinski Scheduling Manager	TTY: WAWSPLO Tel: +48 (22) 6068307 Fax: +48 (22) 6069815 E-mail: s.rosinski@lot.pl
Additional TTY and/or E-mail authorised to send SCRs: schedules@lot.pl		
SCANDINAVIAN AIRLINES SYSTEM (SAS)* Hedegaardsvej 88 2300 Copenhagen Denmark	Lilla Phillips Application Manager Schedule Display	TTY:— Tel: +45 3232 2556 Fax: +45 3232 4042 E-mail: Lilla.Phillips@sas.dk
SOUTH AFRICAN AIRWAYS Room 124, Block A Airways Park Jones Road or Tambo Int'l Airport 1627 South Africa	Muhammed Saleem Bhemat Specialist Scheduling and Distribution	TTY: JNBSPSA Tel: +27 (11) 978 1715 Fax: +27 (11) 978 1694 E-mail: saleembhemat@flysaa.com
SOUTH AFRICAN AIRWAYS* Room 121 Block A Airways Park Jones Road or Tambo Int'l Airport 1627 South Africa	Adre Venter Senior Manager - Scheduling and Distribution	TTY: JNBSPSA Tel: +27 (11) 978 1124 Fax: +27 (11) 978 1694 E-mail: adreventer@flysaa.com
Additional TTY and/or E-mail authorised to send SCRs: JNBRASA		

Postal address	Representative Name and Title	TTY Tel Fax E-mail
SOUTHWEST AIRLINES* 2702 Love Field Drive HDQ-1SP Dallas, TX 76051 United States	Bill Owen Lead Planner - Network Planning	TTY:— Tel: +1 (214) 792 4337 Fax:— E-mail: bill.owen@wnco.com
SWISS INTERNATIONAL AIR LINES* P.O. Box ZRHLX/DSIBM/LAKI Zurich CH-8058 Switzerland	Siguna Laakmann Business Analyst & IT Project Leader	TTY:— Tel: +41 (44) 5642213 Fax:— E-mail: Siguna.Laakmann@swiss.com
SWISS INTERNATIONAL AIRLINES LTD. P.O. Box ZRHLX/FIBM/GROT Zurich Airport Zurich 8058 Switzerland	Thomas Gross Senior Manager	TTY:— Tel: +41 (44) 564 21 40 Fax:— E-mail: grot@swiss.com
TAM LINHAS AEREAS* Av Jurandir 856 Hangar VII CEP 04072 000 Sao Paulo Brazil	Mauro Vieira Schedule Planning Analyst	TTY:— Tel: +55 (11) 5582 8042 Fax: +55 (11) 5582 9643 E-mail: mauro.vieira@tam.com.br
Additional TTY and/or E-mail authorised to send SCRs: SAOSPJJ		
TAROM Otopeni Airport Henri Coanda Departures Terminal 2nd Floor Calea Bucurestilor 224f Romania	Laura Nitu Network Planning Manager	TTY: BUHSPRO Tel: +40 (21) 2014728 Fax: +40 (21) 2014728 E-mail: laura.nitu@tarom.ro
TNT AIRWAYS S.A.* Liege Airport Building 101 Grace Hollogne B-4460 Belgium	Russell Joste Scheduling Manager	TTY: LGGSP3V Tel: +32 (4) 239 3511 Fax: +32 (4) 239 3549 E-mail: russell.joste@tnt.com
UNITED AIRLINES* 233 South Wacker Drive Chicago IL 60606 United States	Steve Brown Network Schedule Publication Mgr	TTY:— Tel: +1 (872) 825-6132 Fax:— E-mail: steve.brown02@united.com

Postal address	Representative Name and Title	TTY Tel Fax E-mail
US AIRWAYS* 111 West Rio Salado Parkwa Tempe Arizona 85281 CH- PLN United States	David Scott Director - Current Schedules	TTY:— Tel: +1 480-693-5853 Fax:— E-mail: dave.scott@ usairways.com

II. Non-Airline Observers

Postal address	Representative Name and Title	TTY Tel Fax E-mail
ACL - AIRPORT COORDINATION UNITED KINGDOM 120 Bath Road Hayes, Middlesex Harrow UB3 5PL United Kingdom	Tony Simons IS Manager	TTY: LONACXH Tel: +44 (20) 8564 0662 Fax: +44 (20) 8564 0691 E-mail: tony.simons@acl-uk.org
AIRPORT COORDINATION - AUSTRALIA P.O. Box 3047 Sydney International Airport New South Wales NSW 2020 Australia	Ernst J. Krolke Chief Executive Officer	TTY:— Tel: +61 (2) 9313 5469 Fax: +61 (2) 9313 4210 E-mail: ejkrolke@ coordaus.com.au
AIRPORT COORDINATION - AUSTRALIA P.O. Box 3047 Sydney International Airport NSW 2020 Australia	Petra Popovac Manager Coordination	TTY:— Tel: +61 (2) 9313 5469 Fax: +61 (2) 9313 4210 E-mail: petra@coordaus.com.au
Additional TTY and/or E-mail authorised to send SCRs: slots@coordaus.com.au		
AIRPORT COORDINATION - FRANCE ORLYTECH - Bat.527 Wissous Ile-de-France 91325 France	Stephen Wolage	TTY: HOQCOXH Tel: +33 (1) 49758811 Fax: +33 (1) 49758820 E-mail: s.wolage@cohor.org
AIRPORT COORDINATION - SPAIN, AENA Peonias, 12, 6th Floor 28042 Madrid Spain	Antonio Navarrete Head of Slot Coordination Department	TTY:— Tel: +34 (91) 3211499 Fax: +34 (91) 3211348 E-mail: anavarrete@aena.es
AIRPORT COORDINATION CANADA LTD. 210-5955 Airport Road Mississauga, Ontario L4V 1R9 Canada	Munro Smith President & Director Slot Coordination	TTY: YYZSCAC Tel: +1 (905) 673 6380 Fax: +1 (905) 672 9882 E-mail: MunroSmith@accl.aero
Additional TTY and/or E-mail authorised to send SCRs: cyyzslots@accl.aero		

Postal address	Representative Name and Title	TTY Tel Fax E-mail
AIRPORT COORDINATION NETHERLANDS Evert van de Beekstraat 23 Amsterdam 1118 CL The Netherlands	Richard Van Der Linden Slot Coordinator	TTY:— Tel: +31 (20) 4059734 Fax: +31 (20) 4059731 E-mail: vanderlinden@slotcoordination.nl
AMADEUS 485, Route du Pin Montard-Les Bouillides Sophia Antipolis - Cedex Provence-Alpes-Cote d'Azur 06902 France	Pascal Vitrolles	TTY:— Tel: +33 497-042-132 Fax:— E-mail: pascal.vitrolles@amadeus.com
AMADEUS SAS 485 Route du Pin Montard Les Bouillides - BP 69 06902 Sophia Antipolis France	Sylvain Rousselot Schedule Functional Analyst	TTY:— Tel: +33 (0) 497 21 57 09 Fax:— E-mail: sylvain.rousselot@amadeus.com
FHKD - AIRPORT COORDINATION GERMANY Terminal 2 (FAC II) Bereich E, HBK Nr. 37 Frankfurt, 60549 Germany	Michael Finger IT Manager	TTY:— Tel: +49 696 905 3081 Fax: +49 696 905 0811 E-mail: michael.finger@fhkd.org
INNOVATA 4908 Golden Pkwy Buford GA 30518 United States	Kelly Jenkins Senior Data Analyst	TTY:— Tel: +1 (770) 614-4900 ext.253 Fax:— E-mail: kjenkins@innovata-llc.com
ITA SOFTWARE INC. 621 E.Mill Valley Road Palatine, IL 60074 United States	Eric Atotubo Senior Pricing Analyst	TTY:— Tel: +1 (847) 991 0296 Fax: +1 (847) 991 0360 E-mail: erica@itasoftware.com
LUFTHANSA SYSTEMS AG Am Prime Parc 1 Raunheim 65479 Germany	Axel Floerke Product Architect	TTY:— Tel: +49 (69) 696 95580 Fax: +49 (69) 696 92062 E-mail: axel.floerke@lhsystems.com

Postal address	Representative Name and Title	TTY Tel Fax E-mail
NAVITAIRE, INC. 333 South Seventh Street Minneapolis MN 55402 United States	Robin Aborn Business Analyst - Product	TTY:— Tel: +01 612-317-7457 Fax:— E-mail: robin.aborn@ navitaire.com
SABRE 3150 Sabre Dr. Southlake, TX 76092 United States	Mary Leach Director - Product Development, Air Schedules, and Availability	TTY:— Tel: +1 (682) 605 2081 Fax: +1 (682) 605 8054 E-mail: Mary.Leach@sabre.com
SABRE AIRLINE SOLUTIONS 3150 Sabre Drive Southlake TX 76092 United States	Yusuf Mauladad Senior Principal	TTY:— Tel: +1 (682) 605 4394 Fax:— E-mail: yusuf.mauladad@ sabre.com
SABRE HOLDINGS 3150 Sabre Dr. Southlake, TX 76092 United States	Becky Gillispie System Owner	TTY:— Tel: +1 (682) 605 2077 Fax: +1 (682) 605 8050 E-mail: becky.gillispie@ sabre.com
SITA 3100 Cumberland Blvd. GA 30339 Atlanta United States	Clifford Neitsch Business Consultant	TTY:— Tel: +1 (770) 612-2331 Fax:— E-mail: cliff.neitsch@sita.aero
TRAVELPORT 300 Galleria Parkway NW Atlanta GA 30339-3196 United States	Brian Pavelka Product Manager - Schedules	TTY:— Tel: +1 (770) 563 5507 Fax:— E-mail: brian.pavelka@ travelport.com
UBM AVIATION - OAG 450 Capability Green Luton Bedfordshire LU1 3LU United Kingdom	Rothna Begum Database Manager	TTY:— Tel: +44 (1582) 695107 Fax:— E-mail: rothna.begum@ ubmaviation.com

Postal address	Representative Name and Title	TTY Tel Fax E-mail
UBM AVIATION - OAG 450 Capability Green Luton Bedfordshire LU1 3LU United Kingdom	Jacky Lee Head of Database Content	TTY: LTNABCR Tel: +44 (1582) 695224 Fax: +44 (1582) 1582 845613 E-mail: jacky.lee@ ubmaviation.com

ATTACHMENT 2
PARTICIPANTS IN IATA SLOT CONFERENCES

Attachment 2 contains a listing of Airlines, Coordinators and Facilitators and Non Airline main Contacts attending Slot Conferences. IATA members are marked with an asterisk. The list is divided into three sections:

I Airlines

II Airport Coordinators and Facilitators

III Non Airline Contacts

If you have any amendment to your contact details below, please send an e-mail to sked@iata.org.

I. Airlines

Postal address	Representative Name and Title	TTY Tel Fax E-mail
ADRIA AIRWAYS* The Airline of Slovenia Zg. Brnik 130h SI-4210 Brnik Slovenia	Luka Rojsek Head of Network & Sales Support	TTY:— Tel: +386 41981752 Fax: +386 12301325 E-mail: luka.rojsek@adria.si
Additional TTY and/or E-mail authorised to send SCRs: comm.plan@adria.si		
AEGEAN AIRLINES* 31 Viltanioti Str. GR - 14564 Kifissia Greece	Anastasios Raftopoulos Manager Network Planning	TTY: ATHSPA3 Tel: +30 (210) 626 1766 Fax: +30 (210) 626 1901 E-mail: raftota@aegeanair.com
Additional TTY and/or E-mail authorised to send SCRs: a3planning@aegeanair.com		
AER LINGUS* Head Office PA06-08 Dublin Airport Dublin Ireland	Finbar Whelan Manager Schedules Coordination	TTY: DUBSPEI Tel: +353 (1) 886 2057 Fax: +353 (1) 886 3887 E-mail: finbar.whelan@ aerlingus.com
Additional TTY and/or E-mail authorised to send SCRs: DUBOSEI		
AEROFLOT* 10 Arbat Street Moscow 119002 Russian Federation	Andrey Opolev Schedules Planning Manager	TTY: MOWSPSU Tel: +7 495 753 8626 Fax: +7 499 500 6950 E-mail: aaopolev@aeroflot.ru

Postal address	Representative Name and Title	TTY Tel Fax E-mail
AEROLINEAS ARGENTINAS*	Horacio Roberto Lazzaroni	TTY: BUESPAR
Rivadavia 578 - 5 piso	Director Planing	Tel: +54 (11) 4320 2488
C1002 AAQ, Buenos Aires		Fax: +54 (11) 4320 2217
Argentina		E-mail: hlazzaro@ aerolineas.com.ar
Additional TTY and/or E-mail authorised to send SCRs: iata_ar@aerolineas.com.ar		
AEROMEXICO*	Esperanza Monterde	TTY: MEXSPAM
Paseo de la Reforma	Long Term Planning	Tel: +52 (55) 9132-4215
5th Floor, Col. Cuauhtemoc	Schedule Director	Fax: +52 (55) 9132-4561
Mexico DF 06500		E-mail: emonterde@ aeromexico.com.mx
Mexico		
Additional TTY and/or E-mail authorised to send SCRs: MEXWRAM		
AEROSVIT AIRLINES*	Olena Maksymova	TTY: IEVCDVV
58A T. Shevchenko Bld	Head of Scheduling	Tel: +38 (044) 288 0070
01032 Kyiv		Fax: +38 (044) 288 0070
Ukraine		E-mail: maksimova@ aerosvit.com
AIGLE AZUR*	Remi Scotti	TTY: CDGPGZI
4 Avenue Marcel Paul	Schedule Planner	Tel: +33 (1) 41 51 00 36
93297 Tremblay en France		Fax: +33 (1) 41 51 00 10
Cedex		E-mail: r.scotti@aigle-azur.fr
France		
AIR ASIA BERHAD	Hazrul Masri	TTY:—
LCC Terminal, Jalan Klia S3	Senior Scheduler	Tel:—
Southern Support Zone		Fax:—
Kuala Lumpur International Airport		E-mail: hazrulmasri@ airasia.com
64000 Sepang, Selangor Darul Ehsan		
Malaysia		
AIR ASIA X	Venggatarao Niadu Suriethemmudu	TTY:—
LCC Terminal, Jalan KLIA S3	Schedule Planning Executive	Tel: +6 (03) 8660 4488
Southern Support Zone		Fax: +6 (03) 8660 4489
KLIA, 64000 Sepang		E-mail: venggataraoniadu@ airasia.com
Selangor		
Malaysia		
AIR ASTANA CJSC*	Rafael Taizhanov	TTY: ALASPKC
4A, Akhmetov Str.	Manager, Commercial Planning	Tel: +7 (727) 2584136 x1106
Air Astana Centre 1		Fax: +7 (727) 2598702
050039, Almaty		E-mail: rafael.taizhanov@ airastana.com
Kazakhstan		

Postal address	Representative Name and Title	TTY Tel Fax E-mail
AIR BALTIC* Riga International Airport Riga LV-1053 Latvia	Lilita Amolina Network Scheduling and Fleet Assignment Specialist	TTY: RIXSPBT Tel: +371 (67) 207211 Fax:— E-mail: laa@airbaltic.lv
AIR BERLIN* Air Berlin PLC & CO Luftverkehrs KG Saatwinkler Damm 42–43 13627 Berlin Germany	Dirk Helf Head of Scheduling Planning	TTY: TXLSPAB Tel: +49 (30) 3434 2902 Fax: +49 (30) 3434 2999 E-mail: dhelf@airberlin.com
Additional TTY and/or E-mail authorised to send SCRs: slotcoordination@airberlin.com		
AIR BOTSWANA* P.O. Box 92 Gaborone Botswana	Michael Mafoko Planning Analyst	TTY:— Tel: +267 71348569 Fax: +267 3974802 E-mail: MMAFOKO@ AirBotswana.co.bw
Additional TTY and/or E-mail authorised to send SCRs: mafoko@hotmail.com		
AIR CANADA* Centre Air Canada 1257 C.P. 14000 Saint-Laurent, Quebec H4Y 1H4 Canada	Volker Wackernagel Manager, Slots and Intermediate Scheduling	TTY: YULSPAC Tel: +1 (514) 422 6336 Fax: +1 (514) 422 5049 E-mail: volker.wackernagel@ aircanada.ca
Additional TTY and/or E-mail authorised to send SCRs: slots@aircanada.ca		
AIR CHINA* Beijing Capital Airport Air China Headquarter, West 4Fl, No. 30, Tianzhu Road, Tianzhu Airport Economist Dev. Beijing 101312 People's Republic of China	Lei Yin Deputy Senior Manager	TTY: PEKSPCA Tel: +86 (10) 6146 1690 Fax: +86 (10) 6146 2746 E-mail: yinlei@airchina.com
AIR CHINA CARGO* No. 29 Tianzhu Road Tianzhu Airport Shunyi District Beijing 101312 People's Republic of China	Shan Nan Schedule Request Manager	TTY:— Tel: +86 (10) 6146 5209 Fax: +86 (10) 6146 5275 E-mail: nanshan@ airchinacargo.com
Additional TTY and/or E-mail authorised to send SCRs: mktfrt@mail.airchina.com.cn		

Postal address	Representative Name and Title	TTY Tel Fax E-mail
AIR CONTRACTORS Air Contractors Ireland Ltd. No. 3 Malahide Road Swords, Co Dublin Ireland	Hugh O'Reilly Operations Control Manager	TTY:— Tel: +35 318121966 Fax: +35 318120966 E-mail: horeilly@ aircontractors.com
AIR CORSICA* Aeroport de Campo del Oro B. P. 505 20186 Ajaccio Cedex France	Marie-Antoinette Santoni Scheduling Manager	TTY:— Tel: +33 (4) 95 29 05 59 Fax: +33 (4) 95 29 07 45 E-mail: masantoni@ ccm-airlines.com
AIR DOLOMITI Via Paolo Bembo 70 37062 Dossobuono di Villafranca Verona Italy	Manuele Gazzardi Network Planning and Commercial	TTY:— Tel: +39 (045) 8605 208 Fax: +39 (045) 8605 349 E-mail: mgazzardi@airdolomiti.it
AIR EUROPA* Centro Empresarial Globalia P.O. Box 132 07620 Llucmajor, Mallorca Baleares Spain	Marta Birba Schedules Coordination Manager	TTY: PMICTUX Tel: +34 (971) 178 187 Fax: +34 (971) 187 141 E-mail: mbirba@air-europa.com
Additional TTY and/or E-mail authorised to send SCRs: pmictux@air-europa.com		
AIR FRANCE* 45 Rue de Paris PHSP F-95747 Roissy CDG Cedex France	Herve Mahieux Scheduling Manager	TTY:— Tel: +33 (1) 41 56 83 12 Fax: +33 (1) 41 56 83 69 E-mail: hemahieux@airfrance.fr
AIR INDIA* Schedules Section, Marketing Division Air India Bldg, 17th Floor Nariman Point, Mumbai 400 021 India	Ravindran Menon Deputy Manager Schedules	TTY: BOMSPAI Tel: +91 (22) 22796318 Fax: +91 (22) 22855001 E-mail: Ravi.Menon@airindia.in
AIR MACAU* 398 Alm Dr. Carols D'Assumpcao Edif. CNAC 13-18 Andar Macau	Mavis Chan GM-M NPD	TTY: MFMSPNX Tel: +853 (8) 396 6346 Fax: +853 (8) 396 6366 E-mail: mpmavisc@ airmacau.com.mo

Postal address	Representative Name and Title	TTY Tel Fax E-mail
AIR MADAGASCAR*	Rolland Etienne Albert Rakoto	TTY: TNRPHMD
31, Avenue de l'independence	Schedule Analyst Manager	Tel: +261 (20) 2251203
Antananarivo 101		Fax: +261 (20) 2233760
Madagascar		E-mail: rolland.rakoto@ airmadagascar.com
AIR MALTA*	Tonio Farrugia	TTY: MLASPKM
Air Malta PLC	Head of Network and	Tel: +356 229 99158
Air Malta Head Office	Commercial Partnerships	Fax: +356 794 88177
Vjal L-Avjazzjoni		E-mail: tonio-joseph.farrugia@ airmalta.com
LUQA		
Malta		
Additional TTY and/or E-mail authorised to send SCRs: schedules.airmalta@iarmalta.com		
AIR MAURITIUS LTD*	Aduth Ramdenee	TTY: MRUSPMK
New Termninal Building	Ground Services Manager	Tel: +230 603 3093
SSR International Airport		Fax: +230 202 3238
Plaine-Magnien		E-mail: aramdenee@ airmauritius.com
Mauritius		
AIR MEDITERRANEE	Alain Frebault	TTY:—
25 Rue du Luxembourg	Scheduling Manager	Tel: +33 (534) 482021
31410 Le Favga		Fax: +33 (534) 482020
France		E-mail: alain.frebault@ air-mediterranee.fr
AIR MOLDOVA*	Ruslana Mihailova	TTY:—
Head Office Air Moldova	Schedule Manager	Tel: +373 (22) 525162
Bvd. Dacia 80/2		Fax: +373 (22) 525162
Chisinau MD-2026		E-mail: rmihailova@ airmoldova.md
Republic of Moldova		
Additional TTY and/or E-mail authorised to send SCRs: info@airmoldova.md		
AIR NAMIBIA	Bluemy Hamutenya	TTY:—
P.O. Box 731	Manager: RM & Network	Tel: +264 (61) 299 6156
Banhof Street	Planning	Fax: +264 (61) 299 6178
Transnamib Building		E-mail: Bluemy.Hamutenya@ airnamibia.aero
Namibia		
AIR NEW ZEALAND*	Paul Murray	TTY: AKLSPNZ
Private Bag 92007	Manager Network Planning	Tel: +64 (9) 336 3328
185 Fanshawe Street	& Scheduling Longhaul	Fax: +64 (9) 336 3675
Auckland 1142		E-mail: paul.murray1@ airnz.co.nz
New Zealand		

Postal address	Representative Name and Title	TTY Tel Fax E-mail
AIR NIUGINI* Air Niugini LTD P.O. Box 7186 Boroko Papua New Guinea	Lohia Garo Planning Manager	TTY:— Tel: +675 327 3602 Fax: +675 327 3550 E-mail: lgaro@airniugini.com.pg
AIR NOSTRUM* Avda. Comarques del País Valencià,2 46930 Quart de Poblet Valencia Spain	Miguel A Oliver Martorell Network Planning and Scheduling Director	TTY: VLCSMYW Tel: +34 (96) 1960240 Fax: +34 (96) 1960237 E-mail: moliver@airnostrum.es
AIR PACIFIC LIMITED* Nasoso Road Nadi International Airport Fiji Islands Fiji	Robert Rounds Manager Schedules Planning	TTY: NANSPFJ Tel: +679 (67) 37403 Fax: +679 (67) 21990 E-mail: rrounds@ airpacific.com.fj
AIR TAHITI NUI* Rue Paul Gauguin B.P. 1673 98713 Papeete Tahiti French Polynesia	Christophe Le Gall Manager Schedules and Charters	TTY:— Tel: +689 460247 Fax:— E-mail: christophe.legall@ airtahitinui.pf
AIR TRANSAT* 5959 Blvd de la Cote-Vertu Montreal Quebec H4S 2E6 Canada	Martin Bourassa Supervisor Flight Scheduling	TTY:— Tel: +1 (514) 906 0330 ext 3094 Fax: +1 (514) 906 5128 E-mail: mbourassa@ airtransat.com
AIR VIA BULGARIAN AIRWAYS Business Centre of Transport 54 G. M. Dimitrov Blvd 1125 Sofia Bulgaria	Stoyan Loutchev Schedule Manager	TTY: SOFTOVL Tel: +359 (2) 971 2869/3625 Fax: +359 (2) 973 3454 E-mail: s_loutchev@air-via.com

Additional TTY and/or E-mail authorised to send SCRs: SOFOCVL, airvia@akvanet.com

AIRBRIDGE CARGO AIRLINES* 16/1, Malaya Pirogovskaya Str. 119435 Moscow Russian Federation	Alexander Roshchupkin Network Planning & Scheduling Manager	TTY:— Tel: +7 (495) 7862613 Fax: +7 (495) 7556581 E-mail: alex.roshchupkin@ airbridgecargo.com

Additional TTY and/or E-mail authorised to send SCRs: ops-abc@airbridgecargo.com

Postal address	Representative Name and Title	TTY Tel Fax E-mail
AIRDO Co. Ltd. Nishi 2-chome kita 1-jo Chuo-ku Sapporo Hokkaido 060-000 Japan	Yoshito Nakamoto Senior Staff, Corporate Planning Development	TTY:— Tel: +81 80-4373-2571 Fax: +81 11-252-5592 E-mail: y.nakamoto@airdo.co.jp
ALBA STAR S.A. Avenida Conde de Sallent 23 5th Floor 07003 Palma de Mallorca, Baleares Spain	Teresa Pujol Head Coordinator, Commercial Manager	TTY:— Tel: +34 (971) 575072 Fax: +34 (971) 728153 E-mail: teresa.pujol@albastar.es
ALITALIA* Piazza Almerico da Schio 3 00054 Aeroporto Leonardo da Vinci Fiumicino Rome Italy	Denise Scafidi Head of Slot Management	TTY: ROMEHAZ Tel: +39 (06) 6563 2493 Fax: +39 (06) 6563 2630 E-mail: scafidi.olimpia.denise@alitalia.it
Additional TTY and/or E-mail authorised to send SCRs: romehaz@alitalia.it		
ALL NIPPON AIRWAYS* Shiodome City Center 1-5-2 Higashi-Shimbashi Minato-ku Tokyo 105-7133 Japan	Takayuki Asai Deputy Director	TTY:— Tel: +81 (3) 67351374 Fax: +81 (3) 67351285 E-mail: t.asai@ana.co.jp
Additional TTY and/or E-mail authorised to send SCRs: regulations@ana.co.jp		
AMERICAN AIRLINES INC.* MD 5544 P.O. Box 619616 Dallas/Ft. Worth Int'l Airport Texas 75261-9616 United States	Jim Watt Manager Network Planning and IATA Slot Coordination	TTY: HDQSPAA Tel: +1 (817) 967 1233 Fax: +1 (817) 931 6670 E-mail: jim.watt@aa.com
ARKIA ISRAELI AIRLINES LTD.* Dov Airport P.O. Box 39301 Tel Aviv, 61392 Israel	Dan Grinberg Traffic and Flights Coordinator Mgr	TTY: TLVSBIZ Tel: +972 (3) 6902209 Fax: +972 (3) 6999397 E-mail: danig@arkia.co.il

Postal address	Representative Name and Title	TTY Tel Fax E-mail
ASTRAEUS LTD Astraeus House Faraday Court, Faraday Road Crawley, RH10 9PU United Kingdom	Matt Jenkins Commercial Manager	TTY:— Tel: +44 (1293) 819845 Fax: +44 (1293) 819832 E-mail: jenkins.matt@holidayscsa.cz
ATLANTIC AIRWAYS* Vagar Airport Fo-380 Sørvagur Faroe Islands	Paetur Rasmussen Charter Sales Manager	TTY:— Tel: +298 341000 Fax: +298 341001 E-mail: paetur@atlantic.fo
Additional TTY and/or E-mail authorised to send SCRs: charter@atlantic.fo		
ATLASJET AIRLINES INC.* Eski Halkali Yolu Yesilyurt Mah Alacati Evleri Yani No: 5/B 34153 Florya Istanbul Turkey	Esra Halvasi Commercial Director	TTY: ISTOWKK Tel: +90 (212) 663 2000 ext 125 Fax: +90 (212) 573 2640 E-mail: esra@atlasjet.com
Additional TTY and/or E-mail authorised to send SCRs: schedule@atlasjet.com		
AUSTRIAN* Office Park 2 P.O. Box 100 A-1300 Vienna-Airport Austria	Wolfgang Schweiger Teamleader Operative Network Planning	TTY: VIESPOS Tel: +43 5 1766 12470 Fax: +43 5 1766 512470 E-mail: wolfgang.schweiger@austrian.com
Additional TTY and/or E-mail authorised to send SCRs: VIESHOS, shortterm.scheduling@austrian.com		
AVIANCA (Aerovias Nacionales de Colombia S.A.)* Av. Calle 26 No. 59-15 Bogota Columbia	Ana Beatriz Guillen Scheduling and Payload Director	TTY:— Tel: +57 (1) 5877700 ext 2971 Fax: +57 (1) 5714235500 ext 2984 E-mail: beatriz.guillen@aviancataca.com
BA CITYFLYER Pioneer House Towers Business Park Wilmslow Road Didsbury M2O 2BA United Kingdom	Ian Cardy Network Planning	TTY:— Tel: +44 (161) 447 5435 Fax: +44 (161) 5482 E-mail: Ian.Cardy@ba.com
Additional TTY and/or E-mail authorised to send SCRs: bacityflyer.planning@ba.com		

Postal address	Representative Name and Title	TTY Tel Fax E-mail
BANGKOK AIRWAYS CO. LTD.* Bangkok Airways Co Ltd 99 Mu, 14 Vibhavadhi Rangsit Rd. Chom Phon, Chatuchak Bangkok 10900 Thailand	Phunlop Jaruphun Senior Traffic and Schedule Planning Manager	TTY: BKKYYPG Tel: +66 2265 2575 Fax: +66 2265 5727 E-mail: phunlop@bangkokair.com
BELAVIA* 14 Nemiga Str. Minsk 220004 Republic of Belarus	Alexandre Nikolaev Schedule Manager	TTY: MSQSPB2 Tel: +375 (17) 220 2090 Fax: +375 (17) 220 2383 E-mail: alexander.nikolaev@belavia.by
BELLE AIR* Bulevardi Zogu I Nr.1 Qendra Tregtare Tirana Tirana-Albania Albania	Gentjan Kole Flight Operations Post Holder	TTY:— Tel: +355 (0) 42381 992 Fax: +355 (0) 42381 992 E-mail: g.kole@flybelleair.com
Additional TTY and/or E-mail authorised to send SCRs: occ@flybelleair.com		
BIMAN BANGLADESH AIRLINES* Room 301, Admin Building (2nd Floor) Hazrat Shahjalal International Airport Kurmitola Dhaka 1229 Bangladesh	Md. Motahar Hossain General Manager Central Control	TTY: DACOCBG Tel: +880 (2) 89145481 Fax: +880 (2) 8916202 E-mail: gmcc@bdbiman.com
BINTER CANARIAS* C/Canon del Amsor, sn 35219 Telde Gran Canaria Spain	Jonay Lobo Torres Commercial Planning & Yield Manager	TTY:— Tel: +34 (928) 57 89 68 Fax: +34 (928) 57 96 03/04 E-mail: jlobo@bintercanarias.com
Additional TTY and/or E-mail authorised to send SCRs: desarrollorrhh@bintercanarias.es		
BLUE PANORAMA AIRLINES SpA* Viale delle Arti 123 Fiumicino 00054 Roma Italy	Papa Massimo Head of Scheduling	TTY:— Tel: +39 (06) 65508306 Fax: +39 (06) 65508777 E-mail: massimopapa@blue-panorama.com

Postal address	Representative Name and Title	TTY Tel Fax E-mail
BMI*	Simon Foster	TTY: EMACPBD
Donington Hall	Schedule Planning Manager	Tel: +44 (1332) 854214
Castle Donington		Fax: +44 (1332) 854155
Derby DE74 2SB		E-mail: simon.foster@
United Kingdom		flybmi.com

Additional TTY and/or E-mail authorised to send SCRs: EMAOWBD, EMARCBD, EMACSBD, ABZMRBD, ABZOOBD, Aberdeen.OpsController@flybmi.com

BMIBABY	Simon Moore	TTY:—
Tiny Town, Building 76	Network Planning Manager	Tel: +41 (1332) 854405
Beverly Road		Fax: +41 (1332) 854979
Castle Donington		E-mail: simon.moore@
Derby, DE74 2SA		bmibaby.com
United Kingdom		

Additional TTY and/or E-mail authorised to send SCRs: hdqnpww@bmibaby.com

BRITISH AIRWAYS*	Chris Carter	TTY: LHRBLBA
Slot Planning - Strategy &	Slot Planning Manager	Tel: +44 7789 612004
Business Units		Fax: +44 208 738 9955
Waterside (HFB2),		E-mail: chris.r.carter@ba.com
P.O. Box 365		
Harmondsworth		
UB7 0GB		
United Kingdom		

BRUSSELS AIRLINES*	Marilyn Lebegge	TTY: BRUSJSN
B House	Scheduling Manager	Tel: +32 (2) 7238137
Brussels Airport		Fax: +32 (2) 7238499
Airport Building 26 box 1.c.		E-mail: marilyn.lebegge@
Ringbaan,1831 Diegem		brusselsairlines.com
Belgium		

Additional TTY and/or E-mail authorised to send SCRs: scheduling@brusselsairlines.com

BULGARIA AIR	Mariya Nikolova Stoyanova	TTY: SOFSPFB
1 Brussels Blvd.	Manager Marketing & Sales	Tel: +359 (2) 9373261
Sofia Airport		Fax: +359 (2) 9373288
1540 Sofia		E-mail: schedule@air.bg
Bulgaria		

CARGOLUX AIRLINES*	Andre Hilker	TTY: LUXSOCV
Luxembourg Airport	Head of Network	Tel: +352 421 13102
L-2990 Luxembourg	Management	Fax: +352 421 13581
Luxembourg		E-mail: andre.hilker@
		cargolux.com

Additional TTY and/or E-mail authorised to send SCRs: networkmanagment@cargolux.com

Postal address	Representative Name and Title	TTY Tel Fax E-mail
CARIBBEAN AIRLINES* Caribbean Airlines Ltd Iere House Golden Grove Road Piarco Trinidad and Tobago	Arlene Birbal Schedule Planning Analyst	TTY:— Tel: +1 (868) 669 3000 ext. 2764 Fax: +1 (868) 669 0480 E-mail: arlene.birbal@caribbean-airlines.com
CATHAY PACIFIC AIRWAYS LTD* 9/F South Tower, Cathay Pacific City 8 Scenic Road Hong Kong International Airport, Lantau Hong Kong (SAR), China	Navin Chellaram General Manager Airline Planning	TTY: HKGVOCX Tel: +852 27474691 Fax: +852 21414691 E-mail: navin_chellaram@cathaypacific.com
CEBU PACIFIC AIR Airline Operations Center Domestic Airport Road Pasay City, 1301 Philippines	Ceres Noble Director (Flight Scheduling) Network Management	TTY:— Tel: +63 (2) 851 9187 Fax: +63 (2) 851 2871 E-mail: ceres.noble@cebupacificair.com
CENTRAL CHARTER AIRLINES Ostrara International Airport Mosnov 407 74251 Czech Republic	Ilona Osvaldova Ground Operations Manager	TTY:— Tel: +420 606677050 Fax: +420 226531035 E-mail: ilona.osvaldova@flycca.net
Additional TTY and/or E-mail authorised to send SCRs: coord@flycca.net		
CHINA CARGO AIRLINES LTD.* Marketing and Sales Department 2F China Cargo Airlines Center No. 189 Kanggang Road Hongqiao Int'l Airport Shanghai 200335 People's Republic of China	Haiyong Zhao General Manager Capacity Management Division	TTY:— Tel: +86 (21) 22365481 Fax: +86 (21) 22365485 E-mail: zhaohaiyong@ckair.com
CHINA EASTERN AIRLINES* No. 2550 Hongqiao International Airport Shanghai 200335 People's Republic of China	Shen Guobing Manager Airline Planning	TTY:— Tel: +86 (21) 22350064 Fax: +86 (21) 62683663 E-mail: chzsgb@ceair.com

Postal address	Representative Name and Title	TTY Tel Fax E-mail
CHINA SOUTHERN AIRLINES* N35 Feiyun East Street, Airport Road GuangZhou, GuangDong Province People's Republic of China	Fangyan Pan Slot Assistant	TTY:— Tel: +86 13825053139 Fax: +86 20 86120787 E-mail: panfangyan@csair.com
Additional TTY and/or E-mail authorised to send SCRs: schedule@csair.com		
CITYJET* Swords Buisness Campus Balheary Road Swords Co. Dublin Ireland	Laura Finegan Network Manager	TTY: DUBSPWX Tel: +353 (1) 870 0174 Fax: +353 (1) 870 0175 E-mail: laura.finegan@ cityjet.com
Additional TTY and/or E-mail authorised to send SCRs: info@cityjet.com		
CONDOR FLUGDIENST GMBH* FRA HX/F Thomas-Cook-Platz 1 61440 Oberursel Germany	Matthias Discher Head of Scheduling & Traffic Rights	TTY:— Tel: +49 (6171) 65 3181 Fax: +49 (6171) 65 2674 E-mail: Matthias.discher@ condor.com
Additional TTY and/or E-mail authorised to send SCRs: flugplanung@condor.com		
COPA AIRLINES Business Park, North Tower Costa Del Este, Panama Panama Republic of Panama	Eric Morales Network Planning Manager	TTY:— Tel: +507 304 2559 Fax: +507 2696 E-mail: ermorales@copaair.com
CORENDON AIRLINES Guzeloluk Mah 1879 sok. No. 148 Antalya Turkey	Mine Aslan Commercial Manager	TTY:— Tel: +90 (242) 324 6995 Fax: +90 (242) 324 3240 E-mail: maslan@ corendon-airlines.com
Additional TTY and/or E-mail authorised to send SCRs: commercial@corendon-airlines.com		
CORSAIR* 2 Avenue Charles Lindbergh F-94636 Rungis Cedex France	Laurence Vallas Schimpff Schedule Manager	TTY: ORYSLSS Tel: +33 (1) 49794922 Fax: +33 (1) 49794928 E-mail: l.vallas@corsairfly.com
Additional TTY and/or E-mail authorised to send SCRs: ORYSFSS		

Postal address	Representative Name and Title	TTY Tel Fax E-mail
CROATIA AIRLINES* Bani 75B Buzin 10000 Zagreb Croatia	Silvio Posavec Schedule Planning Manager	TTY: ZAGLROU Tel: +385 (1) 616 0023 Fax: +385 (1) 616 0152 E-mail: silvio.posavec@croatiaairlines.hr
Additional TTY and/or E-mail authorised to send SCRs: ZAGMCOU, sched@croatiaairlines.hr		
CUBANA DE AVIACION* Ave Van Troi Y Final Jose Marti Airport Terminal 1 Vice Presidencia Operaciones Ciudad Hibana, C19219 Cuba	David Rivera Sanchez Scheduling Planning Manager	TTY: HAVSPCU Tel: +537 (266) 4745 Fax: +537 (266) 4745 E-mail: david.rivera@ope.cubana.avianet.cu
Additional TTY and/or E-mail authorised to send SCRs: iti@ope.cubana.avianet.cu		
CYPRUS AIRWAYS LTD* 21 Alkeou Street Engomi 2404 Nicosia Cyprus	Errikos Kontos Head of Schedules Planning	TTY: NICSPCY Tel: +357 (22) 306130 Fax: +357 (22) 680827 E-mail: ekontos@cyprusair.com
Additional TTY and/or E-mail authorised to send SCRs: cyairways6@cytanet.com.cy		
CZECH AIRLINES* APC Building Ruzyne Airport 160 08 Prague 6 Czech Republic	Jan Cernik Schedule Planning & Slot Coordinator	TTY: PRGSPOK Tel: +420 (220) 220 115 359 Fax: +420 (220) 224 313 614 E-mail: jan.cernik@csa.cz
DELTA AIR LINES, INC.* Department 661 P.O. Box 20706 Atlanta, GA 30320 United States	Jennifer Sayre Director, International Schedules and Airport Access	TTY: ATLRTDL Tel: +1 612 578 4122 Fax: +1 404 715 6018 E-mail: jennifer.sayre@delta.com
Additional TTY and/or E-mail authorised to send SCRs: ATLRTDL@delta.com		
DEUTSCHE LUFTHANSA A.G.* Lufthansa Basis 60546 Frankfurt Germany	Stefan Klingelhoefer Director Regulatory Affairs & Strategy	TTY: FRAL2LH Tel: +49 (69) 696 58224 Fax: +49 (69) 696 92885 E-mail: stefan.klingelhoefer@dlh.de
Additional TTY and/or E-mail authorised to send SCRs: FRAZGLH, FRA3FLH, FRAL2LH, FRAOOLH, FRAL2LH@services.dlh.de		

Postal address	Representative Name and Title	TTY Tel Fax E-mail
EASYJET Hanger 89 London Luton Airport Luton Bedfordshire, LU2 9PF United Kingdom	Richard Matthews Slot & Schedule Manager	TTY: LTNOMCR Tel: +44 (1582) 52 52 68 Fax: +44 (1582) 44 33 55 E-mail: richard.matthews@ easyjet.com
EASYJET SWITZERLAND Route de l'Aeroport 5 CH-1215 Geneve15 Switzerland	Andreas Haerer Ground Operations Manager	TTY:— Tel: +41 (22) 717 8836 Fax: +41 (22) 788 2700 E-mail: andreas.haerer@ easyjet.com
EGYPTAIR* Egyptair Admin Complex South Building 3rd Floor, Finger No. 4 Cairo Airport Road Cairo Egypt	Tarek M. Diab Advisor - Network Planning Dept.	TTY: CATTMS Tel: +202 (26) 964354 Fax: +202 (26) 963109 E-mail: tarek_diab@ egyptair.com
Additional TTY and/or E-mail authorised to send SCRs: caittms@egyptair.com		
EL AL ISRAEL AIRLINES* P.O. Box 41 Ben Gurion Int'l, Airport Tel Aviv 70100 Israel	Micha Owsinski Seasonal Schedule Planning	TTY: TLVSPLY Tel: +972 (3) 971 6752 Fax: +972 (3) 971 6896 E-mail: michao@elal.co.il
EMIRATES* Planning and Research Department 9th Floor - EGHQ P.O. Box 686 Dubai United Arab Emirates	Murtuza Razvi Manager Schedule Planning	TTY: DXBSPEK Tel: +971 (4) 7083209 Fax: +971 (4) 2864048 E-mail: murtuzarazvi@ emirates.com
ESTONIAN AIR* 13 Lennujaama St. 11101 Tallinn Estonia	Priit Veiermann Director, International Relations	TTY: TLLSPOV Tel: +372 6401 222 Fax: +372 6016 092 E-mail: kristel.penu@ estonian-air.ee
Additional TTY and/or E-mail authorised to send SCRs: TLLFPOV, ov@estonian-air.ee		

Postal address	Representative Name and Title	TTY Tel Fax E-mail
ETHIOPIAN AIRLINES* P.O. Box 1755 Addis Ababa Ethiopia	Ermias Kebede Likassa Manager PAX Schedules	TTY: ADDSPET Tel: +251 (011) 5174420 Fax: +251 (011) 6611474 E-mail: Ermiask@ethiopianairlines.com
ETIHAD AIRWAYS* P.O. Box 35566 New Airport Road Abu Dhabi United Arab Emirates	Maria Giretto Manager Schedules Planning	TTY: AUHSPEY Tel: +971 (2) 511 1322 Fax: +971 (2) 511 1397 E-mail: mgiretto@etihad.ae
EUROPE AIRPOST 22 Avenue des Nations BP 49015 Villepinte 95911 Roissy CDG Cedex France	Marie Dall Olmo Sales Administration & Program Manager	TTY:— Tel: +33 (148) 17 75 78 Fax: +33 (148) 17 75 45 E-mail: mdallolmo@europeairpost.fr
EUROPEAN AIR TRANSPORT LEIPZIG GmbH* Frankfurter SH2 04435 Schkeuditz Germany	Peter Hickisch Scheduling and Slots Manager	TTY:— Tel: +49 (341) 14499-5034 Fax:— E-mail: peter.hickisch@dhl.com
EUROWINGS GMBH* Großenbaumer Weg 6 D-40472 Düsseldorf Germany	Thomas Storck Vice President Network Planning	TTY: DUSSPEW Tel: +49 (231) 9245 7355 Fax: +49 (231) 9245 7375 E-mail: thomas.storck@eurowings.com
EVA AIRWAYS* 15 F, 376 Hsin-Nan Rd. Sec 1 Luchu, Taoyuan Hsien 338 Taiwan Chinese Chinese Taipei	Wendy Lin Deputy Junior Vice President	TTY:— Tel: +886 (3) 351 6219 Fax: +886 (3) 351 0034 E-mail: wendylin@evaair.com
FARNAIR Zone Nord 4030 Basel Airport Switzerland	Bez Raphaele Operations Assistant	TTY:— Tel: +41 (61) 560 3434 Fax: +41 (61) 560 3430 E-mail: ops@farnair.com

Postal address	Representative Name and Title	TTY Tel Fax E-mail
FEDEX EXPRESS* 3680 Hacks Cross Road Building H, First Floor Memphis Tennessee 38125 United States	David Branch Global Linehaul Specialist	TTY: MEMASFX Tel: +1 (901) 434 8668 Fax: +1 (901) 434 9426 E-mail: dbbranch@fedex.com
Additional TTY and/or E-mail authorised to send SCRs: TYOTHFX		
FINNAIR OYJ* Lentajantie 1B 01053 Finnair Finland	Katriina Ahlroth Scheduler	TTY: HELNLAY Tel: +358 503931620 Fax: +358 98188208 E-mail: katriina.ahlroth@ finnair.com
FLYBE* Jack Walker House Exeter International Airport Exeter Devon EX5 2HL United Kingdom	Steve Lilley Head of Commercial Planning	TTY: EXTFPBE Tel: +44 (1392) 266712 Fax: +44 (1392) 266772 E-mail: steve.lilley@flybe.com
FLYDUBAI Flydubai HQ, near Gate 3, Terminal 2 Dubai Airport P.O. Box 353, Dubai United Arab Emirates	Arjun Singh Manager Network Planning & Scheduling	TTY: DXBSPFZ Tel: +971 50 7485116 Fax: +971 4 220 0032 E-mail: arjun.singh@ flydubai.com
Additional TTY and/or E-mail authorised to send SCRs: regulatory@flydubai.com		
FLYFIREFLY SDN BHD 3rd Floor, Administration Building 1, MAS Complex A, Sultan Abdul Aziz Shah Airport, 47200 Subang, Selangor Darul Ehsan, Malaysia	Caroline Tang Snr Executive , Schedule Development	TTY:— Tel: +603 7840 3781 Fax: +603 7846 6461 E-mail: caroline@ malaysiaairlines.com
FREEBIRD AIRLINES* Yesilkoy Cad No. 9 A Blok Daire 2-4 34153 Florya Istanbul Turkey	Murat Senturk OCC Manager	TTY: ISTFBFH Tel: +90 (212) 663 7777 ext 132 Fax: +90 (212) 663 2353 E-mail: murat@ freebirdairlines.com
Additional TTY and/or E-mail authorised to send SCRs: info@freebirdairlines.com		

Postal address	Representative Name and Title	TTY Tel Fax E-mail
GARUDA INDONESIA*	Esty Widyawati	TTY: JKTSPGA
1st Floor, Management Building Garuda City Soekarno Hatta Intl Airport Cengkareng, 19120 Indonesia	Senior Manager	Tel: +62 (21) 2560 1122 Fax: +62 (21) 2560 1130 E-mail: esty.widyawati@garuda-indonesia.com
Additional TTY and/or E-mail authorised to send SCRs: slotcoord.id@garuda-indonesia.com		
GERMAN SKY AIRLINES GMBH	Radu Marius Safta	TTY: DUSGHXH
Lierenfelder Straße 45 40231 Dusseldorf Germany	Commercial Manager	Tel: +49 (211) 699318441 Fax: +49 (211) 699318448 E-mail: Radu.Safta@germanskyairlines.com
GERMANIA	Bodo Kruse	TTY: TXLSPST
Riedemannweg 58 13627 Berlin Germany	Sales Assistant	Tel: +49 (30) 522808 362 Fax: +49 (30) 522808 361 E-mail: sales@germania.aero
Additional TTY and/or E-mail authorised to send SCRs: TXLOWST		
GERMANWINGS GMBH	Kerstin Klawonn	TTY: CGNSP4U
Germanwings Strasse 2 51147 Cologne Germany	Senior Manager Network Planning	Tel: +49 (2203) 1027 408 Fax: +49 (2203) 1027 227 E-mail: kerstin.klawonn@germanwings.com
GOL/VARIG - VRG LINHAS AÉREAS SA*	Claudio Neves Borges	TTY:—
Praca Comandante Linneu Gomes S/N Portaria 3, 04626-020 Jardim Aeroporto Sao Paulo Brazil	Schedule and Route Manager	Tel: +55 (11) 2128 4164 Fax: +55 (11) 2128 2646 E-mail: CNBorges@golnaweb.com.br
GULF AIR*	Dilhan Haradasa	TTY: BAHSPGF
P.O. Box 138 Manama Bahrain	Senior Manager Scheduling	Tel: +97 (33) 8324792 Fax:— E-mail: Dilhan.Haradasa@gulfair.com
HAHN AIR*	Daniel Rudas	TTY:—
An Der Trift 65 D-63303 Dreieich Germany	Executive V.O. & COO	Tel: +49 (6103) 50130 Fax: +49 (6103) 5013129 E-mail: d.rudas@hahnair.com
Additional TTY and/or E-mail authorised to send SCRs: frankfurt@hahnair.com		

Postal address	Representative Name and Title	TTY Tel Fax E-mail
HAWAIIAN AIRLINES*	Robert Lamansky	TTY:—
P.O. Box 30008	Director Schedule Planning	Tel: +1 (808) 838 6081
Honolulu		Fax: +1 (808) 838 6792
HI 96820 0008		E-mail: robert.lamansky@
Hawaii		hawaiianair.com
HELLO AG	Sebastien Heckerl	TTY: BSLOOXH
P.O. Box 554	Scheduling Coordinator	Tel: +47 (61) 327 2956
CH-4050 Basel Flughafen		Fax: +47 (61) 327 2965
Switzerland		E-mail: hes@hello.ch
Additional TTY and/or E-mail authorised to send SCRs: ops-control@hello.ch		
HHA HAMBURG AIRWAYS, LUFTVERKEHRSGESELL-SCHAFT mbH	Daniel Titze	TTY:—
ParadiesstraBe 206b	Scheduling Manager	Tel: +49 (30) 319 88 19 15
D-12526		Fax: +49 (30) 319 88 19 20
Berlin		E-mail: D.Titze@
Germany		Hamburgairways.com
Additional TTY and/or E-mail authorised to send SCRs: sales@Hamburgairways.com		
HOLIDAYS CZECH AIRLINES A.S.	Miroslava Kadlcikova	TTY: PRGOCOK
Jana Kaspara 1069/1	Flight Support Coordinator	Tel: +420 (220) 113308
160 08 Prague 6		Fax: +420 (220) 560574
Czech Republic		E-mail: kadlcikova.miroslava@
		holidayscsa.cz
HONG KONG AIRLINES*	Wai Ki Chong	TTY: HKGVPUO
7th Floor	General Manager, Airline	Tel: +852 (315) 14659
One Citygate, 20 Tat Tung	Planning	Fax: +852 (315) 11838
Road		E-mail: Ricky.chong@
Tung Chung, Lantau		hkairlines.com
Hong Kong (SAR), China		
HONG KONG EXPRESS*	William Chan	TTY: HKGVPUO
7th Floor	Deputy General Manager,	Tel: +852 (315) 11826
One Citygate, 20 Tat Tung	Distribution & Planning	Fax: +852 (315) 11801
Road		E-mail: william.chan@
Tung Chung Lantan		hongkongexpress.com
Hong Kong (SAR), China		
IBERIA*	Arantza Mendicoa Guillen	TTY: MADSPIB
Martinez Villergas 52	Slots & Schedule Planning	Tel: +34 (91) 587 7492
4th Floor	Manager	Fax: +34 (91) 587 7444
28027 Madrid		E-mail: amendicoa@iberia.es
Spain		
Additional TTY and/or E-mail authorised to send SCRs: MADWZIB		

Postal address	Representative Name and Title	TTY Tel Fax E-mail
IBERWORLD AIRLINES S.A. 07121, Palma de Mallorca Baleares Spain	Catalina Servera Sagredo Traffic Rights & Scheduling Manager	TTY: PMISPIP Tel: +34 (971) 070476 Fax: +34 (971) 076158 E-mail: catalina.servera@orbest.com
Additional TTY and/or E-mail authorised to send SCRs: PMICCTY		
ICELANDAIR* Icelandair Head Office Reykjavik Airport 101 Reykjavik Iceland	Hannes Arnason Manager Scheduling	TTY: REKSPFI Tel: +354 354 5050 349 Fax: +354 354 5050 766 E-mail: hannesA@icelandair.is
Additional TTY and/or E-mail authorised to send SCRs: scheduling@icelandair.is		
INTERGLOBE AVIATION LIMITED - INDIGO Level 3 Tower C Global Business Park M.G. Road Gurgaon 122002 Haryana India	Rajat Kumar Director - Airport Support & Scheduling	TTY:— Tel: +91 (124) 435 2500 Extn 2783 Fax: +91 (124) 4068536 E-mail: rajat.kumar@goindigo.in
ISRAIR AIRLINES* Ben Gurion Airport P.O. Box 239 Tel Aviv 70100 Israel	Maya Bauer Planning and Scheduling Manager	TTY: TLVSH6H Tel: +972 (3) 9751444/27 Fax: +972 (3) 9751402 E-mail: mayab@israir.co.il
JADE CARGO INTERNATIONAL CO. LTD. Airport Information Center Shenzhen Bao'an Int'l Airport Guangdong Province People's Republic of China Postal Code 518128 People's Republic of China	Hakan Bulat Manager Network Planning	TTY: SZXGNJI Tel: +86 (755) 6188 6288 ext 6540 Fax: +86 (755) 2345 3271 E-mail: hakan.bulat@jadecargo.com
Additional TTY and/or E-mail authorised to send SCRs: slots@jadecargo.com		
JAPAN AIRLINES Co. Ltd* Japan Airlines International 2-4-11 Higashi - Shinagawa Shinagawa-ku Tokyo 140-8637 Japan	Shigeyuki Kamei Vice President, International Affairs and Alliances	TTY:— Tel: +81 (3) 5460 3731 Fax: +81 (3) 5460 5906 E-mail: shigeyuki.kamei@jal.com

Postal address	Representative Name and Title	TTY Tel Fax E-mail
JAT AIRWAYS* Bulevar Umetnosti, 16A 11070 Belgrad Serbia	Djordje Najdanovic Head Planning & Scheduling	TTY: BEGSHJU Tel: +381 (11) 2098488 67 Fax: +381 (11) 2098488 E-mail: najdanovicd@jat.com
Additional TTY and/or E-mail authorised to send SCRs: cp_scheduling@jat.com		
JET AIRWAYS (INDIA) LTD.* Siroya Centre Sahar Airport Road Andheri-East Mumbai - 400 099 India	Anthony D'Sa Senior General Manager - Planning	TTY:— Tel: +91 (022) 2832 7356 Fax: +91 (022) 6121 1680 E-mail: adesa@jetairways.com
JET LITE (INDIA) LTD* Siroya Center Andheri-Sahar Airport Road, Andheri East Mumbai - 400 099 India	Anthony D'Sa Senior General Manager - Planning	TTY:— Tel: +91 (22) 2832 7356 Fax: +91 (22) 6121 1680 E-mail: adesa@jetairways.com
JET TIME A.S. Skojtevej 27-31 DK - 2770 Kastrup Denmark	Ole Bruun Horup Traffic Planning Manager	TTY:— Tel: +45 (32) 46 7300 Fax: +45 (32) 46 7301 E-mail: oh@jet-time.dk
Additional TTY and/or E-mail authorised to send SCRs: info@jet-time.dk		
JET2.COM LTD. Jet2.com Ltd Low Fare Finder House Leeds Bradford Airport LS19 7TU United Kingdom	Chris Springer Fleet Planning Manager	TTY: LBASPLS Tel: +44 (113) 2397654 Fax: +44 (113) 2387455 E-mail: cspringer@jet2.com
Additional TTY and/or E-mail authorised to send SCRs: planning@jet2.com		
JETAIRFLY Gistelsesteenweg 1 8400 Oostende Lijnbaanstraat 3 8400 Oostende Belgium	Rita Ghys Head Delegate	TTY: BRUSPTB Tel: +32 (59) 565662 Fax: +32 (59) 566029 E-mail: rita_ghys@jetair.be
JeTRAN AIR 40-44 Church Street Reigate Surrey, RH2 OAJ United Kingdom	Scott Collier Sales	TTY:— Tel: +44 (1737) 232239 Fax:— E-mail: acmi@jetranair.com

Postal address	Representative Name and Title	TTY Tel Fax E-mail
JIN AIR 3F, 453 Gonghang-daero Gangseo-gu Seoul Republic of Korea	Jun Ho Lee Assistant Manager	TTY:— Tel: +2 36605872 Fax: +2 36605999 E-mail: junhlee@jinair.com
JUNEYAO AIRLINES CO., LTD* No. 283 Vinghin 3 Road Hengqiao International Airport Shanghai 200335 People's Republic of China	Xiaohui Zhang Head Coordinator	TTY:— Tel: +86 (21) 22356608 Fax: +86 (21) 22356180 E-mail: zhangxiaohui@juneyao.com
KENYA AIRWAYS* P.O. Box 19002 Nairobi 00501 Kenya	James Kibati Head of Network Planning and Strategy	TTY:— Tel: +254 (20) 6422656 Fax:— E-mail: jimmy.kibati@kenya-airways.com
Additional TTY and/or E-mail authorised to send SCRs: schedules@kenya-airways.com		
KINGFISHER AIRLINES* Kingfisher House Western Express Highway Near the Domestic Airport, Vile Parle East Mumbai, 400099 India	Elsa-Marie D'Silva Vice President - Network Planning	TTY:— Tel: +91 9867644975 Fax: +91 26156970 E-mail: elsa.dsilva@flykingfisher.com
KLM - ROYAL DUTCH AIRLINES* Network Schedule and Capacity Planning P.O. Box 7700 1117 ZL Schiphol Netherlands	George Voorman Manager Schedule, Slot and Planning Europa	TTY: HDQLRKL Tel: +31 (20) 64 82548 Fax: +31 (20) 64 88082 E-mail: george.voorman@klm.com
Additional TTY and/or E-mail authorised to send SCRs: HDQLRKL@EWMS.KLM.COM		
KORAL BLUE AIRLINES Zone Touristique Dkhila 5065 Monastir Tunisia	Nizar Lajimi Schedules and Planning Manager	TTY:— Tel: +216 (73) 520600 Fax: +216 (73) 520666 E-mail: programmation@nouvelair.com.tn

Postal address	Representative Name and Title	TTY Tel Fax E-mail
KOREAN AIR*	Young Do Jeon	TTY: SELSPKE
Gong-Hang Dong	General Manager	Tel: +82 (2) 2656-7487
Gangseo-gu		Fax: +82 (2) 2656-7715
157-712		E-mail: ydjeon@koreanair.com
Seoul		
Republic of Korea		
KUWAIT AIRWAYS*	Khalid Al-Ajmi	TTY: KWISPKU
Kuwait Airways CA/SP	Senior Expert Schedules	Tel: +965 24717773
P.O. Box 394 Safat	Planning	Fax: +965 2472 7558
Safat 13004		E-mail: ajmi@
Kuwait		kuwaitairways.com
Additional TTY and/or E-mail authorised to send SCRs: kwispku@kuwaitairways.com		
LOT - POLISH AIRLINES*	Slawomir Rosinski	TTY: WAWSPLO
39, 17 Stycznia Str.	Scheduling Manager	Tel: +48 (22) 606 8307
Warsaw 00-906		Fax: +48 (22) 606 9815
Poland		E-mail: s.rosinski@lot.pl
Additional TTY and/or E-mail authorised to send SCRs: schedules@lot.pl		
LUXAIR*	Pascal Reiland	TTY: LUXSPLG
Network Management	Manager Schedule Planning	Tel: +352 2456 4225
Luxembourg Airport		Fax: +352 2456 4755
L-2987 Luxembourg		E-mail: pascal.reiland@
Luxembourg		luxairgroup.lu
Additional TTY and/or E-mail authorised to send SCRs: LUXOFLG, schedule.planning@luxairgroup.lu		
MAHAN AIRLINES*	Mahisa Ataei Aghdam	TTY:—
Mahan Air Tower, Azadegan St.	Planning Manager	Tel: +98 (21) 48381901-5
Karaj HighwayTehran		Fax: +98 (21) 48381925
1481655761		E-mail: mahisa.ataei@
Iran		mahan.aero
MALMO AVIATION*	Jeanette Andersson	TTY:—
Jagershillgatan 18	Schedule Manager	Tel: +46 (40) 660 2900
SE - 20120 Malmo		Fax: +46 (40) 660 2938
Sweden		E-mail: jeanette.andersson@
		malmoaviation.se
MARTINAIR HOLLAND N.V.*	Paul Baars	TTY:—
Piet Guilonardwbg 17	Director Planning and	Tel: +31 20 60 11643
1118 ZG Schiphol Airport	Scheduling	Fax: +31 6 53597740
Amsterdam		E-mail: paul.baars@
Netherlands		nl.martinair.com
Additional TTY and/or E-mail authorised to send SCRs: SPL.SLOTS@NL.MARTINAIR.COM		

Postal address	Representative Name and Title	TTY Tel Fax E-mail
MERIDIANA FLY S.p.A.* Meridiana Fly S.p.A. Aeroporto Olbia Costa Smeralda 07026 Olbia, OT Italy	Luigi Vallero Fleet,Network Planning&Alliances Manager	TTY: OLBSPIG Tel: +39 (0789) 52834 Fax: +39 (0789) 52834 E-mail: luigi.vallero@meridianafly.com
MIAT MONGOLIAN AIRLINES* Buyant - Ukhaa 45 Khan-Vul District Ulaanbaatar Mongolia	Mendsaikhan Tudev Director, Marketing & Sales Dept	TTY: ULNDDOM Tel: +976 (11) 284100 Fax: +976 (11) 379919 E-mail: mendsaikhan@miat.com
Additional TTY and/or E-mail authorised to send SCRs: marketing@miat.com		
MIDDLE EAST AIRLINES* MEA Building Airport road P.O. Box 11-206 Beirut Lebanon	Bechara Antonios Head of Scheduling & Charters	TTY: BEYSPME Tel: +961 (1) 622 009 Fax: +961 (1) 629 260 E-mail: antoniosb@mea.com.lb
MNG AIRLINES Ataturk Havalimani B Kapisi Teknik Hangar Yani MNG Binasi 34149 Yesilkoy, Istanbul Turkey	Atilla Arikan Scheduling and Planning Manager	TTY: ISTMBXH Tel: +90 (212) 465 4413 Fax: +90 (212) 465 4496 E-mail: atilla.arikan@mngairlines.com
Additional TTY and/or E-mail authorised to send SCRs: scheduling@mngairlines.com		
MONARCH AIRLINES London Luton Airport Luton LU2 9NU United Kingdom	Christopher Marks Commercial Planning Manager	TTY: LTNCMZB Tel: +44 (1582) 398018 Fax: +44 (1582) 411000 E-mail: chris.marks@monarch.co.uk
Additional TTY and/or E-mail authorised to send SCRs: LTNSPZB, SLOT.COORDINATION@monarch.com		
NEOS SpA Via Della Chiesa 68 21019 Somma Lombardo (VA) Italy	Raffaella Faccin Scheduling Department	TTY:— Tel: ++39 (0331) 232831 Fax: ++39 (0331) 230320 E-mail: Raffaella.faccin@neosair.it

Postal address	Representative Name and Title	TTY Tel Fax E-mail
NEPAL AIRLINES CORPORATION NAC Building Kanti Path P.O. Box 401 Kathmandu Nepal	Tanka Nidhi Dahal Incharge Schedule	TTY: KTMMDRA Tel: +977 (1) 4220757 ext 2139 Fax: +977 (1) 4225348 E-mail: tankadahal.np@gmail.com
Additional TTY and/or E-mail authorised to send SCRs: schedule@nac.co.np		
NEW LIVINGSTON Via Giovanni XX111, 206 21010 Cardano al Campo Varese Italy	Monica Reggiani Commercial Planning	TTY: MILCSL4 Tel: +390 (331) 267353 Fax: +390 (331) 267424 E-mail: monica.reggiani@livingstonair.it
Additional TTY and/or E-mail authorised to send SCRs: MILSPL4		
NIKI LUFTFAHRT GmbH* Office Park I, Top B03 1300 Wien Flughafen Austria	Rene Pinter Manager Route Planning	TTY:— Tel: +43 (1) 70126 748 Fax: +43 (1) 70126 480 E-mail: rene.pinter@flyniki.com
NIPPON CARGO AIRLINES* Narita Int'l Airport Narita Chiba 282-0021 Japan	Hideyuki Koda Senior Management	TTY:— Tel: +81 (476) 33 8680 Fax: +81 (476) 33 8320 E-mail: hideyuki.koda@nca.aero
NORWEGIAN AIR SHUTTLE ASA Oksenoyveien 3 P.O. Box 115 N-1330 Fornebu Norway	Richard A. Deryckere Manager Network Relations and Coordination	TTY: OSLSPDY Tel: +47 48997593 Fax: +47 67593150 E-mail: rad@norwegian.no
NOUVELAIR TUNISIE* Zone Touristique Dkhila 5065 Monastir Tunisia	Nizar Lajimi Schedules and Planning Manager	TTY:— Tel: +216 (73) 520600 Fax: +216 (73) 520666 E-mail: programmation@nouvelair.com.tn
OLYMPIC AIR* 1st Km Koropiou - Varis Ave and 1 Ifestou Str. 19400 Koropi Greece	Filippos Doukas Network Planning Manager	TTY:— Tel: +30 (210) 3550528 Fax: +30 (210) 3550431 E-mail: f.doukas@olympicair.com
Additional TTY and/or E-mail authorised to send SCRs: scheduling@olympic-airways.gr		

Postal address	Representative Name and Title	TTY Tel Fax E-mail
OMAN AIR* Oman Air Post Box #58 Muscat Intnl Airport Muscat OMAN	Markku Nokkala Chief Network & Planning Officer	TTY: mCTSPWY Tel: +968 24518323 Fax: +968 24521073 E-mail: Markku.Nokkala@omanair.com
OPENSKIES 5 allée du Commandant Mouchotte 91781 Wissous Cedex France	Stephane Sie Schedule Manager	TTY:— Tel: +33 684.63.84.08 Fax: +33 174.22.42.20 E-mail: stephane.sie@flyopenskies.com
PAKISTAN INTERNATIONAL AIRLINES* Room 114, CRC Building, PIA Head Office Karachi Airport Pakistan	Anjum Amin Mirza General Manager Schedules & Network Planning	TTY: KHISPPK Tel: +92 (21) 9044855 Fax: +92 (21) 9044784 E-mail: khisppk@piac.aero
PEACH AVIATION LTD 5F, Construction Office 1 Senshu Kuko Kita, Izumisano-city Osaka 549-8585 Japan	Isao Ono Head of Network Planning, Pricing and Revenue Management	TTY:— Tel: +81 (50) 37766750 Fax:— E-mail: i.ono@flypeach.com
Additional TTY and/or E-mail authorised to send SCRs: schedule@flypeach.com		
PEGASUS AIRLINES* Basin Expres Yolu No:2 Halkali Istanbl 34660 Turkey	Turgut Atay Scheduling Manager	TTY: LTBAPGTX Tel: +90 (212) 692 77 69 Fax: +90 (212) 470 1000 E-mail: turgut.atay@flypgs.com
PHILIPPINE AIRLINES* 5/F PNB Financial Center Macapagal Ave, Pasay City Philippines	Milagros L. Abarro Senior Assistant Vice President - Planning	TTY:— Tel: +632 5562 801 Fax: +632 5562 177 E-mail: mila_abarro@pal.com.ph
Additional TTY and/or E-mail authorised to send SCRs: gemma_mangabat@pal.com.ph		

Postal address	Representative Name and Title	TTY Tel Fax E-mail
POLAR AIR CARGO INC. 2000, Westchester Ave. Purchase, NY 10577 United States	Lars Winkelbauer VP, Marketing, Revenue Management & Network Planning	TTY:— Tel: ++1 (914) 701 8990 Fax: ++1 (914) 701 8770 E-mail: lars.winkelbauer@polaraircargo.com
PORTER AIRLINES Billy Bishop Toronto City Airport Toronto, Ontario M5V 1A2 Canada	Andrew Pierce Director, Commercial Planning	TTY: ANPOCPD Tel: +1 (416) 6198555 Fax: +1 (416) 2034136 E-mail: andrew.pierce@flyporter.com
PRIMERA AIR SCANDINAVIA A/S Hlidasmari 12 201 Kopavogur Iceland	Hrannar Ingimarsson Fleet Planner	TTY: REKOWPF Tel: +45 527 6125 Fax: +45 527 6001 E-mail: hrannar@primeraair.com
Additional TTY and/or E-mail authorised to send SCRs: fleetplanning@primesaair.com		
PT. LION MENTARI AIRLINES Lion Air Tower 6th Floor J.L Gajah Mada No. 7 Jakarta Pusat 10130 Indonesia	Saleh Alatas Chief Operation Planning	TTY:— Tel: +62 81310111737 Fax: +62 216326021 E-mail: saleh.alatas@lionair.co.id
Additional TTY and/or E-mail authorised to send SCRs: osp@lionair.co.id		
QANTAS AIRWAYS LTD* QCA/7 203 Coward Street Mascot NSW 2020 Australia	Paul Petrykowycz Manager International Schedule Development	TTY: SYDQPQF Tel: +61 (2) 96914483 Fax: +61 (2) 9691 5858 E-mail: ppetrykowycz@qantas.com.au
Additional TTY and/or E-mail authorised to send SCRs: schedule@qantas.com.au		
QATAR AIRWAYS* Qatar Airways Tower P. O. Box 22550 Doha Qatar	Joachim Lobo Senior Manager Scheduling	TTY: DOHSPQR Tel: +974 449 6260 Fax: +974 462 6440 E-mail: jlobo@qatarairways.com.qa
Additional TTY and/or E-mail authorised to send SCRs: qrschdplng@qatarairways.com.qa		

Postal address	Representative Name and Title	TTY Tel Fax E-mail
REGIONAL, COMPAGNIE AERIENNE EUROPENNE Aeroport Nantes Atlantique 44340 Bouguenais France	Sophie Clemence Network Planning Manager	TTY: NTESPYS Tel: +33 (2) 40 13 52 18 Fax: +33 (2) 40 13 53 13 E-mail: sclemence@ regional.com
Additional TTY and/or E-mail authorised to send SCRs: progdeveco@regional.com		
ROSSIYA AIRLINES OJSC* 18/4, Str. Pilotov St. Petersburg 196210 Russian Federation	Evgenia Bobrysheva Schedule Manager	TTY: LEDSPFV Tel: +7 (812) 633 38 25 Fax: +7 (812) 633 39 22 E-mail: e.bobrysheva@ rossiya-airlines.com
Additional TTY and/or E-mail authorised to send SCRs: schedule@rossiya-airlines.com		
ROYAL AIR MAROC* Airpoet CASA-ANFA Casablanca Morocco	Khalid Janati Idrissi Scheduling Manager	TTY: CASSPAT Tel: +212 (22) 912463 Fax: +212 (22) 912999 E-mail: kjanati@ royalairmaroc.com
ROYAL BRUNEI AIRLINES* P.O. Box 737 Bandar Seri Begawan BS 8671 Brunei Darusalaam	Joan Lim Manager Schedule Development	TTY: BWNSPBI Tel: +673 2221110 Fax: +673 2229319 E-mail: joan.lim@rba.com.bn
Additional TTY and/or E-mail authorised to send SCRs: cacheegy@rba.com.bn		
ROYAL JORDANIAN* Alia - The Royal Jordanian Airlines 5th Circle Mohammad Ali Janah Street. Building No. 37 P.O. Box 302 Amman 11118 Jordan	Maha Naser Scheduling Manager	TTY: AMMXCRJ Tel: +962 (6) 5202522 Fax: +962 (6) 5202592 E-mail: maha.naser@rj.com
Additional TTY and/or E-mail authorised to send SCRs: ammsprj@rj.com		
RYANAIR LTD Corporate Head Office Dublin Airport Co. Dublin Ireland	Niall O'Connor Head of Schedule	TTY:— Tel: +353 (1) 812 1249 Fax: +353 (1) 812 1338 E-mail: oconnorn@ryanair.com

Postal address	Representative Name and Title	TTY Tel Fax E-mail
SAFI AIRWAYS*	Claus Fischer	TTY:—
4WA-3F, Dubai Airport Free Zone	CCO	Tel: +971 50 551 5086
P.O. Box 54707		Fax: +971 4 299 8894
Dubai		E-mail: info@safiairways.aero
United Arab Emirates		
SAS NORGE	John Nielsen	TTY: STOS1SK
SAS	Manager, Network planning	Tel: +45 (3232) 4354
Dept. CPHON		Fax: +45 (3232) 6767
P.O. Box 150		E-mail: j.nielsen@sas.dk
2770 KASTRUP		
Denmark		
Additional TTY and/or E-mail authorised to send SCRs: sas.slot@sas.se		
SATA AIR ACORES*	Filipe Raposo	TTY: PDLCCSP
Avenida Infante	Head of Scheduling	Tel: +351 (296) 209767
d.Henrique 55-2nd		Fax: +351 (296) 672093
Ponta Delgada 9504-525		E-mail: filipe.raposo@sata.pt
Azores		
Portugal		
SAUDI ARABIAN AIRLINES*	Hasan Alamoudi	TTY: JEDSPSV
C.C. 256	Manager Schedule	Tel: +96 (626) 862507
Jeddah	Development	Fax: +96 (626) 865779
21231		E-mail: haalamoudi@
Saudi Arabia		saudiairlines.com
Additional TTY and/or E-mail authorised to send SCRs: jedspsv@saudiairlines.com		
SCANDINAVIAN AIRLINES SYSTEM*	John Nielsen	TTY: CPHONSK
SAS	Manager, Network Planning	Tel: +45 (3232) 4354
Dept CPHON		Fax: +45 (3232) 6767
P.O. Box 150		E-mail: j.nielsen@sas.dk
2270 KASTRUP		
Denmark		
Additional TTY and/or E-mail authorised to send SCRs: CPHON.SLOT@sas.dk		
SHANDONG AIRLINES*	Haiyan Gao	TTY:—
Shandong Aviation Mansion	Short & Medium-Term Flight	Tel: +86 (531) 85698961
No. 5746 Er huan, East Road	Paln, Network Dept.	Fax: +86 (531) 85698892
Lixia		E-mail: gaohy@
Jinan District		shandongair.com.cn
Shandong PRC		
People's Republic of China		

Postal address	Representative Name and Title	TTY Tel Fax E-mail
SHENZHEN AIRLINES*	Xiong Zhaohua	TTY:—
Shenzhen Airlines, Bao'an District Shenzhen 518128 Guangdong Province People's Republic of China	Vice Manager of Schedule & Network Department	Tel: +86 (755) 27771999 ext 8269 Fax: +86 (755) 27777257 E-mail: xiongzhaohua@shenzhenair.com
SIBERIA (S7) AIRLINES*	Alexander Bashinov	TTY: OVBSPS7
Tolmachevo Airport OB-4 Novosibirsk 633104 Russian Federation	Schedule Manager	Tel: +7 (495) 2284700 ext 4543 Fax: +7 (495) 499 9214799 E-mail: a.bashinov@s7.ru
Additional TTY and/or E-mail authorised to send SCRs: ovbsps7@s7.ru		
SILKAIR*	Zechariah Chai	TTY: SIMMPMI
O5-D Airline House 25 Airline Road 819829 Singapore Singapore	Market Planning Analyst	Tel: +65 (654) 14629 Fax: +65 (654) 26286 E-mail: zech_chai@Singaporeair.com.sg
SINGAPORE AIRLINES LTD*	Rachel Tan	TTY: SINSPSQ
08-C2 Airline House 25 Airline Road Singapore 819829 Singapore	Assistant Manager Network Planning	Tel: +656 6541-5614 Fax: +656 6490-0720 E-mail: huiqin_tan@singaporeair.com.sg
SKY AIRLINES*	Sevilay Tatlici	TTY: AYTSPCR
Guzeloba Mah Ay-1 Sok No. 1 Kaya Plaza A-D Blok Kat:3 Antalya Turkey	Commercial Manager	Tel: +90 (242) 310 8800 Fax: +90 (242) 310 8808 E-mail: sevilay.tatlici@skyairlines.net
SKY WORK AIRLINES	Timo Fabian	TTY:—
Aemmenmattstr. 43 Terminal North 3123 Belp Switzerland	Postholder Ground Operations	Tel: +41 (318) 101846 Fax: +41 (318) 101818 E-mail: t.fabian@skywork.ch
SOUTH AFRICAN AIRWAYS*	Adre Venter	TTY: JNBSPSA
Room 121A, Airways Park Johannesburg International Airport Johannesburg 1627 South Africa	Senior Manager Scheduling & Distribution	Tel: +27 (11) 978 1124 Fax: +27 (11) 978 1694 E-mail: adreventer@flysaa.com
Additional TTY and/or E-mail authorised to send SCRs: JNBRLSA, saascheduling@flysaa.com		

Postal address	Representative Name and Title	TTY Tel Fax E-mail
SRILANKAN AIRLINES*	Sumudu Upatissa	TTY:—
Airline Centre	Manager Network Planning	Tel: +94 (19) 7 33 1322
Bandaranaike International		Fax: +94 (19) 2 33 5144
Airport		E-mail: sumudu.u@
Katunayake		srilankan.aero
Sri Lanka		
Additional TTY and/or E-mail authorised to send SCRs: CMBSPUL, sched.plan@srilankan.aero		
SUN D'OR INTERNATIONAL AIRLINES	Corina Dahan	TTY: TLVEBLY
Ben Gurion Airport	Manager Seasonal	Tel: +972 (3) 9717366
P.O. Box 161	Schedule Planning	Fax: +972 (3) 9730554
70100		E-mail: corinad@elal.co.il
LOD - ISRAEL		
ISRAEL		
SUN-AIR	Trine Dige	TTY: BLLADEZ
Cumulusvej I0	Route Manager	Tel: +45 76989023
7190 Billund		Fax: +45 75338618
Denmark		E-mail: Trine.dige@sunair.dk
SUNEXPRESS*	Andrea Hessler	TTY:—
Am Gruenen Weg 1-3	Scheduling Manager	Tel: +49 (69) 696 28207
65451 Kelsterbach		Fax: +49 (69) 696 28249
Germany		E-mail: andrea.hessler@
		sunexpress.de
SUNEXPRESS DEUTSCHLAND	Andrea Hessler	TTY:—
Am Gruenen Weg 1-3	Scheduling Manager	Tel: +49 (69) 696 28207
65451 Kelsterbach		Fax: +49 (69) 696 28249
Germany		E-mail: andrea.hessler@
		sunexpress.de
SUNWING AIRLINES INC	Clinton Corriea	TTY: YYZSSWG
27 Fasken Drive	Manager, Aircraft	Tel: +1 (416) 620-4955 ext 240
Toronto, M9W 1 K6	Scheduling & Govt. Affairs	Fax: +1 (416) 620-4433
Canada		E-mail: ccorriea@
		flysunwing.com
SVENSKA DIREKTFLYG AB	Karl Oskar Tollsten	TTY:—
Overstevagen 50	Director Ground Operation	Tel: +46 (243) 444 710
78463 Borlange		Fax: +46 (243) 444 799
Sweden		E-mail: karl-oskar.tollsten@
		direktflyg.com

Postal address	Representative Name and Title	TTY Tel Fax E-mail
SWIFT AIR Flight Consulting SL Mozart 32, 2B Madrid 28008 Spain	Jose Masot Schedule Planning	TTY: MADFCVZ Tel: +34 (91) 8043274 Fax: +34 (91) 8043516 E-mail: jmasot@ flightconsulting.com
Additional TTY and/or E-mail authorised to send SCRs: info@flightconsulting.com		
SWISS* P.O. Box CH-8058 Zurich Flughafen Switzerland	Peter Dellenbach Senior Manager Schedule Planning	TTY: ZRHSPLX Tel: +41 1 564 87 42 Fax: +41 58 584 2688 E-mail: peter.dellenbach@ swiss.com
SYRIAN ARAB AIRLINES* P.O. Box 417 Damascus ALHIJAZ - SQR Syrian Arab Republic	Amir Suleiman Scheduling Manager	TTY: DAMSPRB Tel: +963 944635787 Fax: +963 1123497614 E-mail: amirsul@yahoo.com
TAAG ANGOLA AIRLINES Rua da Missao no. 123 Enterpiso Luanda (Angola) P.O. Box 79 Angola	Antonio Da Silva Network & Commercial Planning Deputy Director	TTY:— Tel: +002 (44) 222392833 Fax: +002 (44) 222394476 E-mail: paulo.silva@flytaag.com
TACV - CABO VERDE AIRLINES* Av. Amilcar Cabral C.P. 1 Praia Cabo Verde - Africa Ocidental Republic of Cape Verde	Antonio Pedro Monteiro Schedules Manager	TTY: RAICAVR Tel: +238 608 200/244 Fax: +238 261 8323 E-mail: psapinho@tacv.aero
TAM LINHAS AEREAS* Av Jurandir 856 Lote 4 7 Andar Sao Paulo CEP 04072-000 Jd. Cecy Brazil	Mauro Vieira Schedule Planning Assistant	TTY: SAOSPJJ Tel: +55 (11) 5582 8042 Fax: +55 (11) 5582 9643 E-mail: mauro.vieira@ tam.com.br
Additional TTY and/or E-mail authorised to send SCRs: planeja@tam.com.br		
TAP AIR PORTUGAL* Portela Airport Building AR 27-, 4 DTO Portugal	Alexandre Coutinho Head of Schedules and Distribution Dept.	TTY: LISCJTP Tel: +351 (21) 841 5078 Fax: +351 (21) 841 5525 E-mail: acoutinho@tap.pt

Postal address	Representative Name and Title	TTY Tel Fax E-mail
TAROM* 224F Calea Bucurestilor Henri Comda Airport, Intl. Departures Terminal 2nd floor, Otopeni, 075 100 Romania	Laura Nitu Head of Network Planning Dept.	TTY: BUHSPRO Tel: +40 (21) 2014728 Fax: +40 (21) 2014728 E-mail: laura.nitu@tarom.ro
Additional TTY and/or E-mail authorised to send SCRs: schedules@tarom.ro		
THAI AIRWAYS INTERNATIONAL* 89 Vibhavadi - Rangsit Road Bangkok 10900 Thailand	Nongnuj Ratanavichai Director Traffic Planning	TTY:— Tel: +66 (2) 545 2857 Fax: +66 (2) 545 3896 E-mail: nongnuj.r@ thaiairways.com
THOMAS COOK AIRLINES BELGIUM N.V. Tramstraat 65 Zwijnaarde Vlaanderen 9052 Belgium	Sabine Dhaenekint Scheduling Dept.	TTY:— Tel: +32 (9) 241 1640 Fax: +32 (9) 241 1645 E-mail: sabine.dhaenekint@ thomascook.be
THOMAS COOK AIRLINES SCANDINAVIA Copenhagen Airport South DK-2791 Dragoer Denmark	Pia Sorensen Traffic Planner	TTY:— Tel: +45 32 477200 Fax: +45 45 45 7211 E-mail: Pia.Sorensen@ thomascook.dk
THOMAS COOK AIRLINES UK LTD. 2nd Hangar, Runger Lane Manchester Airport M90 5FL United Kingdom	Louise Oliva Slot Portfolio and Planning Manager	TTY: MANSSMT Tel: +44 (161) 498 4724 Fax: +44 (161) 498 4732 E-mail: louise.oliva@ thomascook.com
Additional TTY and/or E-mail authorised to send SCRs: scheduling@thomascook.com		
THOMSON AIRWAYS Wigmore House Wigmore Luton Bedfordshire LU2 9TN United Kingdom	Belinda Vazquez General Manager - Aviation Planning	TTY:— Tel: +44 (1582) 644084 Fax: +44 (1582) 644235 E-mail: Belinda.Vazquez@ thomson.co.uk

Postal address	Representative Name and Title	TTY Tel Fax E-mail
TIGER AIRWAYS Changi Airport Post Office P.O. Box 82 918143 Singapore	Sharon Kwek Network Analyst	TTY:— Tel: +65 (6822) 2300 ext 255 Fax: +65 (6822) 2310 E-mail: sharonkwek@ TIGERAIRWAYS.COM
TNT AIRWAYS S.A.* Liege Airport Building 101 B-4460 Grace-Hollogne Belgium	Russell Joste Scheduling Manager Network Planning	TTY: LGGSP3V Tel: +32 (4) 239 3511 Fax: +32 (4) 239 3549 E-mail: russell.joste@tnt.com
Additional TTY and/or E-mail authorised to send SCRs: LGGSP3V@tnt.com		
TRANSAERO AIRLINES* Bld. 1, 47, Bolshaya Polyanka Str. Moscow, 119180 Russian Federation	Elgar Khalilov Head of Scheduling Department	TTY: MOWSPUN Tel: +7 (495) 543 9813 Fax: +7 (495) 543 9813 E-mail: elgar.khalilov@ transaero.ru
Additional TTY and/or E-mail authorised to send SCRs: schedule@transaero.ru		
TRANSASIA AIRWAYS* 9F No. 139 Cheng Chou Rd Taipei Chinese Taipei	Jason Chou Dept. Supervisor	TTY: TPESPGE Tel: +886 (2) 2557 5767 x 792 Fax: +886 (2) 2557 0643 E-mail: jcchou@ email.tna.com.tw
TRANSAVIA AIRLINES P.O. Box 7777 NL-1118ZM Schiphol Airport Netherlands	Henk Vos Director of Scheduling & Commerical Planning	TTY: SPLCCHV Tel: +31 (20) 604 6283 Fax: +31 (20) 604 6507 E-mail: henk.vos@ transavia.com
TRANSAVIA FRANCE Zone Orlytech 18 avenue Louis Bleriot 91593 Wissous Cedex France	Gregory Jamet Manager Planning Scheduling & Revenue Management	TTY:— Tel: +33 (1) 56307013 Fax: +33 (1) 56307005 E-mail: gregory.jamet@ fr.transavia.com
TRAVEL SERVICE A.S. K Letisti 1068/30 160 08 Prague 6 Czech Republic	Pavel Zmek Head Coordinator	TTY:— Tel: +420 22011 6046 Fax: +420 22011 5511 E-mail: pavel.zmek@ travelservice.aero

Postal address	Representative Name and Title	TTY Tel Fax E-mail
TUI AIRLINES NEDERLAND B.V. Beech Avenue 43,1119 RA Schiphol-Rijk P.O. Box 75607 Netherlands	Walther Piso Slot and Fleet Suport Manager	TTY:— Tel: +31 (20) 6557357 Fax: +31 (20) 6557396 E-mail: walther.piso@arkefly.nl
TUIFLY GMBH* TUIfly GmbH P.O. Box 42 02 40 D-30662 Hannover Germany	Ansgar Kruse Head of Schedules Planning & Slot Coordination	TTY: HAJSPHF Tel: +49 (511) 9727 248 Fax: +49 (511) 9727 196 E-mail: ansgar.kruse@tuifly.com
TUIFLY NORDIC Soder Malar Strand 27 117 85 Stockholm Sweden	Marcus Karlsson Manager Traffic Planning	TTY:— Tel: +46 (8720) 8820 Fax: +46 (8720) 8801 E-mail: marcus.karlsson@ tuiflynordic.se
TUNISAIR* Boulevard du 7 Novembre 1987 2035 Tunis Carthage Tunisia	Mohsni Zyed Senior Schedule Manager	TTY: TUNSPTU Tel: +216 (70) 837 000 Fax:— E-mail: zyed.mohsni@ tunisair.com.tn
TURKISH AIRLINES* Turkish Airlines General Management Building 10th Floor Ataturk International Airport 34149 Yesilkoy Istanbul Turkey	Billur Gokhan Slot Coordination Manager	TTY:— Tel: +90 (212) 463 63 63 x 13601 Fax: +90 (212) 465 24 92 E-mail: billura@thy.com
UKRAINE INTERNATIONAL AIRLINES* 201-203 Kharkivske Road Kyiv 02121 Ukraine	Inessa Volochai Senior Schedule Manager	TTY: IEVIBPS Tel: +38 (044) 2308488 Fax: +38 (044) 4615160 E-mail: volochai.inessa@ FLYUIA.COM

Additional TTY and/or E-mail authorised to send SCRs: IEVPSPS, schedule.dept@flyUIA.com

Postal address	Representative Name and Title	TTY Tel Fax E-mail
UNITED AIR LINES*	Michele Boyce	TTY: HDQRLUA
HDQRL - 9th Floor Willis Tower 233 South Wacker Drive Chicago, IL 60606 United States	Director, Airport Access	Tel: +1 872-825-8675 Fax: +1 872-825-0460 E-mail: Michele.Boyce@ united.com
Additional TTY and/or E-mail authorised to send SCRs: slots@united.com		
UPS AIRLINES*	James Todd Scott	TTY:—
1400 North Hurstbourne Parkway, 4A Louisville, Kentucky 40223 United States	Global Network Planning Division Manager	Tel: +1 (502) 329 3188 Fax: +1 (502) 329 3199 E-mail: tscott@ups.com
US AIRWAYS*	Tim Quijada	TTY: PHXSPUS
111 W. Rio Salado Pwky Tempe AZ 85251 United States	Senior Analyst International Route Planning	Tel: +1 (480) 693 5043 Fax: +1 (480) 693 3680 E-mail: tim.quijada@ usairways.com
UZBEKISTAN AIRWAYS	Tatyana Silacheva	TTY: TASSPHY
41, Amir Temur Avenue Tashkent, GSP 100060 Uzbekistan	Head of Schedule Department	Tel: +998 (71) 140 4616 Fax: +998 (71) 140 4716 E-mail: tatyana.silacheva@ uzairways.com
Additional TTY and/or E-mail authorised to send SCRs: schedule@airways.uz		
VIETNAM AIRLINES*	Hoang Minh Tri	TTY:—
200 Nguyen Son Str. Long Bien District Ha Noi City Vietnam	Deputy General Manager	Tel: +84 (438) 732732 Fax: +84 (438) 721007 E-mail: trihm@ vietnamairlines.com
VIRGIN AMERICA	Adam Arenstein	TTY:—
555 Airport Blvd Suite 500 Burlingame CA 940 10 United States	Manager - Schedule Planning	Tel: +1 (650) 7627199 Fax: +1 (650) 6480599 E-mail: adam.arenstein@ virginamerica.com
VIRGIN ATLANTIC AIRWAYS*	Gill Huxford	TTY: LGWSPVS
The Office Manor Royal Crawley West Sussex, RH10 9NU United Kingdom	Programme Planning Manager	Tel: +44 (1293) 448214 Fax: +44 (1293) 444479 E-mail: gill.huxford@ fly.virgin.com
Additional TTY and/or E-mail authorised to send SCRs: commercial.planning@fly.virgin.com		

Postal address	Representative Name and Title	TTY Tel Fax E-mail
VIRGIN AUSTRALIA AIRLINES PTY LTD* P.O. Box 1034 Spring Hill Queensland 4004 Australia	Andre Kalan Manager, Schedule Planning	TTY:— Tel: +61 (7) 32952271 Fax: +61 (7) 32520248 E-mail: andre.kalan@virginaustralia.com
VOLGA-DNEPR AIRLINES* Office 3104-3105, Maxdo Centre #8 Xingyi Road, Changning District Shanghai, 200336 People's Republic of China	Igor Gabov General Representative in China	TTY:— Tel: +86 (21) 52082269 Fax: +86 (21) 52080508 E-mail: i.gabov@volga-dnepr.com
Additional TTY and/or E-mail authorised to send SCRs: pdsp@volga-dnepr.com		
WIND ROSE AVIATION COMPANY LTD Office 134, 50/38, Voloska Str. Kiev 04070 Ukraine	Oksana Tkachenko Head of Schedule Department	TTY:— Tel: +38 (044) 492 97 87 Fax: +38 (044) 492 97 89 E-mail: planning@windrose.aero
Additional TTY and/or E-mail authorised to send SCRs: necheporenko@windrose.kiev.ua		
WIZZ AIR HUNGARY World Trade Center 1 Route de l'Aéroport 10 1216 Geneve-Cointrin Switzerland	Nicolas Vareilles Network Development and Scheduling Manager	TTY: BUDSPW6 Tel: +41 (22) 555 9861 Fax: +41 (22) 555 9899 E-mail: nicolas.vareilles@wizzair.com
XIAMEN AIRLINES CO. LTD* 22 Dailiao Road, Xiamen, China People's Republic of China	Guohui Huang Assistant to The President	TTY:— Tel: +86 (592) 5739688 Fax: +86 (592) 5739950 E-mail: hbzy@xiamenair.com.cn
XL AIRWAYS FRANCE Bat Mars - Continental Square II 3 Place Berline - BP 13760 95727 Roissy Charles de Gaulle Cedex France	Christophe Limpens Fleet Manager	TTY:— Tel: +33 (1) 70031583 Fax: +33 (1) 70031668 E-mail: climpens@xlairways.fr
Additional TTY and/or E-mail authorised to send SCRs: programme@xlairways.fr		

Postal address	Representative Name and Title	TTY Tel Fax E-mail
XL AIRWAYS GERMANY Hessenring 13 D-64546 Moerfelden-Walldorf Germany	Marc Robert Baur Schedule Planning Manager	TTY: FRAMTXH Tel: +49 (6105) 9789 187 Fax: +49 (6105) 9789499 E-mail: robert.baur@ xlairways.de
Additional TTY and/or E-mail authorised to send SCRs: FRAXLXH		
YEMENIA YEMEN AIRWAYS* Yemen Sana'a Alhasabah Airport Road Republic of Yemen	Motea Alkobati Scheduling Director	TTY: SAHCPIY Tel: +967 734 555 113 Fax: +967 1 344 435 E-mail: motea.alkobati@ yemenia.com
ZEST AIRWAYS Ticket Sales and Cargo Building Andrews Avenue Cor. Domestic Road Pasay City, 1300 Philippines	Marilou Valdez Supervisor - Network Management	TTY:— Tel: +63 (2) 851 0575 Fax: +63 (2) 851 0575 E-mail: mcvaldez@flyzest.com

II. Airport Coordinators and Facilitators

Postal address	Representative Name and Title	TTY Tel Fax E-mail
AUSTRALIA Airport Coordination Australia P.O. Box 3047 Mascot 2020 NSW Australia	Ernst J. Krolke Chief Executive	TTY:— Tel: +61 (2) 9313 5469 Fax: +61 (2) 9313 4210 E-mail: ejkrolke@coordaus.com.au
Additional TTY and/or E-mail authorised to send SCRs: slots@coordaus.com.au		
AUSTRIA Schedule Coordination Austria GmbH Office Park I, Top B 08/04 A-1300 Vienna Airport Austria	Wolfgang Gallistl Managing Director	TTY: VIECPXH Tel: +43 (1) 7007 23600 Fax: +43 (1) 7007 23615 E-mail: office@slots-austria.com
Additional TTY and/or E-mail authorised to send SCRs: info@slots-austria.com		
BELGIUM Brussels Slot Coordination vzw (BSC) Brussels Airport P.O. Box 27 B-1930 Zaventem 4 Belgium	Didier Hocq General Manager	TTY: BRUACXH Tel: +32 (2) 753 5791 Fax: +32 (2) 753 5790 E-mail: Didier.hocq@brucoord.org
Additional TTY and/or E-mail authorised to send SCRs: BRUACXH@brucoord.org		
BRAZIL GRU Facilitation Committee - Brazil Setor Comercial Sul - Quadra 09 - Lote C Dificio Parque Cidade Corporate - Torre A - 5 Brasilia - DF - Brasil CEP: 70.308-200 Brazil	Roberto Costa Regulation Specialist	TTY:— Tel: +55 (61) 3314 4329 Fax:— E-mail: roberto.costa@anac.gov.br
Additional TTY and/or E-mail authorised to send SCRs: slot@anac.gov.br		
BULGARIA Sofia Airport EAD 1540 Sofia Bulgaria	Dimitar Tcholacov Head of Slot Coordination Department	TTY: SOFLDXH Tel: +359 (2) 9372159 and 9372171 Fax: +359 (2) 9372148 E-mail: d.tcholacov@sofia-airport.bg
Additional TTY and/or E-mail authorised to send SCRs: slot.coordination@sofia-airport.bg		

Postal address	Representative Name and Title	TTY Tel Fax E-mail
CAMBODIA State Secretariat of Civil Aviation Cambodia N 26 Norodom Blvd. Phnom Penh Cambodia	Sivorn Keo Director of Flight Operations & Safety Dept.	TTY: PNHCAYA Tel: +855 15 567 999 Fax: +855 23 22 42 59 E-mail: ksv.ssca@gmail.com
CANADA-YUL Pierre Elliott Trudeau Airport 975, boul. Romeo-Vachon Bureau 317 Dorval, Quebec H4Y 1H1 Canada	Charles Aubé Schedule Facilitator	TTY:— Tel: +1 (514) 633-2959 Fax: +1 (514) 633-3068 E-mail: Charles.Aube@ admtl.com
Additional TTY and/or E-mail authorised to send SCRs: horairedevol@admtl.com		
CANADA-YVR Vancouver Airport Authority P.O. Box 23750 Airport Postal Outlet Richmond, BC V7B 1Y7 Canada	Kyle Galbraith Schedule Planner, Airport Coordination	TTY: YVRIACR Tel: +1 (604) 276 6299 Fax: +1 (604) 232 6205 E-mail: kyle_galbraith@yvr.ca
Additional TTY and/or E-mail authorised to send SCRs: slot_coordination@yvr.ca		
CANADA-YYC The Calgary Airport Authority 2000 Airport Road N.E. Calgary, Alberta T2E6W5 Canada	Linda Mitchell Schedules Facilitator	TTY:— Tel: +1 (403) 717 2237 Fax: +1 (403) 735 1284 E-mail: lindami@yyc.com
Additional TTY and/or E-mail authorised to send SCRs: yycflightschedule@yyc.com		
CANADA-YYZ Airport Coordination Canada Ltd. 210-5955 Airport Road Mississauga, Ontario L4V 1R9 Canada	Munro Smith President and Director, Slot Coordination.	TTY: YYZSCAC Tel: +1 (905) 673 6380 Fax: +1 (905) 905 673 9892 E-mail: MunroSmith@accl.aero
Additional TTY and/or E-mail authorised to send SCRs: cyyzslots@accl.aero		
CHINA ATM Bureau of CAAC No. 12 East San-Huan Road Middle Chadyang District Beijing People's Republic of China	Di Wu Head Coordinator	TTY:— Tel: +861 (877) 86595 Fax: +861 (877) 86580 E-mail: wudi@atmb.net.cn

Postal address	Representative Name and Title	TTY Tel Fax E-mail
CHINESE TAIPEI Airport Coordination Taipei 6F 188 Mingchuan East Road, Sec. 3 Taipei Taiwan ROC Chinese Taipei	Flora Yeh Coordinator	TTY: TPEACXH Tel: +886 (2) 27190972 Fax: +886 (2) 27184348 E-mail: actmail.taa@ msa.hinet.net
Additional TTY and/or E-mail authorised to send SCRs: service@aptcoord.org.tw		
CROATIA Split Airport Cesta dr. Franje Tudjmana 96 21216 Kastel Stafilic Croatia	Goran Boric Ground OPS Coordinator	TTY:— Tel: +385 (21) 203513 Fax:— E-mail: goran.boric@ split-airport.hr
CYPRUS Cyprus Schedules Facilitation C/O Department of Civil Aviation 27 Pindarou Str. Nicosia 1429 Cyprus	Doros Theodorou Air Transport & airports Officer/Schedules Facilitator	TTY: NICSAXH Tel: +357 (22) 404132 Fax: +357 (22) 766552 E-mail: dtheodorou@ dca.mcw.gov.cy
CZECH REPUBLIC Slot Coordination Czech Republic Airport Prague Ruzyne P.O. Box 67 160 08 Prague 6 Czech Republic	Michal Simacek Head Coordinator	TTY: PRGSP7X Tel: +420 (2) 2011 3204 Fax: +420 (2) 2011 5301 E-mail: michal.simacek@ prg.aero
Additional TTY and/or E-mail authorised to send SCRs: slot.coord@csl.cz		
DENMARK ACD - Airport Coordination Denmark & Iceland Vilhelm Lauritzen Alle 1 DK-2770 Kastrup Denmark	Frank Holton MD & Head of Coordination	TTY: CPHACXH Tel: +45 3231 4280 Fax:— E-mail: holton@ airportcoordination.com
Additional TTY and/or E-mail authorised to send SCRs: scr@airportcoordination.com		
FINLAND Airport Coordination Finland ry PL 77, Lentäjäntie 1 E 01531 Vantaa Finland	Tiina Nokkala Head of Slot Coordination	TTY: HELACXH Tel: +358 (400) 511 668 Fax:— E-mail: tiina.nokkala@ slotcoord.com
Additional TTY and/or E-mail authorised to send SCRs: scr@airportcoordination.com		

Postal address	Representative Name and Title	TTY Tel Fax E-mail
FRANCE COHOR ORLYTECH Bat 527 3, Allée Maryse BASTIE 91325 WISSOUS CEDEX France	Eric Herbane Managing Director	TTY: HDQCOXH Tel: +33 (1) 497 58810 Fax: +33 (1) 497 58820 E-mail: eric.herbane@cohor.org
Additional TTY and/or E-mail authorised to send SCRs: hdqcoxh@cohor.org		
GERMANY FRG Coordination Terminal 2E HBK 37 60549 Frankfurt Germany	Birgit Krenzin Director of External Affairs	TTY:— Tel: +49 (69) 690 24830 Fax: +49 (69) 690 59603 E-mail: birgit.krenzin@fhkd.org
Additional TTY and/or E-mail authorised to send SCRs: Krenzin		
GHANA Ghana Airports Company Limited KD Private Mail Bag 36 Kotoka International Airport Accra Ghana	Charles Hanson - Adu Director of Airports Operations	TTY:— Tel: +233 (302) 776171 ext. 2214 Fax: +233 (302) 760386 E-mail: adu.charles@ ghanairports.com.gh
Additional TTY and/or E-mail authorised to send SCRs: slotcoordination@ghanairports.com.gh		
GREECE Hellenic Slot Coordination Authority Athens International Airport, P.O. Box 80113 Spata, Attica, 19019 Building 11 Greece	Evangelos Sagos Chairman	TTY: ATHHAXH Tel: +30 (210) 353 6190 Fax: +30 (210) 353 7418 E-mail: esagos-hsca@ athensairport.gr
HONG KONG Hong Kong Civil Aviation Department Rm 6T-015, Terminal 1 Hong Kong International Airport Lantau Hong Kong(SAR), China	Ching Yin Claudia Wan Senior Operations Officer, Schedule Coordination	TTY:— Tel: +852 (2182) 1218 Fax: +852 (2182) 1209 E-mail: ccywan@cad.gov.hk
HUNGARY Hungarocontrol Zrt. H-1185 Budapest Iglo u. 33-35 Hungary	Laszlo Szeness Head of Airport Coordination	TTY: BUDLR7X Tel: +36 (1) 293 4050 Fax: +36 (1) 293 4049 E-mail: budcoord@ hungarocontrol.hu

Postal address	Representative Name and Title	TTY Tel Fax E-mail
ICELAND ACD - Airport Coordination Denmark & Iceland Vilhelm Lauritzens Alle 1 DK-2770 Kastrup Denmark	Frank Holton Managing Director & Head of Coordination	TTY: KEFACXH Tel: +45 3231 4280 Fax:— E-mail: holton@airportcoordination.com
Additional TTY and/or E-mail authorised to send SCRs: scr@airportcoordination.com		
INDIA - BLR Bangalore International Airport Ltd. Administration Block Devanahalli Bangalore - 560300 India	Sachin Sadashiv Deo Head Planning & Statistics	TTY:— Tel: +91 (80) 66782125 Fax: +91 (80) 66783377 E-mail: sachin@bialairport.com
Additional TTY and/or E-mail authorised to send SCRs: slotcoordination@bialairport.com		
INDIA - BOM Mumbai International Airport PVT Ltd. Chatrapati Shivaji International Airport Mumbai 400 099 India	Tariq Butt VP - Airport Marketing & Aero Business	TTY:— Tel: +91 (22) 66852085 Fax: +91 (22) 66851653 E-mail: tariq.butt@gvk.com
Additional TTY and/or E-mail authorised to send SCRs: slots@csia.in		
INDIA - DEL Delhi International Airport PVT Ltd. New Udaan Bhavan Opposite T3, IGI Airport New Delhi 110037 India	Jitendra Singh General Manager (Slot & Capacity Management)	TTY:— Tel: +91 (11) 47197035 Fax: +91 (11) 47197034 E-mail: jitendra.singh@gmrgroup.in
Additional TTY and/or E-mail authorised to send SCRs: intslots.igia@gmrgroup.in		
INDONESIA Garuda Indonesia 1st Floor Management Building Garuda City, Soekarno-Hatta Int. Airport Cengkareng 19120 Indonesia	Esty Widyawati Senior Manager	TTY: JKTSPGA Tel: +62 (21) 25601122 Fax: +62 (21) 25601130 E-mail: esty.widyawati@garuda-indonesia.com
Additional TTY and/or E-mail authorised to send SCRs: slotcoord.id@garuda-indonesia.com		

Postal address	Representative Name and Title	TTY Tel Fax E-mail
IRELAND ACL International - Ireland Capital Place 120 Bath Road Hayes, Middlesex UB3 5AN United Kingdom	James Cole Director of ACL International	TTY: LONACXH Tel: +44 (208) 564 0600 Fax: +44 (208) 564 0691 E-mail: James.Cole@ acl-international.com
ISRAEL Israel Airports Authority Ben Gurion Airport P.O. Box 7 71700 Israel	Talya Savransky Head Coordinator	TTY:— Tel: +972 (3) 9752073 Fax: +972 (3) 9752075 E-mail: talias@iaa.gov.il
Additional TTY and/or E-mail authorised to send SCRs: tlvacxh@iaa.gov.il		
ITALY Assoclearance Piazzale Degli Archivi 41 00144 Rome Italy	Nadio Di Rienzo	TTY:— Tel: +39 (06) 81100500 Fax: +39 (06) 81100529 E-mail: segreteria@ assoclearance.it
Additional TTY and/or E-mail authorised to send SCRs: assoclearance@assoclearance.it		
JAPAN - NGO NGO Schedule Facilitation 1-1, Centrair, Tokoname Aichi, 479-8787 Japan	Nobuyuki Kondo Chief Air Traffic Services Flight Information Officer	TTY:— Tel: +81 (569) 382184 ext 1406 Fax: +81 (569) 38 2172 E-mail: ngo-schedule@ cab.mlit.go.jp
Additional TTY and/or E-mail authorised to send SCRs: ngo-schedule@cab.mlit.go.jp		
JAPAN SCHEDULE COORDINATON (JSC) Japan Schedule Coordination (JSC), Japan Aeronautic Association (JAA) Aviation Building, 4th Floor, 1-18-1 Shimbashi Minato-ku, Tokyo 105-0004 Japan	Hiroki Takeda Head Coordinator	TTY:— Tel: +81 (3) 3502 2721 Fax: +81 (3) 3502 2720 E-mail: takeda@ schedule-coordination.jp

Postal address	Representative Name and Title	TTY Tel Fax E-mail
KOREA KASO Room 2069 Incheon Intl. Airport 2851, Unseo-Dong, Joong-Gu, Incheon-City, 400-340 Republic of Korea	Kee Young Nam Head Coordinator	TTY: SELACXH Tel: +82 (32) 7402156 Fax: +82 (32) 7413982 E-mail: kaso-korea@ hanmail.net
Additional TTY and/or E-mail authorised to send SCRs: kaso-korea@hanmail.net		
KOSOVO - PRN Limak Kosovo International Airport Vrelle, Lipjan-Kosova 10000 Pristina Kosovo	Driton Hyseni Duty OPS & Schedule Facilitator Manager	TTY:— Tel: +381 (38) 59 58 293 Fax: +381 (38) 59 58 189 E-mail: scheduleprn@ limakkosovo.aero
Additional TTY and/or E-mail authorised to send SCRs: driton.hyseni@airportpristina.com		
KUWAIT Directorate General of Civil Aviation - KUWAIT Kuwait International Airport P.O. Box 17 Safat 13001 Kuwait	Sultan Al-Shewaiee Superintendent Air Transport	TTY: KWIAPYA Tel: +965 24768772 Fax: +965 34658 E-mail: at-ops@ kuwait-airport.com.kw
MALTA Malta International Airport Aviation Avenue - Gudja Luqa LQA 4000 Malta	Martin Dalmas Head of Scheduling Coordination	TTY: MLASLXH Tel: +356 2369 6532 Fax: +356 249 564 E-mail: martin.dalmas@ maltairport.com
Additional TTY and/or E-mail authorised to send SCRs: scm@maltairport.com		
NETHERLANDS Airport Coordination Netherlands Triport 1 Evert-Van De Beekstr 23 1118 CL Schiphol Netherlands	Caroline Ditvoorst Managing Director	TTY: SPLACXH Tel: +31 (20) 405 9730 Fax: +31 (20) 405 9731 E-mail: info@slotcoordination.nl
Additional TTY and/or E-mail authorised to send SCRs: SCR@SLOTCOORDINATION.NL		

Postal address	Representative Name and Title	TTY Tel Fax E-mail
NEW ZEALAND ACL International - New Zealand International Terminal Building, First Floor P.O. Box 73-138, Auckland Airport Auckland 2150 New Zealand	Bruce Cargill	TTY: LONACXH Tel: +64 (0) 9 215 6104 Fax:— E-mail: bruce.cargill@acl-international.com
Additional TTY and/or E-mail authorised to send SCRs: slots@acl-international.com		
NORWAY Airport Coordination Norway Flyporten 2060 Gardermoen Norway	Fred Andreas Wister Head Coordinator/CEO	TTY: OSLACXH Tel: +47 64819050 Fax: +47 819051 E-mail: fred.andreas.wister@osl.no
Additional TTY and/or E-mail authorised to send SCRs: scr@airportcoordination.com		
PAKISTAN Civil Aviation Authority of Pakistan Headquarters PCAA Terminal 1 Karachi Airport Karachi Pakistan	Khawar Ghayas General Manager Air Transport National Regulation	TTY:— Tel: +92 (21) 99242033 Fax: +92 (21) 9242032 E-mail: khawar.ghayas@caapakistan.com.pk
PHILIPPINES Airport Coordination Philippines P.O. Box 3047 Sydney International Airport New South Wales 2020, Australia Philippines	Petra Popovac Manager Coordination	TTY:— Tel: +612 (9313) 5469 Fax: +612 (9313) 4210 E-mail: slots@coordaus.com.au
POLAND ACL International - Poland Capital Place 120 Bath Road Hayes, Middlesex UB3 5AN United Kingdom	James Cole Director of ACL International	TTY: LONACXH Tel: +44 (208) 564 0600 Fax: +44 (208) 564 0691 E-mail: james.cole@slottrade.aero

Postal address	Representative Name and Title	TTY Tel Fax E-mail
PORTUGAL ANA, Aeroportos de Portugal SA Alameda das Comunidades Portuguesas 1700-007 Lisbon Portugal	Isabel Cysneiros Head of Coordination	TTY: LISCSXH Tel: +351 (21) 8445220 Fax: +351 (21) 8445222 E-mail: idcysneiros@ana.pt
Additional TTY and/or E-mail authorised to send SCRs: Our telephone nbr is: 00 351 21 8445220, liscsxh@ana.pt		
RUSSIA-LED Northern Capital Gateway St Petersburg, Russian Federation Pulkovo Airport Terminal 1, Office 30641 Russian Federation	Azer Samedov Head of Scheduling	TTY: LEDSP7X Tel: +1 (7812) 3314286 Fax:— E-mail: a.samedov@pulkovo-airport.com
RUSSIA-SVO Sheremetyevo International Airport 141400 Moscow Region Khimki town Russian Federation	Andrey Popov Chief Coordinator	TTY: SVOHP7X Tel: +7 (495) 5783312 Fax: +7 (495) 2343115 E-mail: coordination@svo.aero
RUSSIA-VKO Vnukovo Airport Moscow 12, 1st Reisovaya Str. Moscow 119027 Russian Federation	Anatoliy Fatin Head of Schedule Coordination	TTY:— Tel: +7 (495) 436 2641 or 436 8753 Fax: +7 (495) 436 2468 E-mail: Anatoliy.Fatin@vnukovo.ru
SINGAPORE Changi Slot Coordination P.O. Box 168 Singapore Changi Airport Singapore 918141 Singapore	June Tan Senior Manager	TTY:— Tel: +65 6541 3065 Fax: +65 6542 5390 E-mail: june.tan@changiairport.com
Additional TTY and/or E-mail authorised to send SCRs: csc@changiairport.com		
SLOVAKIA Airport Bratislava Letisko M.R. Stefanika, Airport Bratislava, a.s. (BTS) SK-82311 Bratislava 216 Slovakia	Peter Psenica Operations Manager & Schedules Facilitator	TTY: BTSSC7X Tel: +421 (2) 3303 3310 Fax: +421 (2) 3303 3301 E-mail: peter.psenica@airportbratislava.sk

Postal address	Representative Name and Title	TTY Tel Fax E-mail
SOUTH AFRICA Air Traffic Navigation Services Private Bag X 1 Bonaero Park 1622 South Africa	Sandile Maphanga Manager CAMU	TTY:— Tel: +27 (11) 928-6433 Fax: +27 (11) 928-6420 E-mail: SandileM@atns.co.za
SPAIN AENA (Spanish Airports & Air Navigation) c/Peonias No. 12 28042 Madrid Spain	Ignacio Monasterio Slot Coordination Manager	TTY: MADCHYA Tel: +34 (91) 321 1374 Fax: +34 (91) 321 1348 E-mail: imonasterio@aena.es
Additional TTY and/or E-mail authorised to send SCRs: slot.coord@aena.es		
SWEDEN Airport Coordination, Sweden P.O. Box 202 S-19047 Stockholm-Arlanda Sweden	Anders Nordfalk Coordinator	TTY: ARNACXH Tel: +46 (8) 797 8266 Fax: +46 (8) 797 8265 E-mail: anders@arnslot.se
Additional TTY and/or E-mail authorised to send SCRs: scr@airportcoordination.com		
SWITZERLAND Slot Coordination, Switzerland P.O. Box 350 CH-8058 Zurich-Airport Switzerland	Erich Rindlisbacher Head of Coordination	TTY: ZRHACXH Tel: +41 (43) 816 77 66 Fax: +41 (43) 816 77 67 E-mail: erich.rindlisbacher@slotcoord.ch
Additional TTY and/or E-mail authorised to send SCRs: info@slotcoord.ch		
THAILAND Slot Coordination Thailand Thailand	Vichit Saralamba Head Coordinator, Department of Civil Aviation (DCA)	TTY: HDQYYTG Tel: +662 286-8152 or 5452916 Fax: +662 287-3139 or 545-3896 E-mail: coordination@slotthai.com
Additional TTY and/or E-mail authorised to send SCRs: HDQYOTG		
TUNISIA Tunisair Handling 18 Rue des Entrepreneurs La Charguia II 2035 Tunis Tunisia	Kais Besbes Airport Slot Manager	TTY: TUNKEXH Tel: +216 98201861 Fax: +216 71942188 E-mail: kais.besbes@tunisairhandling.com.tn
Additional TTY and/or E-mail authorised to send SCRs: tunisia-sked@tunisairhandling.com.tn		

Postal address	Representative Name and Title	TTY Tel Fax E-mail
TURKEY Directorate General of State Airports (DHMI) for Turkish Coordination Ataturk Havalimani Dis Hatlar Gelis Terminali 34830 Yesilkoy Istanbul Turkey	Recep Tosun National Head Coordinator	TTY:— Tel: +90 (212) 463 7777/1290 Fax: +90 (212) 4655290 E-mail: recep.tosun@dhmi.gov.tr
Additional TTY and/or E-mail authorised to send SCRs: dhmi.slot@dhmi.gov.tr		
UKRAINE - KBP International Airport Boryspil Boryspil - 7 Kyiv Region 08307 Ukraine	Maryna Zenkovets CDM Manager	TTY: KBPDC7X Tel: +38 (044) 281 7005 Fax: +38 (044) 281 7544 E-mail: zenkovets@kbp.kiev.ua
UNITED ARAB EMIRATES - AUH Abu Dhabi International Airport c/o Airport Coordination Australia P.O. Box 3047 Mascot 2020 Australia	Ernst J. Krolke Chief Executive	TTY:— Tel: +61 (2) 9313 5469 Fax: +61 (2) 9313 4210 E-mail: ejkrolke@coordaus.com.au
Additional TTY and/or E-mail authorised to send SCRs: slots@coordaus.com.au		
UNITED ARAB EMIRATES - DXB ACL International - Ireland Capital Place 120 Bath Road Hayes, Middlesex UB3 5AN United Arab Emirates	James Cole Director of ACL International	TTY: LONACXH Tel: +44 (208) 564 0600 Fax: +44 (208) 564 0691 E-mail: James.Cole@acl-international.com
Additional TTY and/or E-mail authorised to send SCRs: info@acl-international.com		
UNITED KINGDOM ACL - Airport Coordination Ltd - UK Capital Place 120 Bath Road Hayes, UB3 5AN United Kingdom	David Hill Head of Coordinaton	TTY:— Tel: +44 (0) 2085640608 Fax: +44 (0) 2085640691 E-mail: david.hill@acl-uk.org
Additional TTY and/or E-mail authorised to send SCRs: slots@acl-international.com		

Postal address	Representative Name and Title	TTY Tel Fax E-mail
USA - CIAG Chicago International Airlines Group P.O. Box 661125 O'Hare Intl. Airport Chicago, IL 60666 United States	Jack W. Ranttila Executive Director	TTY: CHICTCR Tel: +1 (773) 894 2525 Fax: +1 (773) 894 2549 E-mail: jackranttila@cicatec.com
USA - EWR Newark Liberty International Airport 113 Carmel Drive Egg Harbor Township New Jersey,08234 United States	Kaare H. Hansen Head Coordinator	TTY:— Tel: +1 (609) 7888777 Fax: +1 (609) 7988777 E-mail: kaarehh@comcast.net
Additional TTY and/or E-mail authorised to send SCRs: ewrcoordination@comcast.net		
USA - SFO San Francisco International Airport P.O. Box 250400 San Francisco, CA 94125-0400 United States	Jeff Seid Executive Director SFOTEC	TTY: SFOJSCR Tel: +1 (650) 821 0401 Fax: +1 (650) 821 0408 E-mail: jeffseid@aol.com
USA - ORD-EWR-JFK-SFO Federal Aviation Administration Federal Aviation Administration 800 Independence Ave SW Room 915R Washington DC United States	Rob Hawks Attorney	TTY:— Tel: +202 (267) 7143 Fax: +202 (267) 7971 E-mail: rob.hawks@faa.gov
Additional TTY and/or E-mail authorised to send SCRs: 7-awa-slotadmin@faa.gov		
VIETNAM Civil Aviation Administration of Vietnam 119 Nguyen Son Gialam Airport Long Blen, Hanoi Vietnam	Truong Nguyen Manh Official	TTY:— Tel: +84 (4) 38272281 Fax: +84 (4) 38272290 E-mail: nguyentruong@ caa.gov.vn

III. Non Airline Contacts

Postal address	Representative Name and Title	TTY Tel Fax E-mail
EUACA c/o Brussels Slot Coordination (BSC) Brussels Airport P.O. Box 27 B-1930 Zaventem 4 Belgium	Chairman	TTY:— Tel:— Fax:— E-mail: Chairman@EUACA.org
IATA 33 Route de l'Aeroport, P.O. Box 416 CH-1215 Geneva 15 Airport Switzerland	Michael Gill Senior Legal Counsel	TTY:— Tel:— Fax:— E-mail: gillm@iata.org
IATA 800 Place Victoria P.O. Box 113 Montreal, Quebec H4Z 1M1 Canada	Isabella Ioannoni Manager, Passenger Standards (SISC Secretariat)	TTY:— Tel: +1 (514) 874 0202 Ext. 3440 Fax: +1 (514) 390 6773 E-mail: ioannonii@iata.org
IATA 33 Route de l'Aeroport, P.O. Box 416 CH-1215 Geneva 15 Airport Switzerland	Claire Mackenzie Assistant Manager, Worldwide Airport Slots	TTY:— Tel: +44 (22) 770 2716 Fax: +44 (22) 770 2639 E-mail: mackenziec@iata.org
IATA 33 Route de l'Aeroport, P.O. Box 416 CH-1215 Geneva 15 Airport Switzerland	Cassandra Raitsidis Assistant Manager, Worldwide Airport Slots	TTY:— Tel: +41 (22) 770 2774 Fax: +41 (22) 770 2926 E-mail: raitsidisc@iata.org
IATA 33 Route de l'Aeroport, P.O. Box 416 CH-1215 Geneva 15 Airport Switzerland	Lara Reed Manager, Worldwide Airport Slots	TTY:— Tel: +44 (22) Fax:— E-mail: reedl@iata.org
IATA 33 Route de l'Aeroport, P.O. Box 416 CH-1215 Geneva 15 Airport Switzerland	Peter Stanton Head of Worldwide Airport Slots	TTY:— Tel: +41 (22) 770 2738 Fax: +41 (22) 770 2926 E-mail: stantonp@iata.org

Postal address	Representative Name and Title	TTY Tel Fax E-mail
IATA 33 Route de l'Aeroport, P.O. Box 416 CH-1215 Geneva 15 Airport Switzerland	Marie Zitkova Manager, Messaging Standards	TTY:— Tel: +41 Fax:— E-mail: zitkovam@iata.org
WWACG c/o Brussels Slot Coordination (BSC) Brussels Airport P.O. Box 27 B-1930 Zaventem 4 Belgium	Erich Rindlisbacher Chairman	TTY:— Tel:— Fax:— E-mail: Chairman@ WWACG.org

ATTACHMENT 3
MCT COORDINATOR CONTACTS

Amendments to contact details below should be sent to airlinecoding@iata.org

Legend:

* IATA Member or IATA Associate Member Airline

Mr. Daire Madigan
Network Planning
AER LINGUS LIMITED*
Dublin Airport
Dublin
Ireland
Tel: +353 (1) 8662243
E-mail: daire.madigan@aerlingus.com

Rogelio Perez Royko
CRC & Schedule Manager
AERO REPUBLICA S.A.*
Av. Eldorado-Entrada No. 1
Terminal Aereo Simon Bolivar
Bogota
Colombia
Tel: +507 304 2736
E-mail: rperez@copaair.com

Mr. Andrey Opolev
Deputy Head of Schedule Planning
AEROFLOT RUSSIAN AIRLINES*
10, Arbat Str.
Moscow
Russian Federation 119002
Tel: +7 (495) 753 8626
E-mail: mowspsu@aeroflot.ru

Ms. Christian Deveni
Schedule Change Manager
AEROLINEAS ARGENTINAS*
Bouchard 547
9th Floor
Buenos Aires Buenos Aires
Argentina 1106
Tel: +54 (11) 4320 2094
E-mail: cdenevi@aerolineas.com.ar

Mrs. Esperanza Monterde
Long Term Schedules Manager
AEROMEXICO AEROVIAS DE MEXICO S.A. DE C.V.*
Paseo de la Reforma 445
Col. Cuauhtemoc
Mexico City D.F.
Mexico 06500
Tel:—
E-mail: emonterde@aeromexico.com.mx

Ms. Alicia Vita
Manager Tactical Scheduling
AEROVIAS DEL CONTINENTE AMERICANO S.A. AVIANCA*
Av. Calle 26 No. 59-15 Piso 8
Bogota
Colombia
Tel: +57 (1) 587-7700
E-mail: avita@avianca.com

Mr. Amier Lyacine
Directeur Programmation
AIR ALGERIE*
1 Place Maurice Audin
Algiers
Algeria 16100
Tel: +213 21509308
E-mail: yamier@airalgerie.dz

Ms. Tanya Boismier
Senior Director, Scheduling
AIR CANADA*
YUL 1257, C.P. 14000
Succursale Aeroport
Montreal Quebec
Canada H4Y 1H4
Tel: +1 (514) 422 5954
E-mail: tanya.boismier@aircanada.ca

Bruno Bernelin
Schedule and Code Share Publication
AIR FRANCE*
45 rue de Paris
Roissy CDG Cedex
France 95747
Tel: +33 (1) 41566915
E-mail: brbernelin@airfrance.fr

Ms. Annie Thomas
Assistant Manager - Revenue Management
AIR INDIA LIMITED*
Air India Building Nariman Point
Mumbai
India 400 021
Tel: +91 (22) 26265555
E-mail: a.thomas@airindia.in

Mrs. Catherine Tchuwa
Schedule Planning Superintendent
AIR MALAWI LIMITED*
4 Robins Road
P.O. Box 84
Blantyre
Malawi
Tel:—
E-mail: tchuwa-c@airmalawi.com

Mr. S. Tonna
Manager Schedules Planning
AIR MALTA P.L.C.*
Head Office
TRDQ L-AVJAZZJONI
Luqa
Malta
Tel:—

Ms. A Rijarua
Supersivor Flight Control
AIR NAMIBIA*
Dr. Kulz Street 27-29
Windhoek
Namibia 9000
Tel: +264 (61) 299 6158
E-mail: arijarua@airnamibia.com.na

Mr. Ian Cox
Schedule Database Coordinator
AIR NEW ZEALAND LIMITED*
Private Bag 92007
Zone 2, Level 4, 185 Fanshawe Street
Auckland
New Zealand 1010
Tel: +006 (9) 336 2601
E-mail: ian.cox@airnz.co.nz

Mr. IamoLohia Garo
Planning Manager
AIR NIUGINI PTY LIMITED DBA AIR NIUGINI*
P.O. Box 7186
ANG House, Jacksons Airport
Boroko
Papua New Guinea
Tel: +675 327 3602
E-mail: lgaro@airniugini.com.pg

Ms. Sonia Mora Aliaga
Scheduling and Traffic Rights Manager
AIR NOSTRUM L.A.M.S.A.*
Av. Comarques Pars Valencia - 2
Zona Servicio Aeropuerto De Valencia
Quart de Poblet Valencia
Spain and Canary Islands 46930
Tel: +34 (96) 1960245
E-mail: smora@airnostrum.es

Mr. Robert Rounds
Manager Strategic Planning
AIR PACIFIC LTD.*
PMB Nadi International Airport
Fiji Islands
Fiji
Tel: +679 673 7403
E-mail: robert.rounds@airpacific.com

Space Controllers
AIR TAHITI*
Aeroport de Thaiti-FAA'A
P.O. Box 314
Papeete Tahiti
French Polynesia 98713
Tel: +689 864 012
E-mail: space@airthaiti.pf

Ms. Vaitiare Chane
CRS Specialist
AIR TAHITI NUI*
Rue Paul Gauguin
B.P. 1673, Immeuble Dexter
Papeete Tahiti
French Polynesia 98713
Tel: +689 46 02 69
E-mail: resacsi@airtahitinui.pf

Mr. Dominic Louis
Head of Market Research and Planning
AIR TANZANIA COMPANY LTD.
P.O. Box 543
Tancot House City Drive
Dar Es Salaam
Tanzania, United Republic of
Tel:—
E-mail: dominiclouis@airtanzania.com

Mr. Forbes Zaranyika
Planning Manager
AIR ZIMBABWE (PVT) LTD.
P.O. Box Ap1
Harare Airport
Harare
Zimbabwe
Tel: +263 (4) 575 111
E-mail: fzaranyika@airzimbabwe.aero

Ms. Jody Stevenson
Manager, Schedule Distribution
ALASKA AIRLINES INC.*
P.O. Box 68900
19300 Pacific Highway South
Seattle Washington
USA 98188
Tel: +1 (206) 392 5612
E-mail: jody.stevenson@alaskaair.com

Ms. Mami Okuno
Passenger Service Planning, Airport Operations Dep
ALL NIPPON AIRWAYS CO. LTD.*
3-3-2 Haneda Airport
Ota-ku, Tokyo
Japan 144-0042
Tel: +81 (3) 5757 5274
E-mail: m.mihira@ana.co.jp

John Marquet
Manager Schedule Resources and Publication
AMERICAN AIRLINES INC.*
P.O. Box 619612, Mail Drop 5544
Dallas/Fort Worth International Airport
Dallas Texas
USA 75261-9612
Tel: +1 (817) 931-6776
E-mail: john.marquet@aa.com

Mr. A.A. Hamid
Sales Manager
ARIANA AFGHAN AIRLINES
Afghan Air Authority Building
Ansari Watt, P.O. Box 76
Kabul
Afghanistan
Tel:—

Mr. Alexander Pour
Operative Network Planning
AUSTRIAN AIRLINES AG DBA AUSTRIAN*
Office Park 2
P.O. Box 100
Vienna
Austria A-1300
Tel: +43 (05) 1766
E-mail: alexander.pour@austria.com

Mr. Calliope Gibson
Revenue Manager
BAHAMASAIR HOLDINGS, LIMITED
Windsor Field Road
P.O. Box N-4881
Nassau
Bahamas
Tel: +1 (242) 702 4100
E-mail: cgibson@bahamasair.com

Ms. Supannika Kritphonchai
Deputy Manager - GDS & Distribution
BANGKOK AIRWAYS CO. LTD.*
11th Floor, Marketing Department
99 Vibhavadi - Rangsit road
Chatuchak, Bangkok
Thailand 10900
Tel: +66 (2) 265 5689
E-mail: supannika@bangkokair.com

Ms. K. Roach
Traffic & CRS Co--ordinator
BRADLEY AIR SERVICES LIMITED T/A FIRST AIR
Carp Airport
3257 Carp Road
Carp Ontario
Canada K0A 1L0
Tel:—
E-mail: kroach@firstair.ca

Revenue Management
BRITISH AIRWAYS P.L.C.*
P.O. Box 365
Waterside
Harmondsworth West Drayton
United Kingdom UB7 0GB
Tel:—
E-mail: availability.1.preference@ba.com

Mr. Andy Gee
Manager, Current Scheduling
BRITISH MIDLAND AIRWAYS LTD. DBA BMI*
Donington Hall
Castle Donington
Derby
United Kingdom DE74 2SB
Tel: +44 (1332) 854 206
E-mail: andy.gee@flybmi.com

Mrs. Carine Van Saene
Manager Schedule Dist.
BRUSSELS AIRLINES N.V.*
Corporate Village
Da Vincilaan 9, Box 4.1
Zaventem
Belgium B-1930
Tel:—
E-mail: carine.vansaene@brusselsairlines.com

Maya Lazarova
Reservations and Distribution Department
BULGARIA AIR*
1 Brussels Blvd.
Sofia Airport
Sofia
Bulgaria 1540
Tel: +359 (2) 4020 590
E-mail: mlazarova@air.bg

Ms. S. Ross-Hitch
Manager, Marketing Services & Systems
CALM AIR INTERNATIONAL LTD.
90 Thompson Drive
Thompson Manitoba
Canada R8N 1Y8
Tel: +1 (204) 677 0421
E-mail: sross-hitch@calmair.com

Mr. Leslie Lu
Operations Manager
CATHAY PACIFIC AIRWAYS LTD.*
8 Scenic Road
Hong Kong Int'l Airport
Lantau
Hong Kong (SAR), China
Tel: +852 27475443
E-mail: leslie_lu@cathaypacific.com

Ms. Jenny Tam-Viola
Senior Manager, Pricing
CEBU PACIFIC AIR
No. 30 EDSA Corner Pioneer Street
Mandaluyong City
Philippines 1550
Tel:—
E-mail: jenny.tam@cebupacificair.com

Ms. Rebecca Sun
CHINA AIRLINES*
7F, 131, Sec 3, Nanking East Rd
Taipei
Chinese Taipei 104
Tel:—
E-mail: rebecca.sun@china-airlines.com

Mr. G. Zhengrong
Flight Plan Office
CHINA EASTERN AIRLINES*
No. 2550 Hong Qiao Road
Shanghai
People's Republic of China 200335
Tel:—

Mr. Damian Manly
CITYJET*
Swords Business Campus
Balheary Road
Dublin
Ireland
Tel:—
E-mail: damina.manly@cityjet.com

Mr. F. Cojuc
Schedulung Manager
COMPANIA MEXICANA DE AVIACION S.A. DE C.V.
Col. Del Valle P.O. Box 12-813
Xola 535, Piso 30
Mexico City D.F.
Mexico 03100
Tel:—

Mr. Rogelio Perez Royko
CRC & Schedules Manager
COMPANIA PANAMENA DE AVIACION, S.A. (COPA)*
Avenida Justo Arosemena y, Calle 39
Edificio Copa Airlines, P.O. Box 1572
Panama City
Panama 1
Tel: +507 304 2736
E-mail: rperez@copaair.com

Mr. Tom Mickelson
Schedule Administration
CONTINENTAL AIRLINES, INC.*
1600 Smith Street
Houston Texas
USA 77002
Tel:—

Mr. K. Ohira
Manager Sched Planning
CONTINENTAL MICRONESIA, INC.*
Ab Won Pat International Airport
P.O. Box 8778 G
Tamuning
Guam 96931
Tel:—

Mr. R. Ramos
Reservations Manager
CUBANA DE AVIACION S.A.*
Calle 23 No. 64, Vedado, C.P. 10400
La Habana
Cuba 10400
Tel:—

Mr. Jan Cernik
Schedule Planning & Slot Department
CZECH AIRLINES A.S,. CSA*
APC - Building APC, Ruzyne Airport
Prague
Czech Republic 160 08
Tel: +420 (220) 115 359
E-mail: jan.cernik@csa.cz

Mrs. Patricia Schurich
Head of Team National and International Airline
DEUTSCHE BAHN AG
Stephensonstrabe 1
Frankfurt
Germany 60326
Tel: +49 (69) 265 6488
E-mail:
patricia.schurich@deutschebahn.com

Mr. Ralf Baerwalde
Team Manager Schedule Management
DEUTSCHE LUFTHANSA AG*
Lufthansa Aviation Center
Frankfurt/Main
Germany 60546
Tel: +49 (69) 696 4942
E-mail: schedulemanagement@dlh.de

Mrs. Mohshen Ayoub
Schedule & Traffic Manager
EGYPTAIR*
Cairo International Airport
Cairo
Egypt
Tel: +2 (02) 2696 3110
E-mail: caittms@egyptair.com

Mr. Jay Diamond
MCT Coordinator
EL AL ISRAEL AIRLINES LTD.*
P.O. Box 41
Ben Gurion International Apt.
Tel Aviv
Israel 70100
Tel: +972 (3) 971-7005
E-mail: jaydi@elal.co.il

Mr. A Santhosh Kumar
Airport Services Support Controller
EMIRATES*
P.O. Box 686
Dubai
United Arab Emirates
Tel: +971 4 504 7579
E-mail: a.santhosh@emirates.com

Mr. Tadesse Tilahun Tessema
Manager, Passenger Schedule
ETHIOPIAN AIRLINES ENTERPRISE*
P.O. Box 1755
Addis Ababa
Ethiopia
Tel:—
E-mail: tadesset@ethipoianairlines.com

Mr. Ralf Barwalde
Team Manager Schedule Management
EUROWINGS GMBH*
Flugplatz 21
Dortmund
Germany D-44319
Tel: +49 (69) 696 4942
E-mail: schedulemanagement@dlh.de

Mr. Victor Lee
Manager
EVA AIRWAYS CORPORATION*
EVA Air Building
376 Hsin-nan Rd, Sec 1, Luchu
Tao-Yuan Hsien
Chinese Taipei 338
Tel: +886 (3) 351 6544
E-mail: victorlee@evaair.com

Ms. Jake Mei
Deputy Manager
FAR EASTERN AIR TRANSPORT CORP.
No. 5, Alley 123, Lane 405
Tun Hwa N. Road
Taipei
Chinese Taipei 10548
Tel: +886 (2) 271 21 555
E-mail: chmei@fat.com.tw

Mrs. Reija Lehti
Manager, Schedules Distribution
FINNAIR OYJ*
P.O. Box 15
Vantaa
Finland FIN-01531
Tel: +358 408 21 9927
E-mail:
schedulingmanagement@finnair.com

Mr. Rr. Martiwi Rahayuningsih Siswoyo
Staff of Schedule Planning
GARUDA INDONESIA*
3rd Floor, Management Building
Garuda Maintenance Facility
Cengkareng, Banten
Indonesia 19130
Tel:—
E-mail: rahayuningsih@garuda-indonesia.com

Ms. Monica Steenerson
Director Interline
GRAND CANYON AIRLINES, INC. DBA SCENIC AIRLINES
2705 Airport Drive
Las Vegas Nevada
USA 89032
Tel:—
E-mail: msteenerson@scenic.com

Mr. Dilhan Haradasa
Senior Manager Scheduling
GULF AIR B.S.C. (C)*
P.O. Box 138
Manama
Bahrain
Tel:—
E-mail: dilhan.haradassa@gulfair.com

Mr. Robert Lamansky
Director Schedule Planning
HAWAIIAN AIRLINES, INC.*
3375 Koapaka Street, Suite G-350
Honolulu Hawaii
USA 96819
Tel: +1 (808) 838-6081
E-mail: robert.lamansky@hawaiianair.com

Ms. William Chan
General Manager, Distribution and Planning
HONG KONG AIRLINES LIMITED*
7/F One Citygate 20
Tat Tung Road
Hong Kong
Hong Kong (SAR), China
Tel: +852 3151 1826
E-mail: william.chan@
hongkongexpress.com

Mr. Mostafa Ahmadi
Sr. Manage, Flight Scheduling
IRAN AIR THE AIRLINE OF ISLAMIC REPUBLIC OF IRAN*
Mehrabad Airport
Tehran
Iran 11369
Tel: +98 (21) 4662 6592
E-mail: ahmadi@iranair.com

Mr. Makoto Kawaguchi
Assistant Manager
JAPAN AIRLINES CO., LTD.*
4-11, Higashi-Shinagawa 2-Chome
Higashi-Shinagawa
Tokyo
Japan 1408637
Tel: +81 (3) 5460 3765
E-mail: makoto.kawaguchi@jal.com

Mr. Djordje Najdanovic
Head of Planning & Scheduling Dept.
JAT AIRWAYS*
Bulevar Umetriosti 16
Belgrade
Serbia 11070
Tel: +381 (11) 2098 488
E-mail: cp_scheduling@jat.com

Mr. Jitendra H. Ghaissas
Manager - RM Systems Scheduling & Code Share
JET AIRWAYS (INDIA) LIMITED*
Siroya Centre
Sahar Airport Road
Mumbai Maharashtra
India 400059
Tel: +91 (22) 612 1 1742
E-mail: jghaissas@jetairways.com

Mr. Oleg Shubin
Chief Manager For Intl Ops and Ground Handling
JOINT STOCK COMPANY "URAL AIRLINES"
1G Utrenniy
Ekaterinburg
Russian Federation 620025
Tel: +7 (343) 278 5558
E-mail: o.shubin@u6.ru

Mr. Beatrice Nandwa
Manager Schedules Planing
KENYA AIRWAYS*
P.O. Box 19002
Nairobi
Kenya
Tel: +254 (20) 642 2928
E-mail: beatrice.nandwa@kenta-airways.com

Mr. H. J. Zwitser
Schedules Publications
KLM ROYAL DUTCH AIRLINES*
P.O. Box 7700
Schiphol Airport
Amsterdam
Netherlands 1117
Tel:—
E-mail: amsmhkl@klm.com

Ms. Sunyoung Nam
Passenger IT Support
KOREAN AIR LINES CO. LTD.*
1370, Gong Hang-Dong
Kang Seo-Gu
Seoul
Korea, Republic of 139723
Tel: +82 226567305
E-mail: sunynam@koreanair.com

Mr. S. Al Rashoud
Manager. Ground Handling Agreements
KUWAIT AIRWAYS*
Kuwait International Airport
P.O. Box 528
Safat
Kuwait 13006
Tel:—
E-mail: alameeri@kuwait-airways.net

Mr. Rajesh Jani
Network, Scheduling, Planning & Chater Manager
LAM—LINHAS AEREAS DE MOCAMBIQUE*
P.O. Box 2060
Mavalane Airport
Maputo
Mozambique 2060
Tel:—
E-mail: rjani@lam.com.fz

Mrs. Manolack
Space Control Manager
LAO AIRLINES
02 Pangkham Road
P.O. Box 6441
Vientiane
Lao People's Democratic Republic
Tel:—
E-mail: manolack.space@laoairlines.com

Mr. Veronica Cortez
Scheduling Manager
LINEAS AEREAS COSTARRICENSES S.A. (LACSA)*
Ofcinas LACSA - La Sabana
San Jose
Costa Rica 10109
Tel: +1 (503) 2247 2140
E-mail: veronica.cortez@aviancataca.com

Mr. Slawomir Rosinski
MCT Manager
LOT—POLISH AIRLINES*
39, 17 Stycznia Str.
Warsaw
Poland 00-906
Tel: +48 (22) 6068307
E-mail: s.rosinski@lot.pl

Mr. Nik Mohd Roseli
Manager Airport Operations Control
MALAYSIA AIRLINE SYSTEM BERHAD*
4th Floor, Main Terminal Building
Kuala Lumpur Internationl Airport
Kuala Lumpur
Malaysia 64000
Tel: +603 0196680081
E-mail: nikrosel@malaysiaairlines.com

Ms. Vicky Lin
Assistant Manager
MANDARIN AIRLINES LTD.
13th Floor
134 Minsheng E. Road, Sec. 3
Taipei
Chinese Taipei 104
Tel:—

Ms. Jordan Wood
MCt Coordinator
MULTI-AERO, INC. DBA AIR CHOICE ONE
123000 Old Tesson Road
Suite 200 F
St- Louis Missouri
USA 63128
Tel: +1 (314) 843 8501
E-mail: jwood@airchoiceone.com

Mr. Tanka Nidhi Dahal
In-Charge Schedule
NEPAL AIRLINES CORPORATION
RNAC Building Kanti Path
Kathmandu
Nepal 44600
Tel: +977 (1) 4220757
E-mail: schedule@nac.com.np

Mr. Saleem S.H.
Agency Coordinator
OMAN AIR (S.A.O.C)*
P.O. Box 58, Code 111
Seeb International Airport
Muscat
Oman
Tel:—
E-mail: salim.sh@omanair.com

Mr. Gabriel Kimbrell
President
PACIFIC WINGS, L.L.C.
5950 Berkshire Ln. Ste.800
Dallas Texas
USA 75225
Tel: +1 (888) 575-4546
E-mail: gkimbrell@pacificwings.com

Mr. Anjum Amin Mirza
General Manager Schedules, Hajj & Charters Plannin
PAKISTAN INTERNATIONAL AIRLINES*
Marketing Department
CRC Building, Karachi Airport
Karachi
Pakistan
Tel: +1 (888) 575-4546
E-mail: khisppk@piac.aero

Suzette Kugler
System Support and Services
PENAIR
6100 Boeing Avenue
Anchorage Alaska
USA 99502
Tel: +1 (907) 771-2594
E-mail: suzettek@penair.com

Ms. Myrna R. dela Cruz
Manager-Airport Planning & Standards
PHILIPPINE AIRLINES, INC.*
4th Floor, Rotunda Building
NAIA Centennial Terminal 2
Pasay City
Philippines 1300
Tel: +632 879 6025
E-mail: myrna_delacruz@pal.com.ph

Mr. Ian Crowe
Manager Schedule Distribution
QANTAS AIRWAYS LTD.*
Qantas Centre, Building A
203 Coward Street - Mascot
Sydney New South Wales
Australia 2020
Tel:—

Joachim Lobo
Senior Manager Scheduling
QATAR AIRWAYS(Q.C.S.C)*
Qatar Airways Towers
P.O. Box 22550, Airport Road
Doha
Qatar
Tel: +974 444 96260
E-mail: jlobo@qatarairways.com.qa

Sophie Clemence
Head of Schedule and Dispatching Department
REGIONAL COMPAGNIE AERIENNE EUROPEENNE
Aeroport Nantes Atlantique
Bouguenais cedex
France 44345
Tel: +33 (2) 40 13 52 18
E-mail: sclemence@regional.com

Mr. Robert Westgate
Scheduling Director - Planning and Scheduling
REPUBLIC AIRLINE INC..
7001 Tower Road
Denver Colorado
USA 80249
Tel: +1 (720) 374 4393
E-mail: robert.westgate@flyfrontier.com

Mr. Idriss Ben Kirane
Scheduling Director
ROYAL AIR MAROC*
Aeroport De Casa-anfa
Casablanca
Morocco
Tel:—
E-mail: ibenkirane@royalairmaroc.com

Ms. Rita Qawwas
Director Scheduling
ROYAL JORDANIAN (ALIA—THE ROYAL JORDANIAN AIRLINE)*
P.O. Box 302
Mohammad Ali Janah Street Building No. 37
Amman
Jordan 11118
Tel: +962 (6) 520 2415
E-mail: rjskd@rj.com

Mr. Akash Raj
Head of CRC & Interlime
SAFI AIRWAYS LTD.*
Kabul City Centre, 1st Floor, F- 27
P.O. Box 630
Ansari Circle
Afghanistan
Tel: +971 (4) 299 8890
E-mail: akash.raj@safiairways.aero

Mr. Filipe Raposo
Schedule Planning Manager
SATA—AIR ACORES*
Av. Infante Henrique 55-2
Ponta Delgada Acores
Portugal 9500
Tel: +351 296 209 767
E-mail: filipe.raposo@sata.pt

Mr. Riyadh M. Alzahrani
DCS Development Specialist
SAUDI ARABIAN AIRLINES*
P.O. Box 620
Jeddah
Saudi Arabia 21231
Tel: +966 (2) 686 7300
E-mail: riyadh@saudiairlines.com

Ms. Susanne Karlsson
System Specialist
SCANDINAVIAN AIRLINES SYSTEM (SAS)*
Lufthavnsbouldevarden 14
Kastrup
Denmark DK 2770
Tel: +45 (3) 232 2714
E-mail: cphru.specialistteam@sas.dk

Ms. Rachel Tan
Assistant Manager Network Planning
SINGAPORE AIRLINES LIMITED*
08C Airline House, 25 Airline Road
Singapore
Singapore 819829
Tel: +65 654 156 14
E-mail: huiqin_tan@singaporeair.com.sg

Mr. Thusitha Ramasinghe
Schedules Planning Manager
SRILANKAN AIRLINES LIMITED*
Level 22, East Tower WTC Building
Echelon Square, Colombo 1
Colombo
Sri Lanka 00100
Tel: +94 (197) 331 396
E-mail: thusithaw@srilankan.aero

Ms. Margareta Pluess
Schedule Distribution, MCT Coordination & Availabi
SWISS INTERNATIONAL AIR LINES LTD DBA SWISS*
ZRHLX/KRDC-PLUM
Zurich
Switzerland CH 8058
Tel: +41 (44) 564 8745
E-mail: margareta.pluess@swiss.com

Ms. Nadia Awad
Schedules Manager
SYRIAN ARAB AIRLINES*
P.O. Box 417
Damascus
Syrian Arab Republic
Tel: +963 (11) 446 72 172
E-mail: awad_nadia@yahoo.com

Mr. Antonio Paulo da Silva
Deputy Director Network and Commercial Planning
TAAG—LINHAS AEREAS DE ANGOLA (ANGOLA AIRLINES)*
Rua Missao 123, P.O. Box 79
Luanda
Angola
Tel: +244 (222) 392 833
E-mail: paulo.silva@flytaag.com

Stations Management
Passenger & Baggage Handling Proc.
TAP—AIR PORTUGAL*
Apartado 50194
1704-801
Lisbon Codex
Portugal 1704-801
Tel: +351 (21) 841 5000
E-mail: stations.management@tap.pt

Mrs. Lek Klinvibul
Vice President, Ground Customer Services Departmen
THAI AIRWAYS INTERNATIONAL PUBLIC COMPANY LTD.*
P.O. Box 1075
89 Vibhavadi Rangsit Road
Bangkok
Thailand 10900
Tel:—
E-mail: lek.k@thaiairways.com

Mr. Warren Crotty
Mgr. Revenue Mgmt.
TRANS STATES AIRLINES, INC.
11495 Navaid Road, Ste #340
Bridgeton Missouri
USA 63044
Tel: +1 (314) 222-4315
E-mail: wcrotty@transstates.net

Mr. Michael Shchadinskiy
Head of Reservation Control
TRANSAERO AIRLINES*
11A, Zubovsky Boulevard
Moscow Perm Region
Russian Federation 119021
Tel: +7 (495) 9378458
E-mail: kbr_mps@transaero.ru

Mr. Phillip Britt
Schedule Change Operations
TRAVELPORT GLOBAL DISTRIBUTION SYSTEM B.V.
200 Galleria Pkwy SE
Atlanta Georgia
USA 30339-5918
Tel: +1 (770) 563 7400
E-mail: phil.britt@travelport.com

Mr. Riadh Farhat
Manager of Network Planning & Resources
TUNISAIR*
Boulevard 7 November
Carthage
Tunis
Tunisia 2035
Tel: +216 (70) 837 000
E-mail: riadh.farhat@tunisair.com.tn

Mr. Seyyid Oztekin
Scheduling Manager
TURKISH AIRLINES INC.*
General Management Building
Ataturk Airport Yesilkoy
Istanbul
Turkey 34 830
Tel:—
E-mail: tarifesc@thy.com

MCT Co-ordination Team
UBM AVIATION—OAG
450, Capability Green
Luton Bedfordshire
United Kingdom LU1 3LU
Tel: +44 (01) 582-695050
E-mail: mctco-ordinators@oag.com

Mr. Ed Domaracki
Sr. Staff Planner. Schedule Publication
UNITED AIRLINES, INC.*
World Headquarters
P.O. Box 66100
Chicago Illinois
USA 60666
Tel: +1 (872) 825 9504
E-mail: edmund.domaracki@united.com

Mr. Dave Scott
Director, Current Schedules
US AIRWAYS, INC.*
CH-PLN
111 W Rio Salado Pkwy
Tempe Arizona
USA 85281
Tel: +1 (480) 693 5853
E-mail: dave.scott@usairways.com

Joe Thompson
GM Airline Planning
VIRGIN ATLANTIC AIRWAYS LIMITED*
Crawley Business Quarter
Manor Royal
Crawley West Sussex
United Kingdom RH10 9NU
Tel: +44 (1293) 448 077
E-mail: joe.thompson@flyvirgin.com

Ding Chungling
Schedules Office
XIAMEN AIRLINES*
22 Dailiao Road
Xiamen
People's Republic of China 361006
Tel: +86 (592) 5739 829
E-mail: ps_flt@xiamenair.com.cn

Mr. Ali Raza Mohamed Jaffer
Executive Director Customer Servuces & Ground Ops.
YEMENIA—YEMEN AIRWAYS*
Yemenia Head Office Building, Airport Rd
P.O. Box 1183
Sana'a
Yemen, Republic of
Tel: +967 (1) 258 024
E-mail: ali.jaffer@yemenia.com